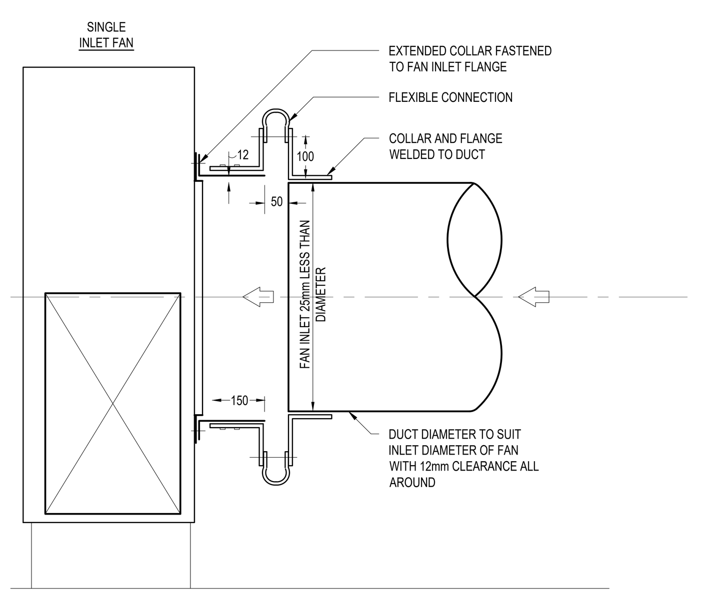

GENERAL NOTES:

1. FLEXIBLE CONNECTION TO PLUG, PLENUM, AXIAL & TUBULAR CENTRIFUGAL FANS SHALL BE SIMILAR.
2. DO NOT USE ON CONNECTIONS TO GREASE EXHAUST FANS

5 / M2 — FLEXIBLE CONNECTION TO SUCTION SIDE OF FAN
N.T.S.

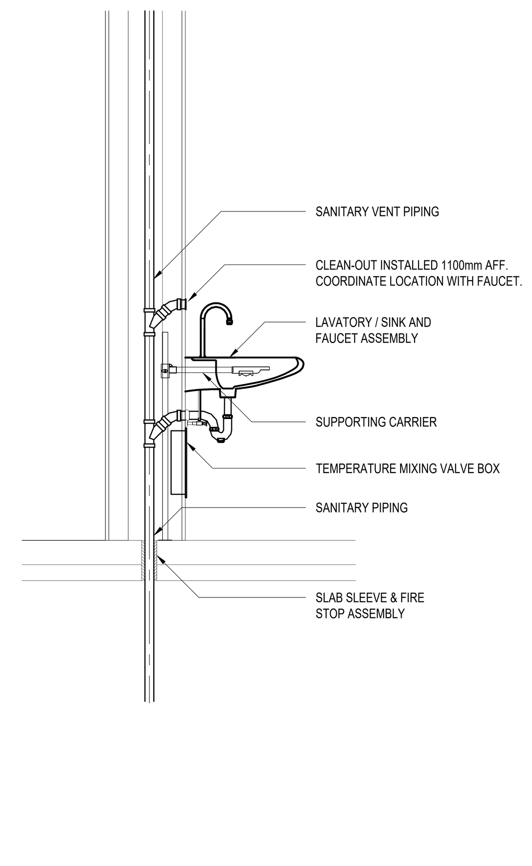

4 / M2 — LAVATORY - SINK INSTALLATION DETAIL
N.T.S.

GENERAL NOTES:

1. PIPING TO HEADER TYPE COILS TO BE SIMILAR.
2. WHEN SPECIFIED PRE-ASSEMBLED COIL PIPING CONSISTING OF:
   - SUPPLY - ISOLATION VALVE, STRAINER, TEMPERATURE/PRESSURE PORT, HOSE , AND UNIONS
   - RETURN - UNIONS, HOSE, TEMPERATURE/PRESSURE PORT, AUTOMATIC CONTROL VALVE, AND ISOLATION VALVE
3. TEST PLUG C/W CAP & GASKET TO HAVE NORTEC CORE
4. FLEXIBLE CONNECTORS SHALL ONLY BE INSTALLED IN A SINGLE PLANE - DO NOT USE AS AN ELBOW

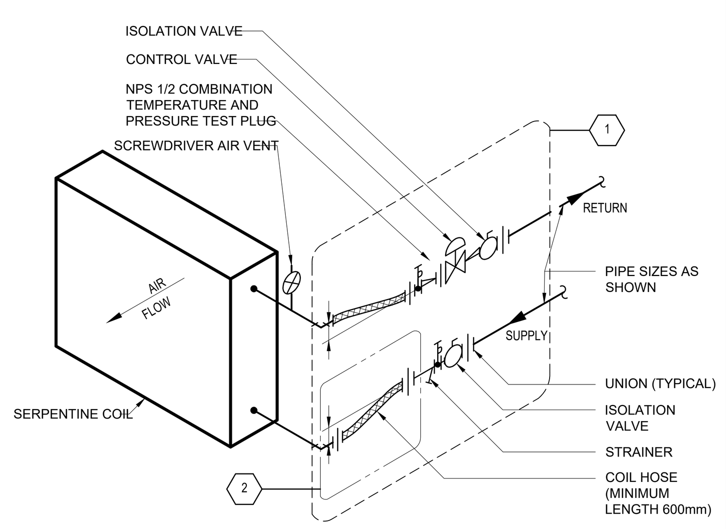

REFERENCE NOTES:

1. WHEN SPECIFIED PRE-ASSEMBLED COIL PIPING CONSISTING OF:
   - SUPPLY - ISOLATION VALVE, STRAINER, TEMPERATURE/PRESSURE PORT, HOSE , AND UNIONS
   - RETURN - UNIONS, HOSE, TEMPERATURE/PRESSURE PORT, AUTOMATIC CONTROL VALVE, AND ISOLATION VALVE
2. MAXIMUM HOSE OFFSET 25mm IN ANY DIRECTION

3 / M2 — DUCT MOUNTED COIL
N.T.S.

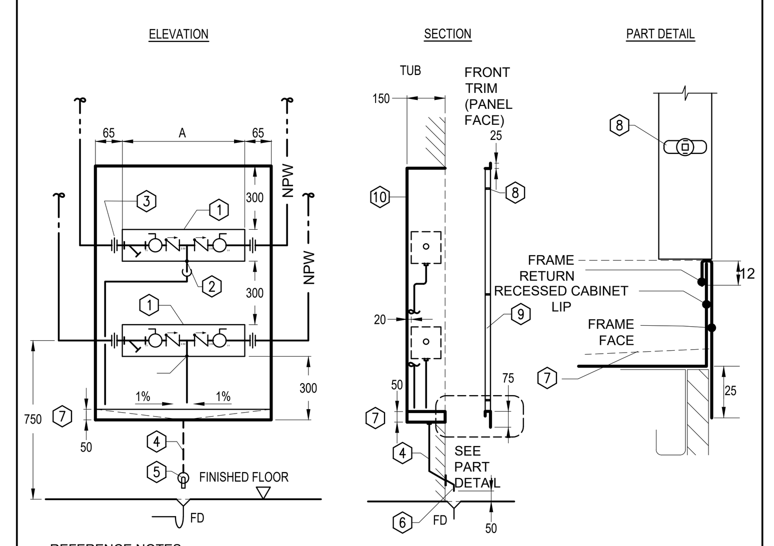

REFERENCE NOTES:

1. BACKFLOW PREVENTER (BFP) REDUCED ZONE PRESSURE TYPE.
2. DRAIN, SIZED PER BFP.
3. UNION (TYPICAL).
4. CABINET DRAIN NPS 1.
5. STAINLESS STEEL ESCUTCHEON.
6. CHROME PLATED NPS 1 ¼ WITH 45° WHISTLE CUT
7. 50 mm HIGH INTEGRAL DRAIN PAN.
8. SLOTWAY FOR FRAME ADJUSTMENT.
9. FACEFRAME RETURN, TOP AND BOTH SIDES. FASTENED TO INSIDE OF TUB.
10. SERVICE PANEL TUB, RECESSED IN WALL

GENERAL NOTES:

1. DIMENSIONS ON THIS DETAIL ARE APPLICABLE TO A SET OF 2 BACKFLOW PREVENTER (BFP) SIZE NPS ¼ TO 2. FOR NPS 2 ½ AND GREATER, REFER TO MANUFACTURER'S INFORMATION FOR DIMENSION 'A'.
2. FOR FREESTANDING INSTALLATION PROVIDE PAINTED STEEL SUPPORTING FRAME .
3. FOR INSTALLATION IN SERVICE ROOMS BFP CAN BE INSTALLED ON THE WALL WITHOUT CABINET.

2 / M2 — BACKFLOW PREVENTER ASSEMBLY IN CABINET
N.T.S.

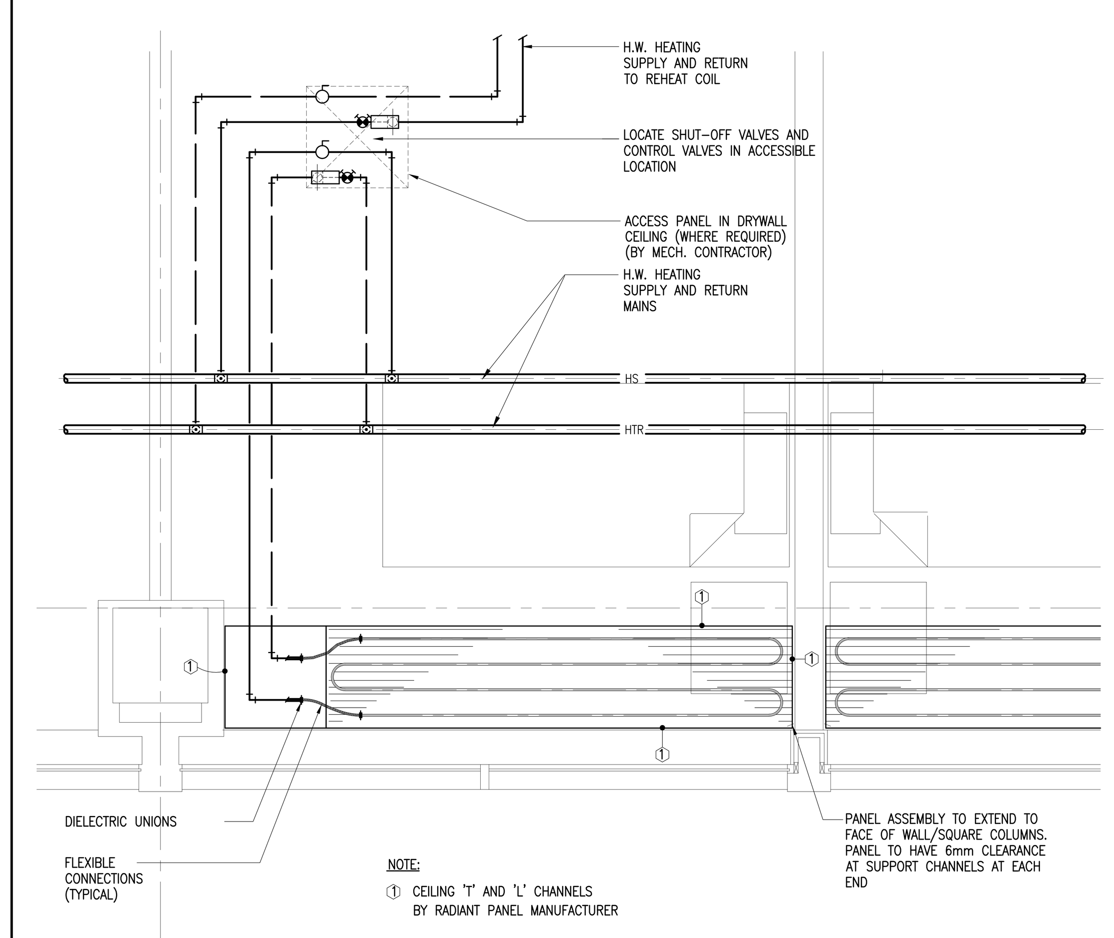

NOTE:

1. CEILING 'T' AND 'L' CHANNELS BY RADIANT PANEL MANUFACTURER

1 / M2 — TYPICAL INSTALLATION DETAIL FOR RADIANT PANELS
N.T.S.

NOTE:

1.) RADIANT PANELLS TO BE INSTALLED WALL TO WALL AND FIELD MEASURED. NOTCH PANELS TO ACCOMODATE COLUMNS AND CEILING GRID, ETC.
2.) CIRCUITING OF PANELS TO BE AS SHOWN BELOW. SUPPLY AND RETURN CAN BE ON SAME SIDE OF PANEL AS WELL.
3.) RUNOUTS TO RADIANT PANELS TO BE 20mm (NPS ¾") UNLESS NOTED OTHERWISE.

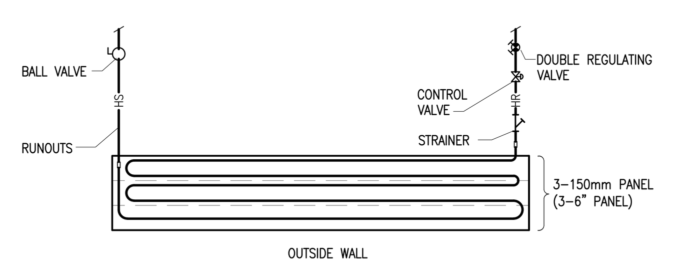

SCALE: N.T.S.

8 / M2 — TYPE 'B' RADIANT PANEL CIRCUITING (TYPICAL)
N.T.S.

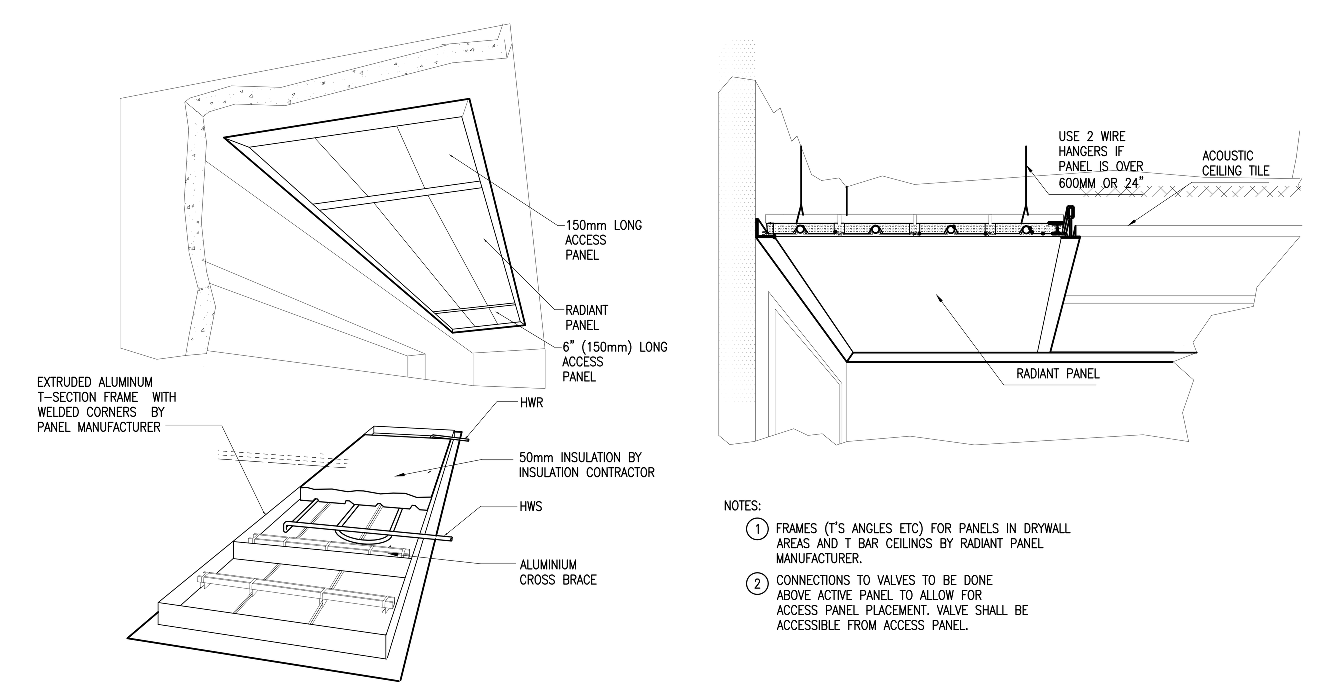

NOTES:

1. FRAMES (T'S ANGLES ETC) FOR PANELS IN DRYWALL AREAS AND T BAR CEILINGS BY RADIANT PANEL MANUFACTURER.
2. CONNECTIONS TO VALVES TO BE DONE ABOVE ACTIVE PANEL TO ALLOW FOR ACCESS PANEL PLACEMENT. VALVE SHALL BE ACCESSIBLE FROM ACCESS PANEL.

7 / M2 — RADIANT CEILING PANELS IN DRYWALL AND T-BAR CEILING (TYPICAL)
N.T.S.

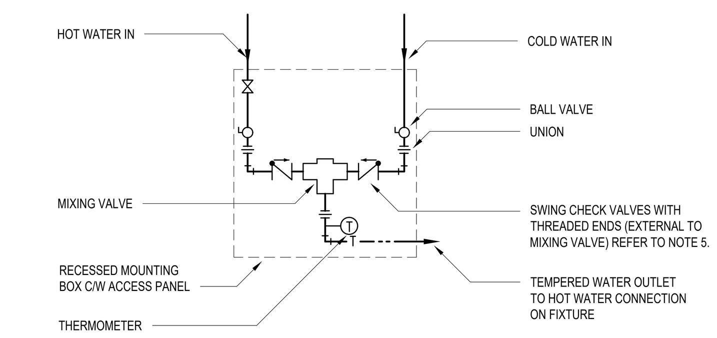

GENERAL NOTES:

1. THIS DETAIL IS TYPICAL FOR ALLFIXTURES SUPPLIED WITH TEMPERED WATER.
2. INSTALL VALVE IMMEDIATELY ABOVE REMOVABLE CEILING OR WITHIN ACCESSIBLE MOUNTING BOX BELOW FIXTURE.
3. SINGLE TMV DESIGNATED TO SERVICE MAXIMUM ONE SINK OR TWO LAVATORIES.
4. SET MIXER TO PROVIDE TEMPERED WATER TEMPERATURE AT FIXTURE AS SPECIFIED
5. CHECK VALVES ARE IN ADDITION TO ANY O.E.M CHECK VALVES PROVIDED WITH TMV.

6 / M2 — THERMOSTATIC MIXING VALVE ASSEMBLY
N.T.S.

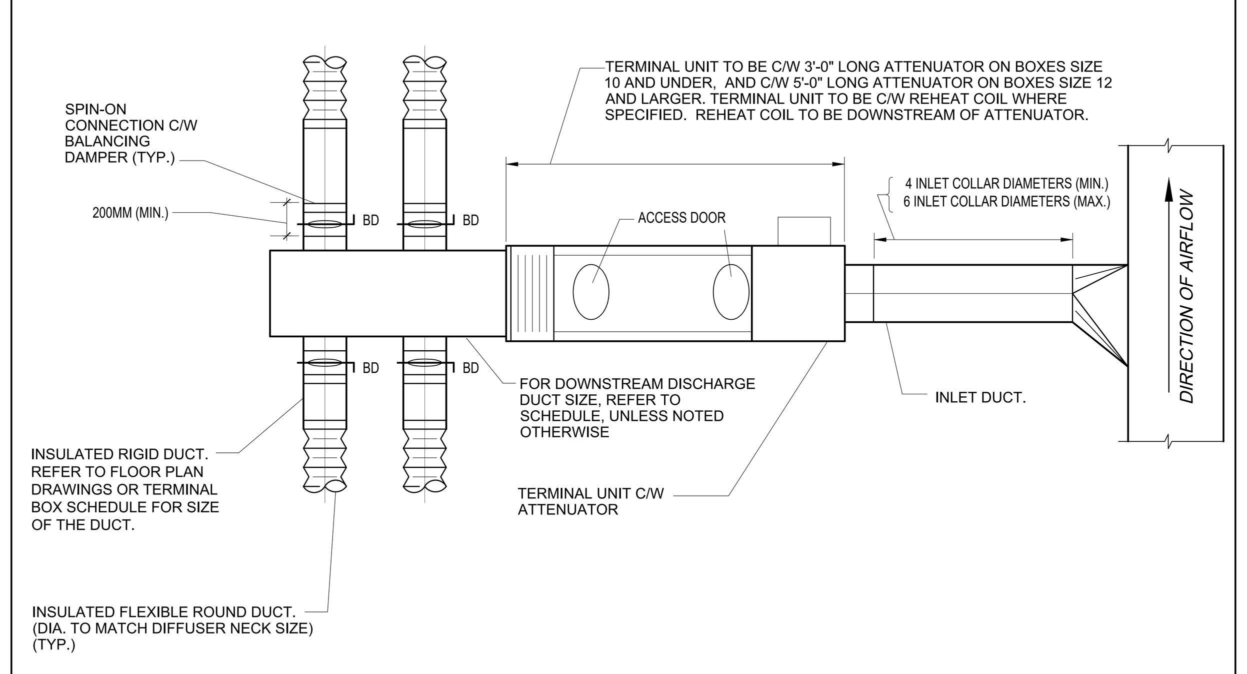

12 / M2 — TERMINAL UNIT (BOX) AND DUCT CONNECTION
N.T.S.

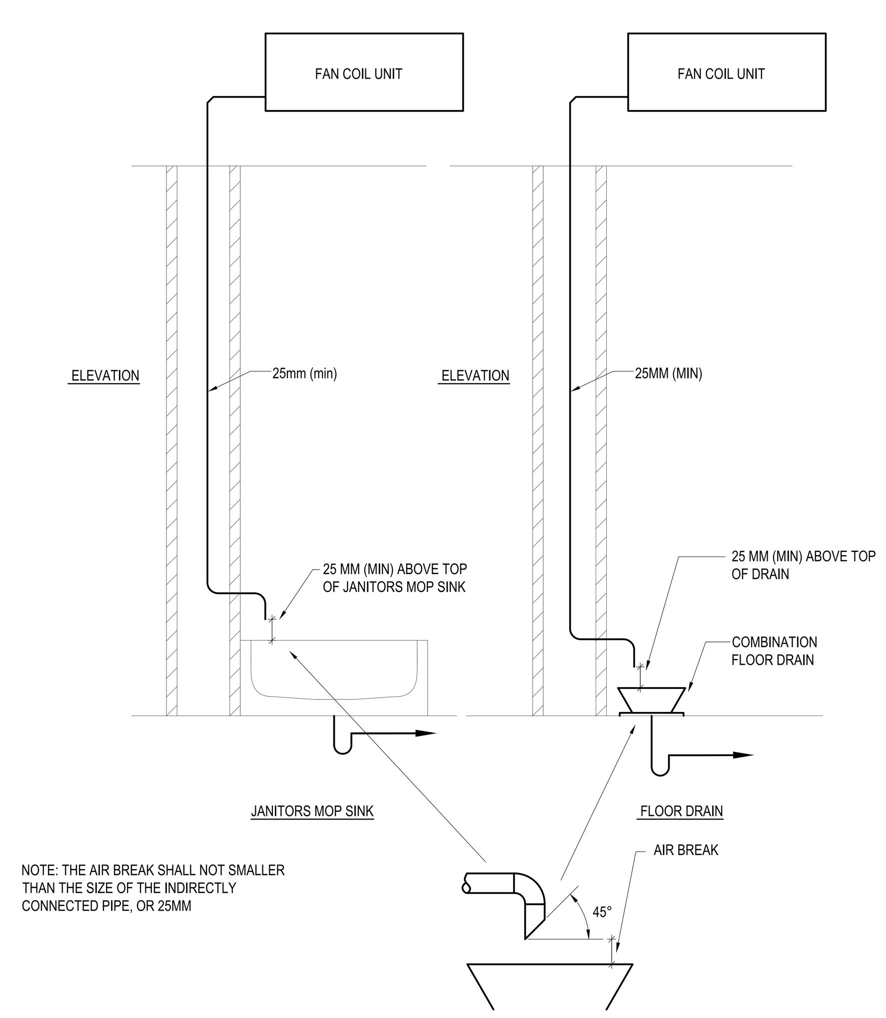

NOTE: THE AIR BREAK SHALL NOT SMALLER THAN THE SIZE OF THE INDIRECTLY CONNECTED PIPE, OR 25MM

11 / M2 — CONDENSATE DRAIN TYPICAL DRAINAGE AIR BREAK
N.T.S.

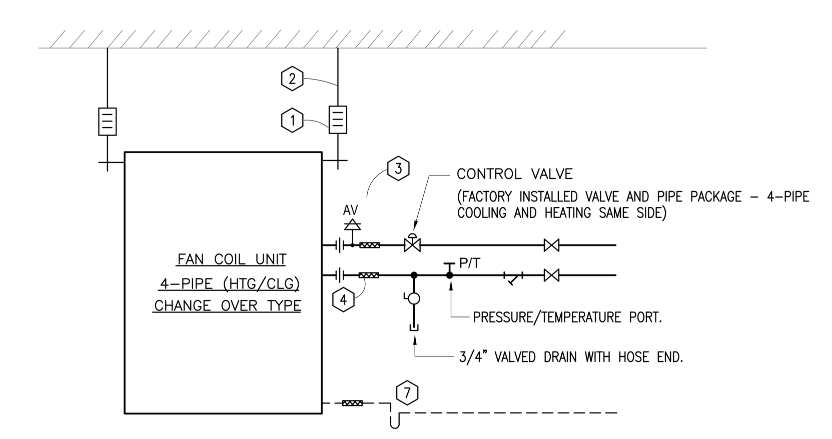

1. VIBRATION ISOLATOR. TYPICAL.
2. HANGER ROD
3. AUTOMATIC AIR VENT
4. FLEXIBLE PIPING CONNECTOR. TYPICAL.
5. CHILLED WATER LINES TO MAIN
6. CONDENSATE TO DRAIN (INDIRECT CONNECTION).
7. DRAIN TRAP

10 / M2 — PIPING CONNECTIONS TO FAN COIL UNIT
N.T.S.

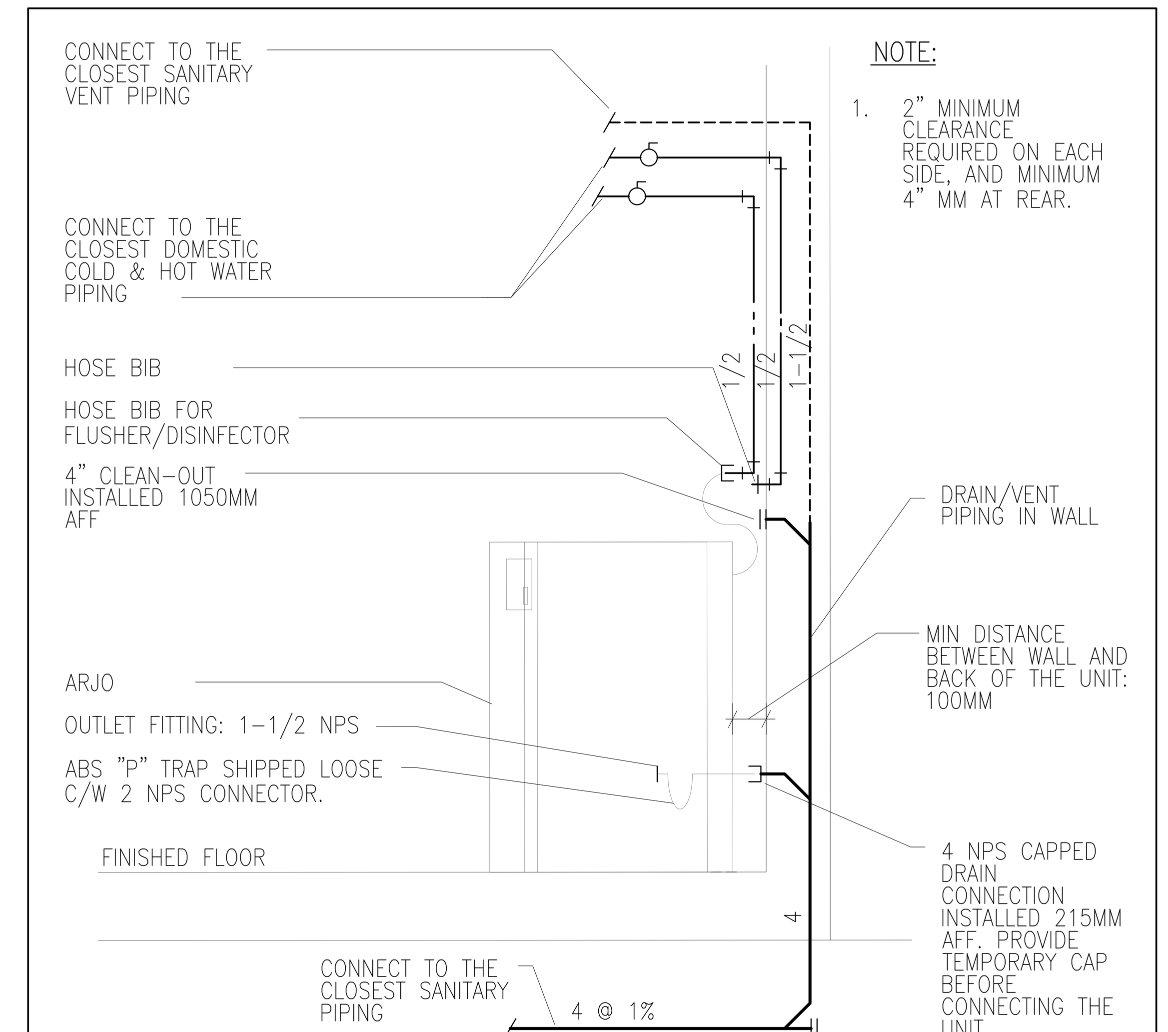

NOTE:

1. 2" MINIMUM CLEARANCE REQUIRED ON EACH SIDE, AND MINIMUM 4" MM AT REAR.

9 / M2 — BED PAN WASHER CONNECTIONS
N.T.S.

© 2022 The Cannon Corporation
All rights reserved. No part of this document may be reproduced or utilized in any form, without prior written authorization by The Cannon Corporation.

Waypoint — Advancing Understanding. Improving Lives.
CENTRE for MENTAL HEALTH CARE

TOANCHE
LEVEL 03 RENOVATIONS - STAGE 4

CANNONDESIGN
50 Fountain Plaza Suite 200
Buffalo, NY 14202
P: 716.773.6800
F: 716.773.5909
www.cannondesign.com

MULVEY & BANANI
90 Sheppard Avenue East, Suite 500, Toronto, ON M2N 3A1
416.751.2520 | MBII.COM

MULVEY & BANANI
Electrical Engineer
90 Sheppard Ave. E Suite 500
North York, ON M2N 3A1, Canada
416.751.2520

HHAngus
HH Angus & Associates Ltd
Mechanical Engineer
1127 Leslie St.
North York, ON M3C 2J6, Canada
416.443.8200

stephenson ENGINEERING
A SALAS O'BRIEN COMPANY
Stephenson Engineering Ltd
Structural Engineer
2550 Victoria Park Ave. #602
North York, ON M2J 5A9, Canada
416.635.9970

ISSUED FOR TENDER
18 DEC 2023
Ministry of Health Project Number# 205004

LICENSED PROFESSIONAL ENGINEER
2211105
E.D. SUDERMAN
100153710
2023/12/18
PROVINCE OF ONTARIO

Rev.	Description	Date
04	Issued for Tender	2023-12-18
03	Issued for Construction	2023-11-17
02	Issued for Stage 4 Submission	2022-11-23
01	Issued for 95% CD- QA/QC	2022-11-01

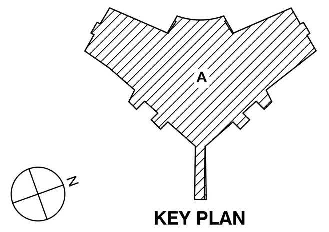

KEY PLAN

Drawing Title:

MECHANICAL DETAILS

Project No.: 020708.50 Checked by: ES

M2

© 2022 The Cannon Corporation