Engtec Consulting Inc.
2447 Anson Drive, Mississauga
Ontario, L5S 1G1
Tel: (905) 856-2988
Fax: (905) 856-2989

Assessment of Past Uses:
York Region North Road Operations Centre at 3525 Baseline Rd, Georgina, ON

Prepared For:
GEC Architecture on behalf of The Regional Municipality of York
430-179 John Street
Toronto, Ontario
M5T 1X4

Project Number:
ET24-1438B

Prepared By:

Engtec Consulting Inc.
2447 Anson Drive
Mississauga, Ontario
L5S 1G1
T : 1.905.856.2988
F : 1.905.856-2989
www.engtec.ca

Date Submitted:
March 11, 2025

Table of Contents

Description **Pages**

LEGAL NOTIFICATION 4
EXECUTIVE SUMMARY 5
1 INTRODUCTION 7
1.1 Project Team 7
1.2 Objective 7
1.3 Project Area Description 8
2 SCOPE OF INVESTIGATION 8
3 RECORDS REVIEW 9
3.1 General 9
3.1.1 First Developed Use Determination 9
3.1.2 Fire Insurance Plans and Property Underwriter's Report 9
3.2 Environmental Source Information 10
3.2.1 Federal and Provincial Database Search 10
3.2.2 Waste Disposal Sites 10
3.2.3 Inventory of Coal Gasification Plant Waste Sites in Ontario 10
3.2.4 Previous Reports 11
3.2.5 Municipal Records 11
3.2.6 Ontario Ministry of the Environment, Conservation and Parks (MECP) Records 11
3.2.7 Technical Standards and Safety Authority 11
3.2.8 Record of Site Condition 12
3.3 Physical Setting Source 12
3.3.1 Maps 12
3.3.2 Aerial Photographs 12
3.3.3 Fill Materials 14
3.3.4 Water Bodies and Areas of Natural Significance 14
3.3.5 Well Records 14
4 INTERVIEWS 15
5 SITE VISIT 15
5.1 Property Use 15
5.2 Buildings and Structures 15
5.3 Chemical Inventory, Storage and Handling 16
5.4 Special Attention Substances 16
5.5 Unidentified Substances 16
5.6 Drains and Sumps 16
5.7 Odor and Noise 16
5.8 Sewage and Wastewater Disposal 16
5.9 Liquid Chemical Waste Generation, Storage & Disposal 16
5.10 Water Courses, Ditches and Site Drainage 17
5.11 Abandoned and Existing Wells 17

5.12 Potable Water Sources 17
5.13 Fill Material 17
5.14 Stained Materials 17
5.15 Stressed Vegetation 17
5.16 Pits and Lagoons 17
5.17 Other Issues 17
5.18 Adjacent Properties 17
6 REVIEW AND EVALUATION OF INFORMATION 18
6.1 Potentially Contaminating Activities (PCAs) 18
6.2 Areas of Potential Environment Concern (APECs) 19
6.3 Contaminants of Potential Concern (CoPCs) 20
6.4 APU Conceptual Site Model (CSM) 20
7 CONCLUSIONS 21
8 QUALIFICATIONS OF ASSESSORS 22
9 QUALIFIED PERSON DECLARATION 22
10 REFERENCES 23
11 LIMITATIONS AND USE OF REPORT 24

Figures

Figure 1: Key Plan
Figure 2: Site Plan
Figure 3: Land use in APU study area
Figure 4: Potentially Contaminating Activities
Figure 5: Areas of Potential Environmental Concern
Figure 6: Existing Features and structure on the Site

Appendices

Appendix A: Site Photographs
Appendix B: ERIS Report
Appendix C: MECP and TSSA Correspondence

LEGAL NOTIFICATION

Assessment of Past Use for York Region North Road Operations Centre at 3525 Baseline Rd, Georgina, ON, (the "Site" and/or "Project Area"), was prepared by Engtec Consulting Inc. (Engtec) for the account of GEC Architecture on behalf of The Regional Municipality of York (the "Client").

This information and opinions expressed in the Report, or any document forming a part of the Report, are for the sole benefit of the Client or the consultant(s) and contractor(s) associated with current project. Any use which a third party makes of this report, or any reliance on or decisions to be made based on it, are the responsibility of such third parties unless a reliance letter has been addressed to, or otherwise provides reliance to, such third party. Engtec accepts no responsibility for damages, if any, suffered by any third party as a result of decisions made or actions based on this project.

EXECUTIVE SUMMARY

Engtec Consulting Inc. (Engtec) was retained by GEC Architecture on behalf of The Regional Municipality of York (the "Client") to complete an Assessment of Past Uses (APU) for York Region North Road Operations Centre at 3525 Baseline Rd, Georgina, Ontario, referred as the "Site" or the "Project Area". The Site is a polygon shaped property in Georgina, Ontario, with an area of 70,221 m^2 under industrial use. The APU was conducted to facilitate the management of excess soil that will be generated during potential extension of the existing Road Operation Centre building and related infrastructure, expansion of the baseline pond and the replacement of the existing gravel areas with new asphalt pavement at the Site. The Client estimated that approximately 11,272 m^3 of excess soil will be generated. Additionally, a surveyed stockpile with an estimated volume of 3,100 m^3 will be incorporated into the future proposed berm at the Site. The results of stockpile testing will be reported separately.It is Engtec's understanding that the APU is required to support excess soil management during the expansion work as per Ontario Regulation 406/19 – "On-Site and Excess Soil Management" (O.Reg.406/19) made under the Environmental Protection Act, R.S.O. 1990. C. E. 19, as amended (EPA).

The objective of the investigation was to identify any areas of potential environmental concern (APECs) that may have resulted in the presence of one or more contaminants that have affected soil or rock in a location where soil or crushed rock is to be excavated within the Site. This report was prepared by Engtec for the Client in accordance with the "Rules for Soil Management and Excess Soil Quality Standards", adopted by O. Reg. 406/19 made under the EPA. As a part of this assessment, general environmental conditions at the Site were reviewed with regards to their potential impacts on the environmental conditions at the Site. However, a detailed review of regulatory compliance issues was beyond the scope of this report. This APU does not indicate or identify any geotechnical conditions and geologic hazards at the Site.

Based on the reviewed data from the ERIS database, aerial photographs from previous reports, MECP database, and Site reconnaissance, four (4) APECs arising from seven (7) PCAs on Site were identified to be present on the Site and one (1) PCA on the surrounding property was identified and is not considered to result in an APEC due to significant distance from the excavation area.

Table 1 – Areas of Potential Environmental Concern

APEC#	PCA#	PCA no. per Table 2 O.Reg. 153	Location	Contaminants of Potential Concern (CoPC)
APEC#1	PCA#1	PCA#30 (Importation of Fill material of Unknown Quality during the construction of building on Site) - Development of building and installing underground utilities at Site	On Site	Metals and inorganics, Polycyclic Aromatic Hydrocarbons and Petroleum Hydrocarbons (PHCs) and Benzene, Toluene, Ethylbenzene and Xylenes (BTEX)

APEC#	PCA#	PCA no. per Table 2 O.Reg. 153	Location	Contaminants of Potential Concern (CoPC)
APEC#2	PCA#2	N/S (Application of de-icing agents) - Use of antifreeze chemicals or salt for winter maintenance	On Site	Electrical Conductivity (EC), and Sodium Adsorption Ratio (SAR)
APEC#3	PCA#5	PCA#28 (Gasoline and Associated Products Storage in Fixed Tanks)	On Site	PHCs/BTEX
APEC#4	PCA#7	PCA#52 (Storage, maintenance, fuelling and repair of equipment, vehicles, and material used to maintain transportation systems)	On Site	PHCs/BTEX

N/S – not specified in Table 2, Schedule D, O.Reg. 153/04

Based on the information obtained and findings of this Assessment of Past Uses (APU) conducted under the supervision of the Hammad Din P.Eng., QP ESA, four (4) APECs were identified for the Site based on the review of current and historical Site use, surrounding properties within the APU study area. Engtec's QP recommends further sampling to be conducted at the Site to characterize the subsurface soils and identify any potential or actual impacts from the identified CoPCs resulting due to APECs and PCAs. Therefore, a sampling and analysis plan and a soil characterization report are required to be prepared to meet the requirements of O. Reg. 406/19.

1 INTRODUCTION

Engtec Consulting Inc. (Engtec) was retained by GEC Architecture on behalf of The Regional Municipality of York (the "Client") to complete an Assessment of Past Uses (APU) for York Region North Road Operations Centre at 3525 Baseline Rd, Georgina, Ontario, referred as "the Site" or "the Project Area". The Site is a polygon shaped property in Georgina, Ontario, with an area of 70,221 m^2 under industrial use. The APU was conducted to facilitate the management of excess soil that will be generated during potential extension of the existing Road Operation Centre building and related infrastructure, expansion of the baseline pond and the replacement of the existing gravel areas with new asphalt pavements at the Site. The Client estimated that approximately 11,272 m^3 of excess soil will be generated. Additionally, a surveyed stockpile with an estimated volume of 3,100 m^3 will be incorporated into the future proposed berm at the Site. The results of stockpile testing will be reported separately. It is Engtec's understanding that the APU is required to support excess soil management and to identify the areas of potential environmental concern during the expansion work as per Ontario Regulation 406/19 – "On-Site and Excess Soil Management" (O.Reg.406/19) made under the EPA.

An APU Report is a systematic qualitative process to assess the environmental condition of a site based on its historical and current uses. This APU was conducted in accordance with O.Reg. 406/19 made under the EPA and the document entitled "Rules for Soil Management and Excess Soil Quality Standards," adopted by reference in O.Reg. 406/19 (Soil Rules), and in accordance with generally accepted professional practices.

1.1 Project Team

The following table contains the contact details for the Project Leader for this Project and Engtec's QP and the Project team.

Project Leader	**The Regional Municipality of York**
Project Manager	GEC Architecture 430-179 John Street |Toronto, Ontario, M5T 1X4 C: +1.647.749.3388 | Email: angela.ng@gecarchitecture.com
Qualified Person (QP)	Hammad Din, P.Eng., QP ESA Engtec Consulting Inc. | 1-2447 Anson Dr., | Mississauga, ON, L5S 1G1. t: +1.905.856.2988 | m: +1.647.825.6372 | Email: hammad.din@engtec.ca
Senior Environmental Specialist	Sandeep Kaur Engtec Consulting Inc. | 2447 Anson Dr., | Mississauga, Ontario, L5S 1G1 t: +1.905.856.2988 | m: +1.416.272.8465 | Email: sandeep.kaur@engtec.ca

1.2 Objective

The objective of the investigation was to identify any areas of potential environmental concern (APECs) that may have resulted in the presence of one or more contaminants that have affected soil or rock in a location where soil or crushed rock is to be excavated within the Site in accordance with O. Reg. 406/19.

1.3 Project Area Description

The Site, located at 3525 Baseline Road in Georgina, Ontario, is a polygon-shaped property covering an area of 70,221 m². It is designated for industrial use, with adjacent properties primarily designated for agricultural use. The Site area is approximately 7.11 ha. The Site consists of six (6) building structures on the property, including existing salt storage stockpile, existing garage shed, refueling station, and office building. The site includes a pond located on the northern side of the Project Area and a gravel area near the central line of the Project Area.

Based on the toporama map, the existing ground surface at the site is sloped towards the northeast side towards the Baseline Road with elevation mostly ranging between 260 m to 250 m. No Record of Site Condition (RSC) has been filed for the Site. Groundwater flow inferred to the northeast towards Lake Simcoe.

For the purpose of this APU, a 250 m search radius from the perimeter of the Site was considered. The Site is a property owned by The Regional Municipality of York. The co-ordinates of the Site are as follows:

- North Boundary: 17 T 626027.79 m E, 4905364.45 m N
- South Boundary: 17 T 626132.95 m E, 4904997.75 m N

2 SCOPE OF INVESTIGATION

The scope of work for the APU consisted of the following activities to determine the presence of potentially contaminating activities ('PCAs') that would result an area of potential environmental concern ('APEC') within the Site, where soil or crushed rock will be excavated:

Review historical records and documentation available for the Project Area or the Site (with 250 m APU study area) that included, but was not limited to, the following where available:

  - Publicly available aerial photographs and online aerial imagery;
  - Previous reports completed within the study area that were provided by the Client;
  - An Environmental Risk Information Services (ERIS) report consisting of a search of all databases within a 250 m search radius from the perimeter of the Site;
  - Topographic and geologic maps;
- Interview(s) to obtain information to about the current and former uses of the Site;
- Conduct a visual reconnaissance of the Site and APU Study Area;
- Review and evaluate information gathered form the record review, interviews, available previous reports, and Site visit;
- Prepare an APU Report including Conceptual Site Model (CSM), identified Potentially Contaminating Activities (PCA), Areas of Potential Environmental Concern (APECs), and Contaminants of Potential Concern (CoPC).

In completing this scope of work, Engtec did not conduct any intrusive investigations, including sampling, analyses or monitoring of materials. In addition, general environmental management and housekeeping practices were reviewed as part of this assessment insofar as they could impact the environmental condition of the property; however, a detailed review of regulatory compliance issues was beyond the scope of this investigation.

Engtec personnel who conducted assessment work for this Project included Sandeep Kaur M.E.S., and Hammad Din, P.Eng., QP ESA. An outline of their qualifications is provided in Section 8.

3 RECORDS REVIEW

The APU did not include any city directory searches, and title searches as these sources were not considered by the Qualified Person to provide significant information regarding the past uses beyond that provided by the records indicated above.

No data gap is anticipated by QP and sufficient information to comply with O.Reg. 406/19 will be obtained from ERIS reports and historical aerial photos. The general objectives of the Assessment of Past Uses (APU) will be met with the completion of this report.

3.1 General

3.1.1 First Developed Use Determination

Based on the information gathered from the reviewed aerial photographs from previous reports, the earliest record of aerial photograph shows the development of the Site in 2002, with surrounding land being used for agricultural purposes. However, from 1954 to 2002, the Site and the surrounding properties were primarily designated for agricultural land use.

Based on the Site development, as per Table 2, O.Reg., 153/04, PCA#30: Importation of Fill Material of Unknown Quality related to importation of fill material of unknown quality during construction of the road and building structure is identified as a PCA resulting in an APEC for the Site.

3.1.2 Fire Insurance Plans and Property Underwriter's Report

Based on the search conducted by ERIS on September 17, 2024, for the records of Canadian Underwriter's Association Fire Insurance Plans (FIPs) for the Project Area and the surrounding properties within the APU Study Area by OPTA Information Intelligence (OPTA) no FIPs were found for the Project Area.

3.2 Environmental Source Information

3.2.1 Federal and Provincial Database Search

A search of provincial and federal databases for records pertaining to the Site and APU Study Area was conducted by EcoLog ERIS on September 17, 2024. Engtec has confirmed neither the completeness nor the accuracy of the records that were provided. It is noted that unplottable results provided by ERIS were not included due to the inability to determine the location of the activities. A copy of ERIS report is provided in Appendix B, based on the findings of the ERIS report no records were identified for the Project Area and the APU study area except following:

The ERIS report identified two (2) records of delisted fuel tanks, four (4) historic fuel storage tanks, fourteen (14) Ontario Regulation 347 waste generators summary, one (1) pipeline incident, five (5) Ontario spills, and three (3) waters well records on-site in the APU Study Area with the most common stratigraphy described as greyish brown/red clay, sand, and loam. These well records do not represent any associated PCAs resulting into APECs.

Thus, PCA's associated waste generation for over 20 years generating petroleum distillates, light fuels, halogenated pesticides, waste oils and lubricants, organic and inorganic laboratory chemicals, aliphatic solvents, paint/pigment/coating residues, oil skimming & sludges and PCBs was identified to be resulting into an APEC as per the federal and provincial database search.

Five (5) records of spills were identified by the ERIS database search. In 2013, natural gas (methane) of an unknown quantity was spilled into the air. In 2017, air pollution was caused by an Enbridge pipeline being struck by a tractor due to operator error. In the same year, an unknown quantity of natural gas (methane) was released into the atmosphere because of operator error. In 2021, 250 L of non-PCB transformer oil was spilled on land due to operator error, and 1,800 L of brine water leaked from a tanker, also caused by operator error. Incidents of spills were recorded on the surrounding properties. In 2017, 65 L of alcohol leaked onto the pavement from a drum or container due to equipment failure. In 2023, a minor spill occurred because of the overflow of a 2,000 L diesel fuel tank. The diesel spill was promptly cleaned up, was located outside the future excavation area, and is not considered an APEC for this APU.

3.2.2 Waste Disposal Sites

According to the Ecolog ERIS report, no waste disposal facilities were identified at the Site and APU Study Area.

3.2.3 Inventory of Coal Gasification Plant Waste Sites in Ontario

According to the Ecolog ERIS report, no coal gasification plants and/or coal tar sites were identified at the Sites or within the APU Study Area.

3.2.4 Previous Reports

One (1) previous geotechnical investigation report was made available to Engtec at the time of this APU report.

- A report titled "Geotechnical Investigation for Maintenance Building Expansion at Road Operations Centre at 3525 Baseline Road, Regional Municipality of York, Ontario." prepared by Engtec Consulting Inc. in 2023 for The Regional Municipality of York, was reviewed and following was noted:
    - Total ten (10) boreholes were advanced on Site using a track mounted drill rig. The subsurface soil profile consisted of surficial (gravel/asphalt) cover underlain by compact to very dense sandy silt till to the depth of termination.
    - The boreholes were advanced up to the depth of 2.0 m to 4.5 meter below grade (mbgs) using D-50 truck-mount drill rig.
    - The fill comprises predominantly of sand and gravel. Traces of silt and debris were found in the fill material. The granular fill thickness may vary with locations at the site. The recorded SPT N-values (blows/0.3m) mostly ranged from 25 blows/0.3m to greater than 50 blows/0.3m.Groundwater was encountered for all boreholes at depth ranging from 2.1 mbgs to 4.3 mbgs.

3.2.5 Municipal Records

According to the Ecolog ERIS report, no municipal records were available for the Site or APU Study Area.

3.2.6 Ontario Ministry of the Environment, Conservation and Parks (MECP) Records

On September 12, 2024, a request for information was submitted to the MECP Freedom of Information, Protection of Privacy Office for information in their files regarding the Site that pertain to any Environmental Concerns, Orders and Spills.

The MECP Response for the Site was received on March 11, 2025. No additional records were identified for the Site in addition to the ones already referenced in this report.

A copy of the MECP records and Record Release Letter is included in Appendix C.

3.2.7 Technical Standards and Safety Authority

The Technical Standards and Safety Authority (TSSA) is the Provincial regulatory agency responsible for overseeing the storage of fuels in Ontario. As such, the TSSA maintains a database (approximately 1987 to present) of all registered fuel storage tanks in Ontario. A request for tank search was made to TSSA on May 10, 2024, for the Project Area and the properties in the APU Study Area.

The TSSA identified five (5) active fuel records and two (2) expired records of the propane tanks for the Site. The tanks are present on -Site and consist of private fuel outlet (self-serve). Based on the database

information given by TSSA, the fuel records contribute to PCA#28 (Gasoline and Associated Products Storage in Fixed Tanks) (specified in Table 2, Schedule D, O.Reg. 153/04), which will result in Contaminants of potential concerns (CoPC) like Petroleum Hydrocarbons (PHCs), Benzene, Toluene, Ethylbenzene, and Xylenes (BTEX). The e-mail correspondence with the TSSA is presented in Appendix C.

3.2.8 Record of Site Condition

A Record of Site Condition (RSC) summarizes the environmental conditions of a property as determined by a qualified person (QP) by conducting a Phase I ESA, and where necessary, a Phase II ESA, confirmatory sampling, and a risk assessment. Upon completion of the necessary environmental Site assessments, an RSC for an assessed property can be filed with the MOECC and added to the Environmental Brownfields Site Registry database. This online, publicly available database can be searched to identify what properties may have potential environmental concerns.

Based on a search of the Environmental Brownfields Site Registry database and ERIS Report, there is no RSC registered for the Site.

3.3 Physical Setting Source

3.3.1 Maps

The following maps were reviewed for the Site:

- Topographic Map available at the Natural Resources Canada (NRC) website http://atlas.nrcan.gc.ca/site/english/maps/topo/map
- "Bedrock Geology of Ontario, Southern Sheet," Ontario Geological Survey, MDR126-REV1. Scale 1:250,000. Issued 2011.
- "Quaternary Geology, Seamless coverage of the Province of Ontario"; Data Set 14 - Revised, Scale 1: 1,000,000 Issued 2000.

The review of these maps for the Site indicated the following:

- The Site and surrounding areas slope to the north to northeast. Lake Simcoe is approximately 4 km north of the Site. Groundwater flows towards the northeast direction towards Lake Simcoe.
- The Site and surrounding areas belong to 13 Newmarket till which consists of Pleistocene deposits: sandy silt to silt matrix, moderate to high matrix carbonate content, clast content moderate to high.
- The bedrock in the general area of the Site is from Shadow Lake Formation, mostly comprised of Shale, limestone, arkose, dolostone, and sandstone.

3.3.2 Aerial Photographs

Aerial photographs for the Site dated 1954, 1970, 1978, 1988, 1995, 2007, 2018, and 2023 were obtained from the City of Toronto Interactive Archive Website (https://www.toronto.ca/archive), the York Region

General Interactive Map website (https://maps.york.ca) and/or Google Earth Pro. These photographs were accessed in order to review the land use history of the Site and surrounding area.

The land use history of the Site and adjacent properties, as depicted on the reviewed aerial photographs are summarized below.

Table 2 – Description of Aerial Photographs

Aerial Photograph	Details	PCA no. per Table 2 O.Reg. 153	
		Surrounding Property	Site
1954	• The Site appears to be agricultural; land in 1954. • The surrounding area are observed to be agricultural land.	• None Identified	• None Identified
1970	• The Site appears to be agricultural; land in 1970. • The surrounding area are observed to be agricultural land.	• None Identified	• None Identified
1978	• The Site appears to be agricultural; land in 1978. • The surrounding area are observed to be agricultural land.	• None Identified	• None Identified
1988	• The Site appears to be agricultural; land in 1988. • The surrounding area are observed to be agricultural land.	• None Identified	• None Identified
1999	• The Site appears to be agricultural; land in 1999. • The surrounding area are observed to be agricultural land.	• None Identified	None Identified

Aerial Photograph	Details	PCA no. per Table 2 O.Reg. 153	
		Surrounding Property	Site
2007	• Three (3) building structures on site appears to be developed in 2002. • The property appears to be used as industrial purposes. • One (1) building structure was developed in 2002 in northeast direction of the property.	• None Identified	• PCA#30 (Importation of Fill material of Unknown Quality during the construction of Site) • PCA#N/A • Use of antifreeze chemicals or salt for winter maintenance, (Application of de-icing agents)
2018	• Two (2) building structures appears to be developed in 2018, on northeast and southwest direction of the property. • No significant changes observed in the Site and the surrounding property/land use compared to 2007.	• None Identified	• PCA#N/A • Use of antifreeze chemicals or salt for winter maintenance, (Application of de-icing agents)
2023	• No significant changes observed in the Site and the surrounding property/land use compared to 2018.	• None Identified	• PCA#N/A • Use of antifreeze chemicals or salt for winter maintenance, (Application of de-icing agents)

3.3.3 Fill Materials

Given that the Site is developed before 2000's fill materials of unknown quality may be present underneath the Site, representing a PCA resulting in an associated APEC.

3.3.4 Water Bodies and Areas of Natural Significance

Based on the review of available resources from the Ministry of Natural Resources and Forestry (MNRF) website accessed on September 12, 2024, no areas of natural significance were identified for the Site and the APU Study Area.

3.3.5 Well Records

A search of the water well database was conducted by ERIS of the Site and surrounding APU Study Area for well records. There are three (3) observation/monitoring well records located in APU Study Area. These well

records do not represent any PCAs resulting in APECs in relation to the Project Area. According to the ERIS search, no oil, gas, or salt wells are located on Sites and or within the APU Study Area.

Based on the Ontario Well Records, three (3) well records pertaining to the Site were found with general stratigraphy as brown clay, and some sand.

No associated PCAs resulting into APECs were identified for the Site and APU Study Area based on the water well records.

4 INTERVIEWS

The Project Area appears to have been developed since 1999, with no change in the Site use. Therefore, interview was not conducted.

5 SITE VISIT

On September 24, 2024, Hammad Din, and Furqan Ghouri of Engtec conducted the Site Visit in accordance with Engtec's internal health and safety protocols and with the Ministry of Labour Health and Safety regulations. At the time of the Site visit, the weather was sunny with a few clouds and the recorded maximum temperature was 25^0 C. The purpose of the Site Visit was to assess the current conditions of the Site. The Site visit was conducted under the supervision and guidance of Hammad Din, P.Eng., QPESA as defined in O.Reg. 153/04. It is noted that chemicals are stored and used on Site. It was observed that ground surface is paved near the chemical storage, therefore it is not considered as PCA. There is no landfills and dumps on Site, and solid waste stored on Site is picked up by the waste management company, GFL Environmental Inc. Fluid filled transformers appeared to be stored on Site but were outside the excavation area. It is observed that hazardous waste is generated on Site, and HWIN number is ON 6695973. Surface water drains towards the catch basins on north side of the parking lot with two stormwater management ponds also observed on the norther portion of the Site. Natural gas is used for heating the building.

5.1 Property Use

The Site is a municipally owned industrial building and thus considered as a PCA with PCA#N/A: Use of antifreeze chemicals or salt for winter maintenance, (Application of de-icing agents).

5.2 Buildings and Structures

The Site is municipal building with five sheds on east, west, and south portions of the Site. It is constructed by using asphalt, granular fill and fill material (sand, gravel, silt). The surrounding areas of APU Study Area mostly consist of farmland. PCA related to importation of fill of unknown quality (PCA#30 - Importation of Fill material of Unknown Quality during the construction of Site) was noted for the Site. Building is currently used under industrial land use (Garage), therefore PCA#52 (Storage, maintenance, fueling and repair of equipment, vehicles, and material used to maintain transportation systems), will lead to APEC#4.

5.3 Chemical Inventory, Storage and Handling

As per the Ecolog ERIS report, no chemical inventory storage or handling is noted on the Site.

5.4 Special Attention Substances

During the Site visit, inspection was carried from the publicly accessible areas for the materials that may indicate the potential presence of the following material:

- Polychlorinated Biphenyls (PCBs), Asbestos Containing Materials (ACMs), Ozone Depleting Substances (ODSs), Lead, Mercury, Urea Formaldehyde Foam Insulation and Radon.

At the time of Site inspection, no evidence of the abovementioned materials was observed. However, based on the Site visit it was noted that transformers were present on the Site indicating the possibility of PCBs presence at the Site and considered as a PCA with PCA#55: Transformer Manufacturing, Processing and Use as per Table 2, O. Reg. 153/04. During the Site visit, bulk storage of salt in a stockpile is observed, which is PCA#48 (Salt Manufacturing, Processing and Bulk Storage) as per Table 2, O.Reg.153/04.

No other special attention substances (such as acrylonitrile or isocyanates) were suspected to be present at the Sites at the time of this site visit.

5.5 Unidentified Substances

No unidentified substances were present at the Site at the time of Site visit.

5.6 Drains and Sumps

No drains and sumps were noted to be present at the Site.

5.7 Odor and Noise

No chemical or other significant odors were detected at the time of the Site visit. No excessive noise was detected at the time of the Site visit.

5.8 Sewage and Wastewater Disposal

One (1) wastewater storage holding tank was noted on Site which was an underground holding tank drained regularly by a licenced waste contractor.

5.9 Liquid Chemical Waste Generation, Storage & Disposal

No liquid chemical waste generation, storage, and disposal was noted at the Site during the Site visit.

5.10 Water Courses, Ditches and Site Drainage

For a description of the nearest water bodies to the Site, refer to Section 3.3.

5.11 Abandoned and Existing Wells

Ontario Monitoring Well Registry shows a record of three (3) existing domestic water wells on Project area.

5.12 Potable Water Sources

The Site and its surrounding properties are connected to the municipal water system.

5.13 Fill Material

Based on observations made at the time of the Site visit, and information derived from the aerial photographs, it is expected that the Site may have fill material present brought in during the construction of the building or installation of underground utilities at the Site and during the construction of the building structures. This fill material represents a PCA resulting into an APEC relating to the Project Area PCA#30 (Importation of Fill material of Unknown Quality during the construction of building structure).

5.14 Stained Materials

Minor hydrocarbon like staining was observed underneath the diesel above ground storage tanks.

5.15 Stressed Vegetation

No stressed vegetation was observed at the Site during the Site visit.

5.16 Pits and Lagoons

No pits or lagoons were observed or reported at the Site at the time of the Site visit.

5.17 Other Issues

No other issues of potential environmental concern at the Site were identified during the Site visit.

5.18 Adjacent Properties

A visual reconnaissance of the Site and the APU Study Area from the publicly accessible areas to identify any PCAs that may be contributing to an APEC at the Site was conducted. During the Site visit by Engtec and the review of historical aerial maps for the adjacent properties the findings describing the PCAs related to the property use are listed below. The surrounding property use was mostly community and agricultural land use.

Table 3 – Off-Site Potentially Contaminating Activities

Directions	Address	PCA no. per Table 2 O.Reg. 153	Land Use	Area of Potential Environmental Concern (Yes/No)
West	3449 Baseline Rd RR#3, Sutton, ON L0E 1R0	PCA#27 (Garages and Maintenance and Repair of Railcars, Marine Vehicles and Aviation Vehicles) Existing boat repair Shop in West direction (upgradient) of the property	Industrial	Yes, APEC#4. The surrounding property is upgradient direction to the groundwater flow.

6 REVIEW AND EVALUATION OF INFORMATION

6.1 Potentially Contaminating Activities (PCAs)

Based on the information reviewed for the APU for Site from aerial photographs, database search, and Site visit all the PCAs identified for the Site are listed below in Table 3.

Table 4: Potentially Contaminating Activities and Areas of Potential Environmental Concern

PCA#	Location of PCA	PCA no. per Table 2 O.Reg. 153 (Justification)	Area of Potential Environmental Concern (Yes/No) (APEC#)
PCA#1	On-Site	PCA#30 (Importation of Fill material of Unknown Quality during the construction of roadway) - Development of the Site and installing underground utilities at Site.	Yes, APEC#1 – developmental activities were noted from aerials before 2000s indicating likely presence of fill material of unknown quality.
PCA#2	On-Site	N/S (Application of de-icing agents) - Use of antifreeze chemicals or salt for winter maintenance.	Yes, APEC#2
PCA#3	On-Site and Surrounding Property	PCA#55 (Transformer manufacturing, processing, and use) - Presence of transformer noted on the Site	No, Outside excavation area and excavation is shallow.
PCA#4	On-Site	PCA#28 (Gasoline and Associated Products Storage in Fixed Tanks) - Self serve fuel outlet present on the Site	No, Outside excavation area and excavation is shallow.
PCA#5	On-Site	PCA#52 (Storage, maintenance, fuelling and repair of equipment, vehicles, and material used to maintain transportation systems) - Aboveground storage tanks	Yes, APEC#4

PCA#	Location of PCA	PCA no. per Table 2 O.Reg. 153 (Justification)	Area of Potential Environmental Concern (Yes/No) (APEC#)
PCA#6	On-Site	PCA#48 (Salt Manufacturing, Processing and Bulk Storage) - Salt stockpile of unknown quantity stored on Site	No, Outside excavation area and excavation is shallow.
PCA#7	On-Site	PCA#27 (Garages and Maintenance and Repair of Railcars, Marine Vehicles and Aviation Vehicles) - Existing garage within existing building	Yes, APEC#4
PCA#8	Off-Site	PCA#27 (Garages and Maintenance and Repair of Railcars, Marine Vehicles and Aviation Vehicles) Existing boat repair Shop in West direction (upgradient) of the property	No, not onsite and too far from excavation area.

N/S – not specified in Table 2, Schedule D, O. Reg. 153/04

6.2 Areas of Potential Environment Concern (APECs)

Based on the reviewed historical data from aerial photographs, ERIS database search, PCAs, and Site visit the APECs identified for the Site are as identified in Table 5.

Table 4: Areas of Potential Environmental Concern and Contaminants of Potential Concern

APEC#	PCA#	PCA no. per Table 2 O.Reg. 153	Location	Contaminants of Potential Concern (CoPC)
APEC#1	PCA#1	PCA#30 (Importation of Fill material of Unknown Quality during the construction of building on Site) - Development of building and installing underground utilities at Site	On Site	Metals and inorganics, Polycyclic Aromatic Hydrocarbons and Petroleum Hydrocarbons (PHCs) and Benzene, Toluene, Ethylbenzene and Xylenes (BTEX)
APEC#2	PCA#2	N/S (Application of de-icing agents) - Use of antifreeze chemicals or salt for winter maintenance	On Site	Electrical Conductivity (EC), and Sodium Adsorption Ratio (SAR)
APEC#3	PCA#5	PCA#28 (Gasoline and Associated Products Storage in Fixed Tanks)	On Site	PHCs/BTEX
APEC#4	PCA#7	PCA#52 (Storage, maintenance, fuelling and repair of equipment, vehicles, and material used to maintain transportation systems)	On Site	PHCs/BTEX

6.3 Contaminants of Potential Concern (CoPCs)

The Contaminants of Potential Concern (CoPCs) associated with the PCAs which for APECs are identified as below:

Table 5 - Contaminants of Potential Concern

PCA no. per Table 2 O.Reg. 153	Location	Contaminants of Potential Concern (CoPC)
PCA#30 (Importation of Fill material of Unknown Quality during the construction of building on Site) - Development of building and installing underground utilities at Site	On Site	Metals and inorganics, and Petroleum Hydrocarbons (PHCs).
N/S (Application of de-icing agents) - Use of antifreeze chemicals or salt for winter maintenance	On Site	Electrical Conductivity (EC), and Sodium Adsorption Ratio (SAR)
PCA#28 (Gasoline and Associated Products Storage in Fixed Tanks)	On Site	Petroleum Hydrocarbons (PHCs), Benzene, Toluene, Ethylbenzene, and Xylenes (BTEX).
PCA#52 (Storage, maintenance, fuelling and repair of equipment, vehicles, and material used to maintain transportation systems)	On Site	Petroleum Hydrocarbons (PHCs), Benzene, Toluene, Ethylbenzene, and Xylenes (BTEX).

N/S – not specified in Table 2, Schedule D, O.Reg. 153/04

6.4 APU Conceptual Site Model (CSM)

APU CSM	Information Pertaining to Project Area
Figures of the APU Study Area are provided that:	
a) Show any existing buildings and structures	The Site is a municipally owned road operations center with salt storage, vehicle storage and a garage on Site.
b) Identify and locate water bodies located in whole or in part on the APU Study Area	No water body identified to be present within the Site or APU Study Area
c) Identify and locate any Areas of Natural Significance located in whole or in part on the APU Study Area	Based on the review of available resources from the Ministry of Natural Resources and Forestry (MNRF) website accessed on September 16, 2024, no areas of natural significance were identified fort the Site and the APU Study Area.
d) Locate any drinking water wells at the APU Project Area	As per the records accessed from ERIS report, there are three (3) records of monitoring wells found in the APU study area.
e) Show roads, including names, within the APU Study Area	The Project Area consists of Baseline Road, Georgina, ON.

APU CSM	Information Pertaining to Project Area
f) Show use of properties adjacent to the APU Study Area	The land use of Site is a industrial use with the surrounding property being used as commercial, community, and agricultural use.
g) Identify and locate areas where any potentially contaminating activity has occurred, and show tanks in such areas	Five (5) active fuel records and two (2) expired records of the propane tanks are identified for the Site. The Site consists of private fuel outlet (self serve). Based on the database information given by TSSA, the fuel records will contribute to PCA#28 (Gasoline and Associated Products Storage in Fixed Tanks) (specified in Table 2, Schedule D, O.Reg. 153/04), which will result in Contaminants of potential concerns (CoPC) like Petroleum Hydrocarbons (PHCs), Benzene, Toluene, Ethylbenzene, and Xylenes (BTEX). (See table 4)
h) Identify and locate any areas of potential environmental concern	The APECs for the Site and APU Study Area is as identified in Table 4, and shown on Drawing 1
Description and Assessment of:	
a) Areas where potentially contaminating activity on or potentially affecting the APU Project Area has occurred	The details of potentially contaminating activity at Site or in APU Study Area is as described in Table 4 for the Site and surrounding properties.
b) Any contaminants of potential environmental concern (CoPCs)	The CoPCs identified at the Sites are as described in Section 6.3.
c) The potential for underground utilities, if any present, to affect the contaminant distribution and transport.	Based on the surrounding property use it is anticipated that underground utilities are likely to be present within the Site thus increasing the potential of contaminant movement from off-site to onsite.

7 CONCLUSIONS

APEC#	PCA#	PCA no. per Table 2 O.Reg. 153	Location	Contaminants of Potential Concern (CoPC)
APEC#1	PCA#1	PCA#30 (Importation of Fill material of Unknown Quality during the construction of building on Site) - Development of building and installing underground utilities at Site	On Site	Metals and inorganics, Polycyclic Aromatic Hydrocarbons and Petroleum Hydrocarbons (PHCs) and Benzene, Toluene, Ethylbenzene and Xylenes (BTEX)
APEC#2	PCA#2	N/S (Application of de-icing agents) - Use of antifreeze chemicals or salt for winter maintenance	On Site	Electrical Conductivity (EC), and Sodium Adsorption Ratio (SAR)
APEC#3	PCA#5	PCA#28 (Gasoline and Associated Products Storage in Fixed Tanks)	On Site	PHCs/BTEX

APEC#	PCA#	PCA no. per Table 2 O.Reg. 153	Location	Contaminants of Potential Concern (CoPC)
APEC#4	PCA#7	PCA#52 (Storage, maintenance, fuelling and repair of equipment, vehicles, and material used to maintain transportation systems)	On Site	PHCs/BTEX

N/S – not specified in Table 2, Schedule D, O.Reg. 153/04

Based on the reviewed data from the ERIS database, Aerial photographs, MECP database and Site reconnaissance, four (4) APECs arising from seven (7) PCAs were identified to be present on the Site and one (1) PCAs on the surrounding property was not identified as an APEC for the related APU Study area due to significant distance from the excavation area.

Based on the findings of this Assessment of Past Uses, Engtec's QP do not recommends further sampling to be conducted at the Site to characterize the subsurface soils and identify any potential or actual impacts from the identified CoPCs resulted due to APECs and PCAs. Therefore, a sampling and analysis plan and a soil characterisation report are required to be prepared to meet the requirements of O. Reg. 406/19.

8 QUALIFICATIONS OF ASSESSORS

The report was prepared by Sandeep Kaur, M.E.S., graduated from University of Guelph, and a Diploma Application of Environmental Engineering from Conestoga College. Ms. Sandeep has experience soil sampling & analysis, groundwater, and surface water sampling, and she has under two (2) year of experience in supervising drilling activities and conducting Phase I ESAs.

The site visit was conducted by Mr. Furqan Ghouri, M.Eng in Energy and Environment, a graduate of the University of Calgary. Mr. Ghouri possesses expertise in soil sampling and analysis, groundwater and surface water sampling, and drilling activities. He also has experience in excess soil management and conducting Phase I and Phase II Environmental Site Assessments (ESAs).

This APU report was reviewed and prepared under the supervision of Hammad Din, P. Eng. QP ESA. Mr. Din is a professional engineer in Ontario with 18 years of experience in managing a variety of Phase I and Phase II environmental site assessments (ESAs), peer reviews, long term groundwater monitoring programs, ex-situ and in-situ remediation projects, risk assessments and vapour intrusion assessments. In addition, he has supported clients in litigations and provided due diligence advice to real estate investors. Mr. Din has also managed Phase I ESAs in Alberta, British Columbia, Newfoundland, and Quebec.

9 QUALIFIED PERSON DECLARATION

The Project Leader of the Project Area (The Regional Municipality of York) have provided the Qualified Person or an individual supervised by the Qualified Person with all necessary information and access to the Project Area and authorized the Qualified Person or an individual supervised by the Qualified Person to make any

inquiries of the Project Leader and Operator's employees and agents, for the purpose of assisting the Qualified Person in preparing or overseeing the preparation of this document.

The documents were prepared as per O. Reg. 406/19 and the Qualified Person has prepared or overseen the preparation of the assessment of past uses (APU) report. To the best of the QP's knowledge this report is complete and accurate and meet the requirements of the O. Reg. 406/19 and the associated "Soil Rules".

10 REFERENCES

- "Bedrock Geology of Ontario, Southern Sheet," Ontario Geological Survey, MDR126-REV1. Scale 1:250,000. Issued 2011.
- "Quaternary Geology, Seamless coverage of the Province of Ontario"; Data Set 14 - Revised, Scale 1: 1,000,000 Issued 2000.
- Hazardous Waste Information Systems (HWIS, 1986-2005).
- Inventory of Coal Gasification Plant Waste Sites in Ontario. Ontario Ministry of the Environment, April 1987.
- Inventory of Industrial Sites Producing or Using Coal Tar and Related Tars in Ontario. Ontario Ministry of the Environment, November 1988.
- MECP Well Records Search: https://www.ontario.ca/environment-and-energy/map-well-records.
- Occupational Health and Safety Act - Ministry of Labour (MOL).
- Ontario Inventory of PCB Storage Sites. Ontario Ministry of the Environment, 1993- 2003-2004.
- Ontario Ministry of Natural Resources, Natural Heritage website (www.mnr.gov.on.ca/MNR/nhic/areas.cfm)
- Ontario Regulation 153/04. Records of Site Condition. Environmental Protection Act. 2021.
- Ontario Regulation 406/19. On-Site and Excess Soil Management
- Topographic Map available at the Natural Resources Canada (NRC) website http://atlas.gc.ca/toporama/en/index.html
- Waste Disposal Site Inventory. Waste Management Branch Ontario Ministry of the Environment, June 1991.
- Geotechnical Investigation for Maintenance Building Expansion at Road Operations Centre at 3525 Baseline Road, Georgina, Ontario, for The Regional Municipality of York. Engtec Consulting Inc. 2023.

11 LIMITATIONS AND USE OF REPORT

BASIS OF REPORT

This report ("Report") is based on-Site conditions known or inferred by the investigation undertaken as of the date of the Report. Should changes occur which potentially impact the condition of the site the recommendations of ENGTEC may require re-evaluation. Where special concerns exist, or the Client has special considerations or requirements, these should be disclosed to ENGTEC to allow for additional or special investigations to be undertaken not otherwise within the scope of investigation conducted for the purpose of the Report.

Where applicable, recommended field services are the minimum necessary to ascertain that construction is being carried out in general conformity with building code guidelines, generally accepted practices and ENGTEC's recommendations. Any reduction in the level of services recommended will result in ENGTEC providing qualified opinions regarding the adequacy of the work. ENGTEC can assist design professionals or contractors retained by the Client to review applicable plans, drawings, and specifications as they relate to the Report or to conduct field reviews during construction.

RELIANCE ON INFORMATION PROVIDED

The evaluation and conclusions contained in the Report are based on conditions in evidence at the time of site inspections and information provided to ENGTEC by the Client and others. The Report has been prepared for the specific site, development, building, design or building assessment objectives and purpose as communicated by the Client. ENGTEC has relied in good faith upon such representations, information and instructions and accepts no responsibility for any deficiency, misstatement or inaccuracy contained in the Report as a result of any misstatements, omissions, misrepresentation or fraudulent acts of persons providing information. Unless specifically stated otherwise, the applicability and reliability of the findings, recommendations, suggestions, or opinions expressed in the Report are only valid to the extent that there has been no material alteration to or variation from any of the information provided to ENGTEC. If new information about the environmental conditions at the Site is found, the information should be provided to ENGTEC so that it can be reviewed and revisions to the conclusions and/or recommendations can be made, if warranted.

STANDARD OF CARE

The Report has been prepared in a manner consistent with the degree of care and skill exercised by engineering consultants currently practicing under similar circumstances and locale. No other warranty, expressed or implied, is made.

COMPLETE REPORT

All documents, records, data, and files, whether electronic or otherwise, generated as part of this assignment form part of the Report. This material includes, but is not limited to, the terms of reference given to ENGTEC by the Client, communications between ENGTEC and the Client, other reports, proposals, or documents prepared by ENGTEC for the Client in connection with the site described in the Report. In order to properly

understand the suggestions, recommendations and opinions expressed in the Report, reference must be made to the Report in its entirety. ENGTEC is not responsible for use by any party of portions of the Report.

USE OF REPORT

The information and opinions expressed in the Report, or any document forming part of the Report, are for the sole benefit of the Client or the consultant(s) and contractor(s) associated with the current project. No other party may use or rely upon the Report in whole or in part without the written consent of ENGTEC. Any use of the Report, or any portion of the Report, by a third party are the sole responsibility of such third party. Engtec is not responsible for damages suffered by any third party resulting from unauthorized use of the Report.

REPORT FORMAT

Where ENGTEC has submitted both electronic file and a hard copy of the Report, or any document forming part of the Report, only the signed and sealed hard copy shall be the original documents for record and working purposes. In the event of a dispute or discrepancy, the hard copy shall govern. Electronic files transmitted by ENGTEC utilize specific software and hardware systems. ENGTEC makes no representation about the compatibility of these files with the Client's current or future software and hardware systems. Regardless of format, the documents described herein are ENGTEC's instruments of professional service and shall not be altered without the written consent of ENGTEC.

We trust that this information is satisfactory for your present requirements. If you have any questions regarding the information in this report, please do not hesitate to contact this office.

Yours Truly,

Manpreet Kaur

Manpreet Kaur, M.E.S.
Environmental Specialist
Engtec Consulting Inc.

Hammad Din, P. Eng.
Manager, Environmental Group
Engtec Consulting Inc.

Figures

Project Area

Project Name: Engineering Services - 3525 Baseline Rd., Georgina - GEC

Project No. ET24-1438B

Project Location: 3525 Baseline Road, Georgina, Ontario

Checked By: H.D.

Drawing Title: Key Plan

Drawn By: S.K.

Drawing No. 1

Date: September 12, 2024

Scale: NTS

Engtec Consulting Inc.
1-2447 Anson Drive
Mississauga, ON, L5S 1G1
Tel: (905) 856-2988

APU Project Area

Proposed excavation area

Project Name: 3525 Baseline Road, Georgina – GEC

Project Location: 3525 Baseline Road, Georgina, Ontario

Drawing Title: Area of Potential Environmental Concern

Drawing No. 2

Project No. ET24–1438B

Checked By: H.D.

Drawn By: S.K.

Date: Nov 30, 2024 Scale: NTS

Engtec Consulting Inc.
1–2447 Anson Drive
Mississauga, ON, L5S 1G1
Tel: (905) 856–2988

APU Study Area
Commercial Land Use
Agricultural Land Use
Industrial Land Use
Site

Project Name: Engineering Services - 3525 Baseline Rd., Georgina - GEC
Project No. ET24-1438B
Project Location: 3525 Baseline Road, Georgina, Ontario
Checked By: H.D.
Drawing Title: Adjacent Land use
Drawn By: S.K.
Drawing No. 3
Date: September 12, 2024
Scale: NTS

Engtec Consulting Inc.
1-2447 Anson Drive
Mississauga, ON, L5S 1G1
Tel: (905) 856-2988

PCA#	Location of PCA	PCA no. per Table 2 O.Reg. 153/04 (Justification)	Area of Potential Environmental Concern (Yes/No) (APEC#)
PCA#1	On-Site	PCA#30 (Importation of Fill material of Unknown Quality during the construction of roadway) - Development of the Site and installing underground utilities at Site.	Yes, APEC#1 – developmental activities were noted from aerials before 2000s indicating likely presence of fill material of unknown quality.
PCA#2	On-Site	N/S (Application of de-icing agents) - Use of antifreeze chemicals or salt for winter maintenance.	Yes, APEC#2
PCA#3	On-Site and Surrounding Property	PCA#55 (Transformer manufacturing, processing, and use) - Presence of transformer noted on the Site	No, outside excavation area and excavation is shallow.
PCA#4	On-Site	PCA#28 (Gasoline and Associated Products Storage in Fixed Tanks) - Self-serve fuel outlet presents on the Site	No, outside excavation area and excavation is shallow.
PCA#5	On-Site	PCA#52 (Storage, maintenance, fuelling and repair of equipment, vehicles, and material used to maintain transportation systems) - Aboveground storage tanks	Yes, APEC#34
PCA#6	On-Site	PCA#48 (Salt Manufacturing, Processing and Bulk Storage) - Salt stockpile of unknown quantity stored on Site	No, outside excavation area and excavation is shallow.
PCA#7	On-Site	PCA#27 (Garages and Maintenance and Repair of Railcars, Marine Vehicles and Aviation Vehicles) - Existing garage within existing building	Yes, APEC#4
PCA#8	Off-Site	PCA#27 (Garages and Maintenance and Repair of Railcars, Marine Vehicles and Aviation Vehicles) Existing boat repair Shop in West direction (upgradient) of the property	No, not onsite and too far from excavation area.

APU Project Area

3 Potentially Contaminating Activities

Project Name: 3525 Baseline Road, Georgina – GEC

Project Location: 3525 Baseline Road, Georgina, Ontario

Drawing Title: Potentially Contaminating Activities

Drawing No. 4

Project No. ET24–1438B

Checked By: H.D.

Drawn By: S.K.

Date:Nov 30, 2024 Scale:NTS

Engtec Consulting Inc.
1–2447 Anson Drive
Mississauga, ON, L5S 1G1
Tel: (905) 856–2988

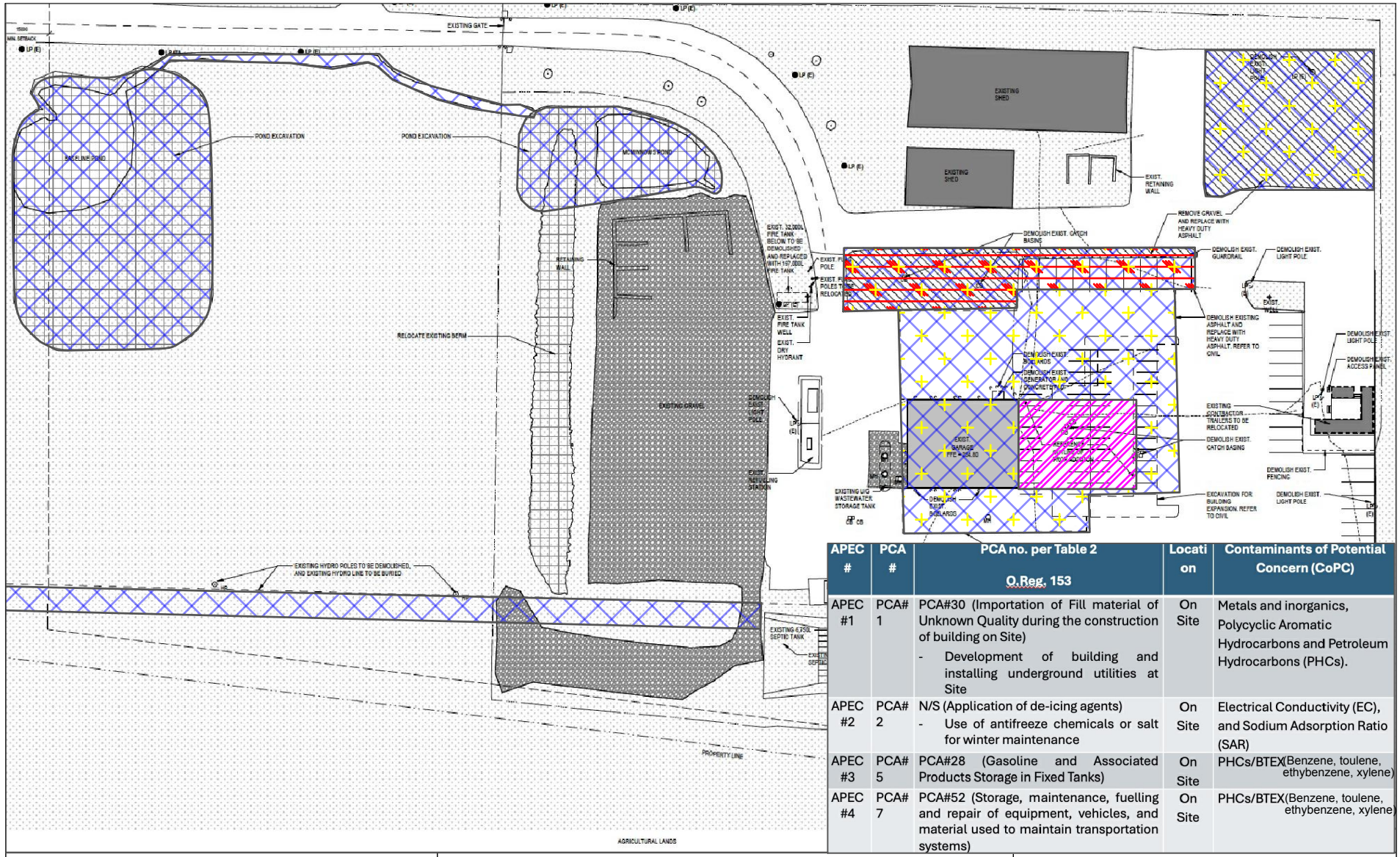

APEC #	PCA #	PCA no. per Table 2 O.Reg. 153	Location	Contaminants of Potential Concern (CoPC)
APEC #1	PCA# 1	PCA#30 (Importation of Fill material of Unknown Quality during the construction of building on Site) - Development of building and installing underground utilities at Site	On Site	Metals and inorganics, Polycyclic Aromatic Hydrocarbons and Petroleum Hydrocarbons (PHCs).
APEC #2	PCA# 2	N/S (Application of de-icing agents) - Use of antifreeze chemicals or salt for winter maintenance	On Site	Electrical Conductivity (EC), and Sodium Adsorption Ratio (SAR)
APEC #3	PCA# 5	PCA#28 (Gasoline and Associated Products Storage in Fixed Tanks)	On Site	PHCs/BTEX(Benzene, toulene, ethybenzene, xylene)
APEC #4	PCA# 7	PCA#52 (Storage, maintenance, fuelling and repair of equipment, vehicles, and material used to maintain transportation systems)	On Site	PHCs/BTEX(Benzene, toulene, ethybenzene, xylene)

APU Project Area

APEC#1

APEC#2

APEC#3

APEC#4

Project No. ET24–1438B

Project Name: 3525 Baseline Road, Georgina – GEC

Project Location: 3525 Baseline Road, Georgina, Ontario

Drawing Title: Area of Potential Environmental Concern

Drawing No. 5

Checked By: H.D.

Drawn By: S.K.

Date:Nov 30, 2024

Scale:NTS

Engtec Consulting Inc.
1–2447 Anson Drive
Mississauga, ON, L5S 1G1
Tel: (905) 856–2988

Existing Garage	Existing pond
Existing Shed	Existing Asphalt
Existing Salt Storage	Ditcing Material

Project Name: 3525 Baseline Road,Georgina-GEC
Project Location: 3525 Baseline Road, Georgina, Ontario
Drawing Title: Existing Features and Structures on Site
Drawing Number: 06
Date: March 5, 2025

Project Number: ET24-1438B
Checked by: Hammad Din
Prepared by: Manpreet Kaur

Engtec Consulting Inc.
2447 Anson Drive,
Mississauga, Ontario,
L5S 1G1
Tel: 905.856.2988

Appendix A - Site Photograph

Photo 1. Sand Storage

Photo 2. Salt Storage

Photo 3. Brine Storage Tank

Photo 4. Diesel and Gas Tank

Photo 5. Underground Holding Tanks

Photo 6. Topsoil stockpile (Ditching material)

Photo 7. Gravel (Ditching material)

Photo 8. Mulch Stockpile

Photo 9. Chemical Storage Area

Photo 10. Eastern side of the Site

Photo 11. Northern side of the Site

Photo 12. Southern side of the Site

Photo 13. Western side of the Site

Appendix B – ERIS Report

DATABASE REPORT

Project Property:	*ET24-1438B - Engineering Services - 3525 Baseline Rd, Georgina, ON* *3525 Baseline Rd, Georgina, ON* *Sutton West ON L0E 1R0*
Project No:	*ET24-1438B*
Report Type:	*Quote - Custom-Build Your Own Report*
Order No:	*24091200258*
Requested by:	*Engtec Consulting Inc.*
Date Completed:	*September 17, 2024*

Environmental Risk Information Services
A division of Glacier Media Inc.
1.866.517.5204 | info@erisinfo.com | erisinfo.com

Table of Contents

Table of Contents....2
Executive Summary....3
Executive Summary: Report Summary....4
Executive Summary: Site Report Summary - Project Property....7
Executive Summary: Site Report Summary - Surrounding Properties....11
Executive Summary: Summary By Data Source....14
Map....21
Aerial....22
Topographic Map....23
Detail Report....24
Unplottable Summary....83
Unplottable Report....84
Appendix: Database Descriptions....87
Definitions....97

Notice: IMPORTANT LIMITATIONS and YOUR LIABILITY

Reliance on information in Report: This report DOES NOT replace a full Phase I Environmental Site Assessment but is solely intended to be used as a database review of environmental records.

License for use of information in Report: No page of this report can be used without this cover page, this notice and the project property identifier. The information in Report(s) may not be modified or re-sold.

Your Liability for misuse: Using this Service and/or its reports in a manner contrary to this Notice or your agreement will be in breach of copyright and contract and ERIS may obtain damages for such mis-use, including damages caused to third parties, and gives ERIS the right to terminate your account, rescind your license to any previous reports and to bar you from future use of the Service.

No warranty of Accuracy or Liability for ERIS: The information contained in this report has been produced by ERIS Information Limited Partnership ("ERIS") using various sources of information, including information provided by Federal and Provincial government departments. The report applies only to the address and up to the date specified on the cover of this report, and any alterations or deviation from this description will require a new report. This report and the data contained herein does not purport to be and does not constitute a guarantee of the accuracy of the information contained herein and does not constitute a legal opinion nor medical advice. Although ERIS has endeavored to present you with information that is accurate, ERIS disclaims, any and all liability for any errors, omissions, or inaccuracies in such information and data, whether attributable to inadvertence, negligence or otherwise, and for any consequences arising therefrom. Liability on the part of ERIS is limited to the monetary value paid for this report.

Trademark and Copyright: You may not use the ERIS trademarks or attribute any work to ERIS other than as outlined above. This Service and Report (s) are protected by copyright owned by ERIS Information Limited Partnership. Copyright in data used in the Service or Report(s) (the "Data") is owned by ERIS or its licensors. The Service, Report(s) and Data may not be copied or reproduced in whole or in any substantial part without prior written consent of ERIS.

Executive Summary

Property Information:

Project Property:	*ET24-1438B - Engineering Services - 3525 Baseline Rd, Georgina, ON* *3525 Baseline Rd, Georgina, ON Sutton West ON L0E 1R0*
Project No:	*ET24-1438B*

Order Information:

Order No:	*24091200258*
Date Requested:	*September 12, 2024*
Requested by:	*Engtec Consulting Inc.*
Report Type:	*Quote - Custom-Build Your Own Report*

Historical/Products:

City Directory Search	*CD - Subject Site*
ERIS Xplorer	*ERIS Xplorer*
Insurance Products	*Fire Insurance Maps/Inspection Reports/Site Plans*

Executive Summary: Report Summary

Database	Name	Searched	Project Property	Boundary to 0.25km	Total
AAGR	Abandoned Aggregate Inventory	Y	0	0	0
AGR	Aggregate Inventory	Y	0	0	0
AMIS	Abandoned Mine Information System	Y	0	0	0
ANDR	Anderson's Waste Disposal Sites	Y	0	0	0
AST	Aboveground Storage Tanks	Y	0	0	0
AUWR	Automobile Wrecking & Supplies	Y	0	0	0
BORE	Borehole	Y	0	0	0
CA	Certificates of Approval	Y	0	0	0
CDRY	Dry Cleaning Facilities	Y	0	0	0
CFOT	Commercial Fuel Oil Tanks	Y	0	0	0
CHEM	Chemical Manufacturers and Distributors	Y	0	0	0
CHM	Chemical Register	Y	0	0	0
CNG	Compressed Natural Gas Stations	Y	0	0	0
COAL	Inventory of Coal Gasification Plants and Coal Tar Sites	Y	0	0	0
CONV	Compliance and Convictions	Y	0	0	0
CPU	Certificates of Property Use	Y	0	0	0
DRL	Drill Hole Database	Y	0	0	0
DTNK	Delisted Fuel Tanks	Y	2	2	4
EASR	Environmental Activity and Sector Registry	Y	0	0	0
EBR	Environmental Registry	Y	0	0	0
ECA	Environmental Compliance Approval	Y	0	0	0
EEM	Environmental Effects Monitoring	Y	0	0	0
EHS	ERIS Historical Searches	Y	0	0	0
EIIS	Environmental Issues Inventory System	Y	0	0	0
EMHE	Emergency Management Historical Event	Y	0	0	0
EPAR	Environmental Penalty Annual Report	Y	0	0	0
EXP	List of Expired Fuels Safety Facilities	Y	0	1	1
FCON	Federal Convictions	Y	0	0	0
FCS	Contaminated Sites on Federal Land	Y	0	0	0
FOFT	Fisheries & Oceans Fuel Tanks	Y	0	0	0
FRST	Federal Identification Registry for Storage Tank Systems (FIRSTS)	Y	0	0	0
FST	Fuel Storage Tank	Y	3	0	3
FSTH	Fuel Storage Tank - Historic	Y	4	0	4
GEN	Ontario Regulation 347 Waste Generators Summary	Y	14	11	25
GHG	Greenhouse Gas Emissions from Large Facilities	Y	0	0	0
HINC	TSSA Historic Incidents	Y	0	0	0

Database	Name	Searched	Project Property	Boundary to 0.25km	Total
IAFT	Indian & Northern Affairs Fuel Tanks	Y	0	0	0
INC	Fuel Oil Spills and Leaks	Y	0	0	0
LIMO	Landfill Inventory Management Ontario	Y	0	0	0
MINE	Canadian Mine Locations	Y	0	0	0
MNR	Mineral Occurrences	Y	0	0	0
NATE	National Analysis of Trends in Emergencies System (NATES)	Y	0	0	0
NCPL	Non-Compliance Reports	Y	0	0	0
NDFT	National Defense & Canadian Forces Fuel Tanks	Y	0	0	0
NDSP	National Defense & Canadian Forces Spills	Y	0	0	0
NDWD	National Defence & Canadian Forces Waste Disposal Sites	Y	0	0	0
NEBI	National Energy Board Pipeline Incidents	Y	0	0	0
NEBP	National Energy Board Wells	Y	0	0	0
NEES	National Environmental Emergencies System (NEES)	Y	0	0	0
NPCB	National PCB Inventory	Y	0	0	0
NPR2	National Pollutant Release Inventory 1993-2020	Y	0	0	0
NPRI	National Pollutant Release Inventory - Historic	Y	0	0	0
OGWE	Oil and Gas Wells	Y	0	0	0
OOGW	Ontario Oil and Gas Wells	Y	0	0	0
OPCB	Inventory of PCB Storage Sites	Y	0	0	0
ORD	Orders	Y	0	0	0
PAP	Canadian Pulp and Paper	Y	0	0	0
PCFT	Parks Canada Fuel Storage Tanks	Y	0	0	0
PES	Pesticide Register	Y	0	0	0
PFAS	Ontario PFAS Spills	N	-	-	-
PFCH	NPRI Reporters - PFAS Substances	Y	0	0	0
PFHA	Potential PFAS Handlers from NPRI	Y	0	0	0
PINC	Pipeline Incidents	Y	1	1	2
PPHA	Potential PFAS Handlers from EASR	Y	0	0	0
PRT	Private and Retail Fuel Storage Tanks	Y	0	1	1
PTTW	Permit to Take Water	Y	0	0	0
REC	Ontario Regulation 347 Waste Receivers Summary	Y	0	0	0
RSC	Record of Site Condition	Y	0	0	0
RST	Retail Fuel Storage Tanks	Y	0	1	1
SCT	Scott's Manufacturing Directory	Y	0	0	0
SPL	Ontario Spills	Y	5	3	8
SRDS	Wastewater Discharger Registration Database	Y	0	0	0
TANK	Anderson's Storage Tanks	Y	0	0	0
TCFT	Transport Canada Fuel Storage Tanks	Y	0	0	0
VAR	Variances for Abandonment of Underground Storage Tanks	Y	0	0	0
WDS	Waste Disposal Sites - MOE CA Inventory	Y	0	0	0

Database	Name	Searched	Project Property	Boundary to 0.25km	Total
WDSH	***Waste Disposal Sites - MOE 1991 Historical Approval Inventory***	*Y*	*0*	*0*	*0*
WWIS	***Water Well Information System***	*Y*	*3*	*7*	*10*
		Total:	*32*	*27*	*59*

Executive Summary: Site Report Summary - Project Property

Map Key	DB	Company/Site Name	Address	Dir/Dist (m)	Elev diff (m)	Page Number
1	WWIS		3525 Baseline Road lot 23 con 5 Sutton ON ***Well ID:*** 7394934	E/0.0	0.00	24
2	GEN	The Regional Municipality of York	North District Maintenance Depot 3525 Baseline Road Georgina ON	S/0.0	0.00	27
2	GEN	The Regional Municipality of York	3525 Baseline Rd. Keswick ON L4P 3E9	S/0.0	0.00	27
2	FSTH	YORK REGION ATTN GARY COSGROVE	3525 BASELINE RD GEORGINA ON	S/0.0	0.00	27
2	FSTH	REGIONAL MUNICIPALITY OF YORK ENGINEERING DEPT	3525 BASELINE RD SUTTON WEST ON L0E 1R0	S/0.0	0.00	28
2	FSTH	YORK REGION ATTN GARY COSGROVE	3525 BASELINE RD GEORGINA ON	S/0.0	0.00	28
2	FSTH	REGIONAL MUNICIPALITY OF YORK ENGINEERING DEPT	3525 BASELINE RD SUTTON WEST ON L0E 1R0	S/0.0	0.00	28
2	DTNK	THE REGIONAL MUNICIPALITY OF YORK ATTN WORKS DEPT - GARY COSGROVE	3525 BASELINE RD SUTTON WEST ON	S/0.0	0.00	29

Map Key	DB	Company/Site Name	Address	Dir/Dist (m)	Elev diff (m)	Page Number
2	DTNK	THE REGIONAL MUNICIPALITY OF YORK ATTN WORKS DEPT - GARY COSGROVE	3525 BASELINE RD SUTTON WEST ON	S/0.0	0.00	29
2	GEN	The Regional Municipality of York	North District Maintenance Depot 3525 Baseline Road Georgina ON	S/0.0	0.00	30
2	GEN	The Regional Municipality of York	North District Maintenance Depot 3525 Baseline Road Georgina ON	S/0.0	0.00	31
2	GEN	The Regional Municipality of York	North District Maintenance Depot 3525 Baseline Road Georgina ON	S/0.0	0.00	31
2	SPL		3525 Baseline Rd Georgina ON	S/0.0	0.00	32
2	FST	REGIONAL MUNICIPALITY OF YORK ENGINEERING DEPT	3525 BASELINE RD SUTTON WEST ON	S/0.0	0.00	33
2	FST	YORK REGION ATTN GARY COSGROVE	3525 BASELINE RD GEORGINA ON	S/0.0	0.00	33
2	FST	YORK REGION ATTN GARY COSGROVE	3525 BASELINE RD GEORGINA ON	S/0.0	0.00	33
2	GEN	The Regional Municipality of York	North District Maintenance Depot 3525 Baseline Road Georgina ON	S/0.0	0.00	33

Map Key	DB	Company/Site Name	Address	Dir/Dist (m)	Elev diff (m)	Page Number
2	GEN	The Regional Municipality of York	North District Maintenance Depot 3525 Baseline Road Georgina ON	S/0.0	0.00	34
2	GEN	The Regional Municipality of York	North District Maintenance Depot 3525 Baseline Road Georgina ON L0E 1R0	S/0.0	0.00	34
2	GEN	The Regional Municipality of York	North District Maintenance Depot 3525 Baseline Road Georgina ON L0E 1R0	S/0.0	0.00	35
2	GEN	The Regional Municipality of York	North District Maintenance Depot 3525 Baseline Road Georgina ON L0E 1R0	S/0.0	0.00	36
2	GEN	The Regional Municipality of York Transportation and Transit	North District Maintenance Depot 3525 Baseline Road Georgina ON L0E 1R0	S/0.0	0.00	36
2	SPL	Enbridge Gas Distribution Inc.	3525 Baseline Road Georgina ON	S/0.0	0.00	37
2	SPL	Enbridge Gas Distribution Inc.	3525 Baseline Road, Sutton Georgina ON	S/0.0	0.00	38
2	GEN	The Regional Municipality of York Transportation and Transit	North District Maintenance Depot 3525 Baseline Road Georgina ON L0E 1R0	S/0.0	0.00	39
2	PINC	PIPELINE HIT 1.25"	3525 BASELINE RD,,GEORGINA,ON,L0E 1R0,CA ON	S/0.0	0.00	39
2	GEN	The Regional Municipality of York Transportation and Transit	North District Maintenance Depot 3525 Baseline Road Georgina ON L0E 1R0	S/0.0	0.00	40

Map Key	DB	Company/Site Name	Address	Dir/Dist (m)	Elev diff (m)	Page Number
2	SPL		3525 Baseline Road Georgina ON	S/0.0	0.00	40
2	GEN	The Regional Municipality of York Transportation and Transit	North District Maintenance Depot 3525 Baseline Road Georgina ON L0E 1R0	S/0.0	0.00	41
2	SPL		3525 Baseline Road, Georgina GEORGINA ON	S/0.0	0.00	42
3	WWIS		3525 Baseline Road lot 23 con 5 Sutton ON ***Well ID:*** 7394936	ENE/0.0	0.00	43
4	WWIS		3525 Baseline Road lot 23 con 5 Sutton ON ***Well ID:*** 7394935	N/0.0	-2.08	46

Executive Summary: Site Report Summary - Surrounding Properties

Map Key	DB	Company/Site Name	Address	Dir/Dist (m)	Elev Diff (m)	Page Number
5	WWIS		lot 23 con 5 ON ***Well ID:*** 6921554	NW/9.2	-2.03	48
6	WWIS		lot 9 con 9 ON ***Well ID:*** 6921834	NW/33.8	-2.36	53
7	WWIS		lot 8 con 9 ON ***Well ID:*** 6922157	NW/35.6	-2.95	56
8	WWIS		lot 8 con 9 ON ***Well ID:*** 6922155	NW/53.2	-2.95	58
9	WWIS		lot 22 con 5 ON ***Well ID:*** 6924628	NE/53.3	-1.00	62
10	PRT	YORK REGIONAL POLICE FORCE ATTN: DETECTIVE SARGEN	CON 5 CORNER OF BASELINE SUTTON ON	NE/57.4	-0.92	66
10	DTNK	YORK REGIONAL POLICE FORCE ATTN: DETECTIVE SARGENT NOBLE	CON 5 CORNER OF BASELINE SUTTON ON	NE/57.4	-0.92	66
10	DTNK	YORK REGIONAL POLICE FORCE ATTN: DETECTIVE SARGENT NOBLE	CON 5 CORNER OF BASELINE SUTTON ON	NE/57.4	-0.92	67
10	GEN	York Regional Police	3527 Baseline Road Sutton ON L0E 1R0	NE/57.4	-0.92	67
10	SPL		3527 Baseline Rd. Keswick, ON GEORGINA ON	NE/57.4	-0.92	68
10	EXP	YORK REGIONAL POLICE FORCE ATTN: DETECTIVE SARGENT NOBLE	CON 5 CORNER OF BASELINE SUTTON ON	NE/57.4	-0.92	69

Map Key	DB	Company/Site Name	Address	Dir/Dist (m)	Elev Diff (m)	Page Number
11	GEN	York Regional Police	3527 Base Line Road Georgina ON	NE/57.4	-0.92	69
11	GEN	York Regional Police	3527 Base Line Road Georgina ON	NE/57.4	-0.92	69
11	GEN	York Regional Police	3527 Base Line Road Georgina ON	NE/57.4	-0.92	70
11	GEN	York Regional Police	3527 Baseline Road Sutton ON	NE/57.4	-0.92	70
11	PINC	SOUTH SIMCOE CONTRACTING AND EXCAVATING	3527 BASELINE RD,,SUTTON WEST,ON, L0E 1R0,CA ON	NE/57.4	-0.92	70
11	SPL	Enbridge Gas Distribution Inc.	3527 Baseline Road Georgina ON	NE/57.4	-0.92	71
11	GEN	York Regional Police	3527 Baseline Road Sutton ON L0E 1R0	NE/57.4	-0.92	72
11	GEN	York Regional Police	3527 Baseline Road Sutton ON L0E 1R0	NE/57.4	-0.92	72
11	GEN	York Regional Police	3527 Baseline Road Sutton ON L0E 1R0	NE/57.4	-0.92	73
11	GEN	York Regional Police	3527 Baseline Road Sutton ON L0E 1R0	NE/57.4	-0.92	73
11	SPL	York Regional Police	3527 Baseline Road, Sutton Georgina ON	NE/57.4	-0.92	73
11	GEN	York Regional Police	3527 Baseline Road Sutton ON L0E 1R0	NE/57.4	-0.92	74
11	GEN	York Regional Police	3527 Baseline Road Sutton ON L0E 1R0	NE/57.4	-0.92	74

Map Key	DB	Company/Site Name	Address	Dir/Dist (m)	Elev Diff (m)	Page Number
12	RST	DC MARINE SERVICES	3449 BASELINE KESWICK ON L4P3E9	WSW/65.9	0.00	75
13	WWIS		lot 9 con 9 ON ***Well ID:*** 6913322	NNW/72.2	-3.97	75
14	WWIS		lot 8 con 9 ON ***Well ID:*** 6904898	WNW/201.9	-6.05	79

Executive Summary: Summary By Data Source

DTNK - Delisted Fuel Tanks

A search of the DTNK database, dated Oct 2023 has found that there are 4 DTNK site(s) within approximately 0.25 kilometers of the project property.

Site	Address	Distance (m)	Map Key
THE REGIONAL MUNICIPALITY OF YORK ATTN WORKS DEPT - GARY COSGROVE	3525 BASELINE RD SUTTON WEST ON	0.0	2
THE REGIONAL MUNICIPALITY OF YORK ATTN WORKS DEPT - GARY COSGROVE	3525 BASELINE RD SUTTON WEST ON	0.0	2
YORK REGIONAL POLICE FORCE ATTN: DETECTIVE SARGENT NOBLE	CON 5 CORNER OF BASELINE SUTTON ON	57.4	10
YORK REGIONAL POLICE FORCE ATTN: DETECTIVE SARGENT NOBLE	CON 5 CORNER OF BASELINE SUTTON ON	57.4	10

EXP - List of Expired Fuels Safety Facilities

A search of the EXP database, dated Oct 2023 has found that there are 1 EXP site(s) within approximately 0.25 kilometers of the project property.

Site	Address	Distance (m)	Map Key
YORK REGIONAL POLICE FORCE ATTN: DETECTIVE SARGENT NOBLE	CON 5 CORNER OF BASELINE SUTTON ON	57.4	10

FST - Fuel Storage Tank

A search of the FST database, dated Oct 2023 has found that there are 3 FST site(s) within approximately 0.25 kilometers of the project property.

Site	Address	Distance (m)	Map Key
YORK REGION ATTN GARY COSGROVE	3525 BASELINE RD GEORGINA ON	0.0	2
REGIONAL MUNICIPALITY OF YORK ENGINEERING DEPT	3525 BASELINE RD SUTTON WEST ON	0.0	2
YORK REGION ATTN GARY COSGROVE	3525 BASELINE RD GEORGINA ON	0.0	2

FSTH - Fuel Storage Tank - Historic

A search of the FSTH database, dated Pre-Jan 2010* has found that there are 4 FSTH site(s) within approximately 0.25 kilometers of the project property.

Site	Address	Distance (m)	Map Key
REGIONAL MUNICIPALITY OF YORK ENGINEERING DEPT	3525 BASELINE RD SUTTON WEST ON L0E 1R0	0.0	2
YORK REGION ATTN GARY COSGROVE	3525 BASELINE RD GEORGINA ON	0.0	2
REGIONAL MUNICIPALITY OF YORK ENGINEERING DEPT	3525 BASELINE RD SUTTON WEST ON L0E 1R0	0.0	2
YORK REGION ATTN GARY COSGROVE	3525 BASELINE RD GEORGINA ON	0.0	2

GEN - Ontario Regulation 347 Waste Generators Summary

A search of the GEN database, dated 1986-Oct 31, 2022 has found that there are 25 GEN site(s) within approximately 0.25 kilometers of the project property.

Site	Address	Distance (m)	Map Key
The Regional Municipality of York	North District Maintenance Depot 3525 Baseline Road Georgina ON	0.0	2

Site	Address	Distance (m)	Map Key
The Regional Municipality of York	3525 Baseline Rd. Keswick ON L4P 3E9	0.0	2
The Regional Municipality of York Transportation and Transit	North District Maintenance Depot 3525 Baseline Road Georgina ON L0E 1R0	0.0	2
The Regional Municipality of York Transportation and Transit	North District Maintenance Depot 3525 Baseline Road Georgina ON L0E 1R0	0.0	2
The Regional Municipality of York Transportation and Transit	North District Maintenance Depot 3525 Baseline Road Georgina ON L0E 1R0	0.0	2
The Regional Municipality of York Transportation and Transit	North District Maintenance Depot 3525 Baseline Road Georgina ON L0E 1R0	0.0	2
The Regional Municipality of York	North District Maintenance Depot 3525 Baseline Road Georgina ON L0E 1R0	0.0	2
The Regional Municipality of York	North District Maintenance Depot 3525 Baseline Road Georgina ON L0E 1R0	0.0	2
The Regional Municipality of York	North District Maintenance Depot 3525 Baseline Road Georgina ON L0E 1R0	0.0	2
The Regional Municipality of York	North District Maintenance Depot 3525 Baseline Road Georgina ON	0.0	2
The Regional Municipality of York	North District Maintenance Depot 3525 Baseline Road Georgina ON	0.0	2
The Regional Municipality of York	North District Maintenance Depot 3525 Baseline Road Georgina ON	0.0	2
The Regional Municipality of York	North District Maintenance Depot 3525 Baseline Road Georgina ON	0.0	2

Site	Address	Distance (m)	Map Key
The Regional Municipality of York	North District Maintenance Depot 3525 Baseline Road Georgina ON	0.0	2
York Regional Police	3527 Baseline Road Sutton ON L0E 1R0	57.4	10
York Regional Police	3527 Baseline Road Sutton ON L0E 1R0	57.4	11
York Regional Police	3527 Baseline Road Sutton ON L0E 1R0	57.4	11
York Regional Police	3527 Baseline Road Sutton ON L0E 1R0	57.4	11
York Regional Police	3527 Baseline Road Sutton ON L0E 1R0	57.4	11
York Regional Police	3527 Baseline Road Sutton ON L0E 1R0	57.4	11
York Regional Police	3527 Baseline Road Sutton ON L0E 1R0	57.4	11
York Regional Police	3527 Base Line Road Georgina ON	57.4	11
York Regional Police	3527 Base Line Road Georgina ON	57.4	11
York Regional Police	3527 Base Line Road Georgina ON	57.4	11

Site	Address	Distance (m)	Map Key
York Regional Police	3527 Baseline Road Sutton ON	57.4	11

PINC - Pipeline Incidents

A search of the PINC database, dated Feb 28, 2021 has found that there are 2 PINC site(s) within approximately 0.25 kilometers of the project property.

Site	Address	Distance (m)	Map Key
PIPELINE HIT 1.25"	3525 BASELINE RD,,GEORGINA,ON,L0E 1R0,CA ON	0.0	2
SOUTH SIMCOE CONTRACTING AND EXCAVATING	3527 BASELINE RD,,SUTTON WEST,ON, L0E 1R0,CA ON	57.4	11

PRT - Private and Retail Fuel Storage Tanks

A search of the PRT database, dated 1989-1996* has found that there are 1 PRT site(s) within approximately 0.25 kilometers of the project property.

Site	Address	Distance (m)	Map Key
YORK REGIONAL POLICE FORCE ATTN: DETECTIVE SARGEN	CON 5 CORNER OF BASELINE SUTTON ON	57.4	10

RST - Retail Fuel Storage Tanks

A search of the RST database, dated 1999-Apr 30, 2024 has found that there are 1 RST site(s) within approximately 0.25 kilometers of the project property.

Site	Address	Distance (m)	Map Key
DC MARINE SERVICES	3449 BASELINE KESWICK ON L4P3E9	65.9	12

SPL - Ontario Spills

A search of the SPL database, dated 1988-Mar 2024; May 2024 has found that there are 8 SPL site(s) within approximately 0.25

kilometers of the project property.

Site	Address	Distance (m)	Map Key
	3525 Baseline Road Georgina ON	0.0	2
Enbridge Gas Distribution Inc.	3525 Baseline Road, Sutton Georgina ON	0.0	2
Enbridge Gas Distribution Inc.	3525 Baseline Road Georgina ON	0.0	2
	3525 Baseline Rd Georgina ON	0.0	2
	3525 Baseline Road, Georgina GEORGINA ON	0.0	2
	3527 Baseline Rd. Keswick, ON GEORGINA ON	57.4	10
York Regional Police	3527 Baseline Road, Sutton Georgina ON	57.4	11
Enbridge Gas Distribution Inc.	3527 Baseline Road Georgina ON	57.4	11

WWIS - Water Well Information System

A search of the WWIS database, dated Dec 31 2023 has found that there are 10 WWIS site(s) within approximately 0.25 kilometers of the project property.

Site	Address	Distance (m)	Map Key
	3525 Baseline Road lot 23 con 5 Sutton ON ***Well ID:*** 7394934	0.0	1
	3525 Baseline Road lot 23 con 5 Sutton ON	0.0	3

Site	Address	Distance (m)	Map Key
	Well ID: 7394936		
	3525 Baseline Road lot 23 con 5 Sutton ON	0.0	4
	Well ID: 7394935		
	lot 23 con 5 ON	9.2	5
	Well ID: 6921554		
	lot 9 con 9 ON	33.8	6
	Well ID: 6921834		
	lot 8 con 9 ON	35.6	7
	Well ID: 6922157		
	lot 8 con 9 ON	53.2	8
	Well ID: 6922155		
	lot 22 con 5 ON	53.3	9
	Well ID: 6924628		
	lot 9 con 9 ON	72.2	13
	Well ID: 6913322		
	lot 8 con 9 ON	201.9	14
	Well ID: 6904898		

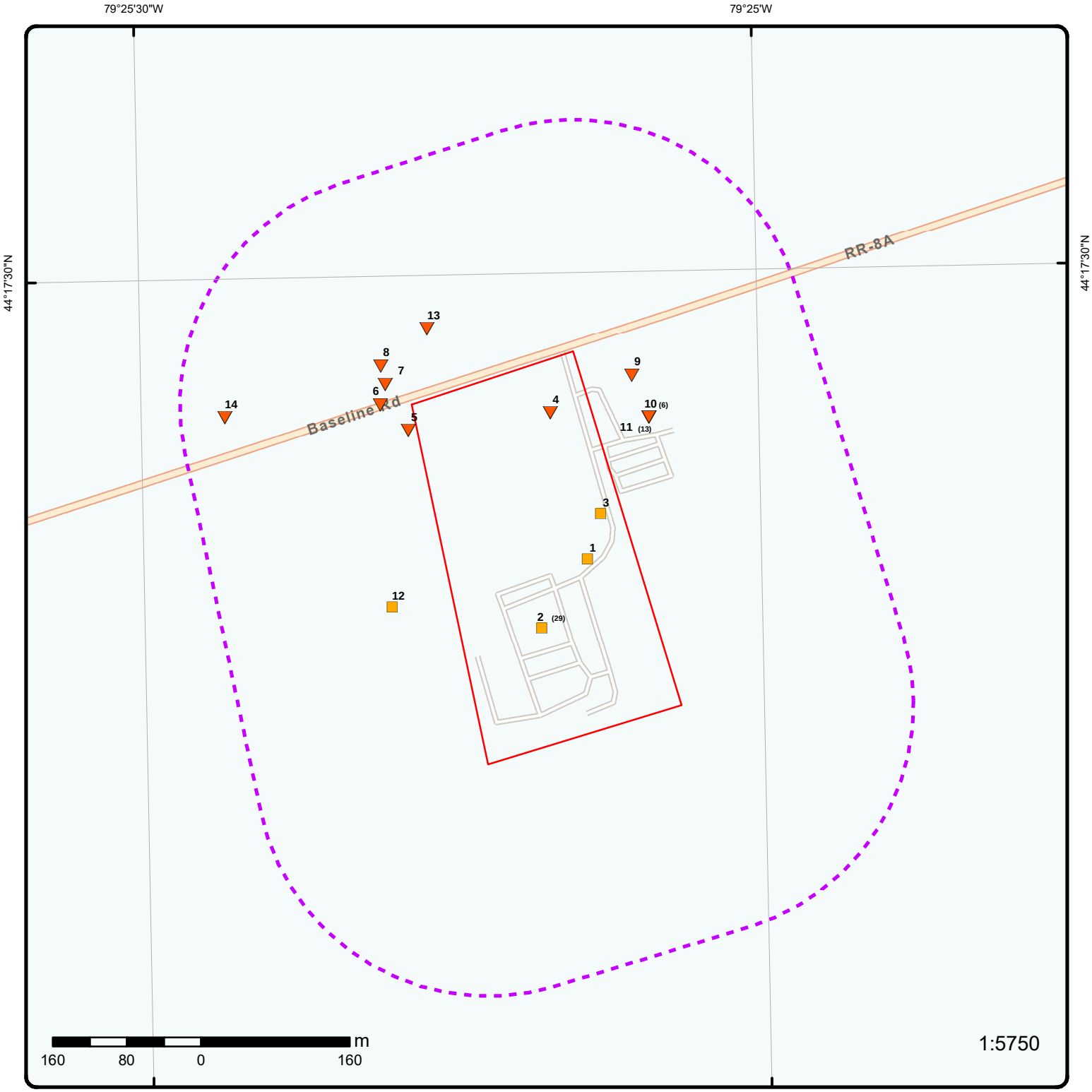

Map: 0.25 Kilometer Radius

Order Number: 24091200258

Address: 3525 Baseline Rd, Georgina, ON, Sutton West, ON

- Project Property
- Buffer Outline
- Eris Sites with Higher Elevation
- Eris Sites with Same Elevation
- Eris Sites with Lower Elevation
- Eris Sites with Unknown Elevation
- Freeways; Highways
- Traffic Circle; Ramp
- Major Arterial; Minor Arterial
- Local Road
- Service Road; Traffic Circle; Ramp
- Rail
- Beach
- Airport
- Industrial Area
- Military Base
- Aircraft Roads
- Native Reservation
- Hospital
- Shopping & Sports Area
- University/College
- Cemetery; Golf Course
- Parkt (National)
- Park (City/County)

Source: © 2021 ESRI StreetMap Premium.

© ERIS Information Limited Partnership

79°25'30"W

Aerial

Year: 2022

Order Number: 24091200258

Address: 3525 Baseline Rd, Georgina, ON, Sutton West, ON

Source: ESRI World Imagery

© ERIS Information Limited Partnership

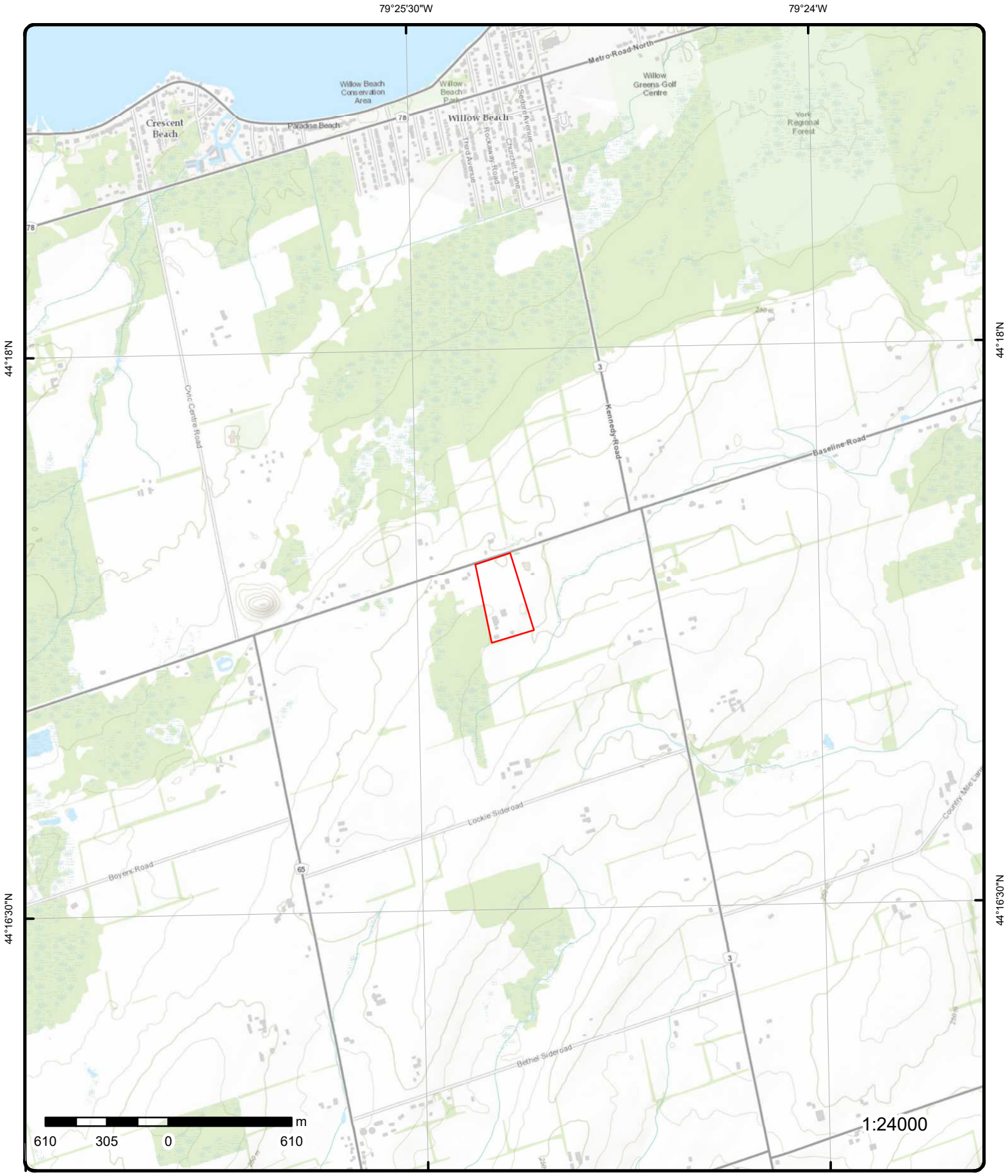

Topographic Map

Order Number: 24091200258

Address: 3525 Baseline Rd, Georgina, ON, ON

Source: ESRI World Topographic Map

© ERIS Information Limited Partnership

Detail Report

Map Key	Number of Records	Direction/ Distance (m)	Elev/Diff (m)	Site	DB
1	1 of 1	E/0.0	254.9 / 0.00	3525 Baseline Road lot 23 con 5 Sutton ON	WWIS

Well ID:	7394934	**Flowing (Y/N):**	
Construction Date:		**Flow Rate:**	
Use 1st:	Monitoring	**Data Entry Status:**	
Use 2nd:		**Data Src:**	
Final Well Status:	Observation Wells	**Date Received:**	08/20/2021
Water Type:		**Selected Flag:**	TRUE
Casing Material:		**Abandonment Rec:**	
Audit No:	VIFHVK86	**Contractor:**	7732
Tag:	A326578	**Form Version:**	9
Constructn Method:		**Owner:**	
Elevation (m):		**County:**	YORK
Elevatn Reliabilty:		**Lot:**	023
Depth to Bedrock:		**Concession:**	05
Well Depth:		**Concession Name:**	CON
Overburden/Bedrock:		**Easting NAD83:**	
Pump Rate:		**Northing NAD83:**	
Static Water Level:		**Zone:**	
Clear/Cloudy:		**UTM Reliability:**	

Municipality: GEORGINA TOWNSHIP (NORTH GWILLIMBURY)
Site Info:

PDF URL (Map): https://d2khazk8e83rdv.cloudfront.net/moe_mapping/downloads/2Water/Wells_pdfs/739\7394934.pdf

Additional Detail(s) (Map)

Well Completed Date:	08/12/2021
Year Completed:	2021
Depth (m):	3.8
Latitude:	44.2888866468513
Longitude:	-79.4190256225061
X:	-79.41902547054165
Y:	44.28888664529131
Path:	739\7394934.pdf

Bore Hole Information

Bore Hole ID:	1008750560	**Elevation:**	
DP2BR:		**Elevrc:**	
Spatial Status:		**Zone:**	17
Code OB:		**East83:**	626137.00
Code OB Desc:		**North83:**	4905175.00
Open Hole:		**Org CS:**	UTM83
Cluster Kind:		**UTMRC:**	4
Date Completed:	08/12/2021	**UTMRC Desc:**	margin of error : 30 m - 100 m
Remarks:		**Location Method:**	wwr

Location Method Desc: on Water Well Record
Elevrc Desc:
Location Source Date:
Improvement Location Source:
Improvement Location Method:
Source Revision Comment:

Supplier Comment:

Overburden and Bedrock Materials Interval

Formation ID:	1008750914
Layer:	1
Color:	6
General Color:	BROWN
Material 1:	05
Material 1 Desc:	CLAY
Material 2:	28
Material 2 Desc:	SAND
Material 3:	
Material 3 Desc:	
Formation Top Depth:	0.0
Formation End Depth:	3.799999952316284
Formation End Depth UOM:	m

Annular Space/Abandonment Sealing Record

Plug ID:	1008751229
Layer:	2
Plug From:	0.30000001192092896
Plug To:	2.0
Plug Depth UOM:	m

Annular Space/Abandonment Sealing Record

Plug ID:	1008751131
Layer:	1
Plug From:	
Plug To:	
Plug Depth UOM:	m

Annular Space/Abandonment Sealing Record

Plug ID:	1008751228
Layer:	1
Plug From:	0.0
Plug To:	0.30000001192092896
Plug Depth UOM:	m

Annular Space/Abandonment Sealing Record

Plug ID:	1008751230
Layer:	3
Plug From:	2.0
Plug To:	3.799999952316284
Plug Depth UOM:	m

Method of Construction & Well Use

Method Construction ID:	1008750764
Method Construction Code:	E
Method Construction:	Auger

Other Method Construction:

Pipe Information

Pipe ID: 1008750681
Casing No: 0
Comment:
Alt Name:

Construction Record - Casing

Casing ID: 1008750998
Layer: 1
Material: 5
Open Hole or Material: PLASTIC
Depth From: 0.0
Depth To: 2.299999952316284
Casing Diameter: 5.0
Casing Diameter UOM: cm
Casing Depth UOM: m

Construction Record - Screen

Screen ID: 1008751048
Layer: 1
Slot: 10
Screen Top Depth: 2.299999952316284
Screen End Depth: 3.799999952316284
Screen Material: 5
Screen Depth UOM: m
Screen Diameter UOM: cm
Screen Diameter: 6.300000190734863

Results of Well Yield Testing

Pumping Test Method Desc:
Pump Test ID: 1008750682
Pump Set At:
Static Level:
Final Level After Pumping:
Recommended Pump Depth:
Pumping Rate:
Flowing Rate:
Recommended Pump Rate:
Levels UOM: m
Rate UOM: LPM
Water State After Test Code:
Water State After Test:
Pumping Test Method:
Pumping Duration HR:
Pumping Duration MIN:
Flowing:

Hole Diameter

Hole ID: 1008751093
Diameter: 11.399999618530273
Depth From: 0.0
Depth To: 3.799999952316284
Hole Depth UOM: m
Hole Diameter UOM: cm

Map Key	Number of Records	Direction/ Distance (m)	Elev/Diff (m)	Site	DB
2	1 of 29	S/0.0	254.9 / 0.00	The Regional Municipality of York North District Maintenance Depot 3525 Baseline Road Georgina ON	GEN

Generator No: ON6695973
SIC Code: 488490
SIC Description: Other Support Activities for Road Transport
Approval Years: 03,04,05,06,07,08
PO Box No:
Country:
Status:
Co Admin:
Choice of Contact:
Phone No Admin:
Contaminated Facility:
MHSW Facility:

Detail(s)

Waste Class: 212
Waste Class Name: ALIPHATIC SOLVENTS

Waste Class: 263
Waste Class Name: ORGANIC LABORATORY CHEMICALS

Waste Class: 213
Waste Class Name: PETROLEUM DISTILLATES

Waste Class: 221
Waste Class Name: LIGHT FUELS

Waste Class: 252
Waste Class Name: WASTE OILS & LUBRICANTS

2	2 of 29	S/0.0	254.9 / 0.00	The Regional Municipality of York 3525 Baseline Rd. Keswick ON L4P 3E9	GEN

Generator No: ON3094855
SIC Code:
SIC Description:
Approval Years: 04
PO Box No:
Country:
Status:
Co Admin:
Choice of Contact:
Phone No Admin:
Contaminated Facility:
MHSW Facility:

2	3 of 29	S/0.0	254.9 / 0.00	YORK REGION ATTN GARY COSGROVE 3525 BASELINE RD GEORGINA ON	FSTH

License Issue Date: 8/23/2002
Tank Status: Licensed
Tank Status As Of: August 2007
Operation Type: Private Fuel Outlet
Facility Type: Gasoline Station - Self Serve

Map Key	Number of Records	Direction/ Distance (m)	Elev/Diff (m)	Site	DB

--Details--

Status:	Active
Year of Installation:	
Corrosion Protection:	
Capacity:	15000
Tank Fuel Type:	Liquid Fuel Single Wall AST - Gasoline
Status:	Active
Year of Installation:	
Corrosion Protection:	
Capacity:	15000
Tank Fuel Type:	Liquid Fuel Single Wall AST - Diesel

2	***4 of 29***	***S/0.0***	***254.9 / 0.00***	***REGIONAL MUNICIPALITY OF YORK ENGINEERING DEPT 3525 BASELINE RD SUTTON WEST ON L0E 1R0***	***FSTH***

License Issue Date:	9/18/1995
Tank Status:	Licensed
Tank Status As Of:	August 2007
Operation Type:	Private Fuel Outlet
Facility Type:	Gasoline Station - Self Serve

--Details--

Status:	Active
Year of Installation:	1990
Corrosion Protection:	
Capacity:	9092
Tank Fuel Type:	Liquid Fuel Single Wall UST - Diesel

2	***5 of 29***	***S/0.0***	***254.9 / 0.00***	***YORK REGION ATTN GARY COSGROVE 3525 BASELINE RD GEORGINA ON***	***FSTH***

License Issue Date:	8/23/2002
Tank Status:	Licensed
Tank Status As Of:	December 2008
Operation Type:	Private Fuel Outlet
Facility Type:	Gasoline Station - Self Serve

--Details--

Status:	Active
Year of Installation:	
Corrosion Protection:	
Capacity:	15000
Tank Fuel Type:	Liquid Fuel Single Wall AST - Gasoline
Status:	Active
Year of Installation:	
Corrosion Protection:	
Capacity:	15000
Tank Fuel Type:	Liquid Fuel Single Wall AST - Diesel

2	***6 of 29***	***S/0.0***	***254.9 / 0.00***	***REGIONAL MUNICIPALITY OF YORK ENGINEERING DEPT 3525 BASELINE RD***	***FSTH***

Map Key	Number of Records	Direction/ Distance (m)	Elev/Diff (m)	Site	DB
				SUTTON WEST ON L0E 1R0	

License Issue Date: 9/18/1995
Tank Status: Licensed
Tank Status As Of: December 2008
Operation Type: Private Fuel Outlet
Facility Type: Gasoline Station - Self Serve

--Details--
Status: Active
Year of Installation: 1990
Corrosion Protection:
Capacity: 9092
Tank Fuel Type: Liquid Fuel Single Wall UST - Diesel

2	7 of 29	S/0.0	254.9 / 0.00	THE REGIONAL MUNICIPALITY OF YORK ATTN WORKS DEPT - GARY COSGROVE 3525 BASELINE RD SUTTON WEST ON	DTNK

Delisted Expired Fuel Safety Facilities

Instance No: 10353848
Status: EXPIRED
Instance ID: 16189
Instance Type: FS Facility
Instance Creation Dt:
Instance Install Dt:
Item Description:
Manufacturer:
Model:
Serial No:
ULC Standard:
Quantity:
Unit of Measure:
Overfill Prot Type:
Creation Date:
Next Periodic Str DT:
TSSA Base Sched Cycle 2:
TSSAMax Hazard Rank 1:
TSSA Risk Based Periodic Yn:
TSSA Volume of Directives:
TSSA Periodic Exempt:
TSSA Statutory Interval:
TSSA Recd Insp Interva:
TSSA Recd Tolerance:
TSSA Program Area:
TSSA Program Area 2:
Description: FS Propane Refill Cntr - Cylr Fill
Original Source: EXP
Record Date: Up to Mar 2012

Expired Date:
Max Hazard Rank:
Facility Location:
Facility Type:
Fuel Type 2:
Fuel Type 3:
Panam Related:
Panam Venue Nm:
External Identifier:
Item:
Piping Steel:
Piping Galvanized:
Tank Single Wall St:
Piping Underground:
Tank Underground:
Source:

2	8 of 29	S/0.0	254.9 / 0.00	THE REGIONAL MUNICIPALITY OF YORK ATTN WORKS DEPT - GARY COSGROVE 3525 BASELINE RD SUTTON WEST ON	DTNK

Delisted Expired Fuel Safety Facilities

Instance No:	11658202	***Expired Date:***	
Status:	EXPIRED	***Max Hazard Rank:***	
Instance ID:	96726	***Facility Location:***	
Instance Type:	FS Propane Tank	***Facility Type:***	
Instance Creation Dt:		***Fuel Type 2:***	
Instance Install Dt:		***Fuel Type 3:***	
Item Description:		***Panam Related:***	
Manufacturer:		***Panam Venue Nm:***	
Model:		***External Identifier:***	
Serial No:		***Item:***	
ULC Standard:		***Piping Steel:***	
Quantity:		***Piping Galvanized:***	
Unit of Measure:		***Tank Single Wall St:***	
Overfill Prot Type:		***Piping Underground:***	
Creation Date:		***Tank Underground:***	
Next Periodic Str DT:		***Source:***	
TSSA Base Sched Cycle 2:			
TSSAMax Hazard Rank 1:			
TSSA Risk Based Periodic Yn:			
TSSA Volume of Directives:			
TSSA Periodic Exempt:			
TSSA Statutory Interval:			
TSSA Recd Insp Interva:			
TSSA Recd Tolerance:			
TSSA Program Area:			
TSSA Program Area 2:			
Description:	FS Propane Tank		
Original Source:	EXP		
Record Date:	Up to Mar 2012		

2	***9 of 29***	***S/0.0***	***254.9 / 0.00***	***The Regional Municipality of York North District Maintenance Depot 3525 Baseline Road Georgina ON***	***GEN***

Generator No:	ON6695973
SIC Code:	913910
SIC Description:	Other Local Municipal and Regional Public Administration
Approval Years:	2009
PO Box No:	
Country:	
Status:	
Co Admin:	
Choice of Contact:	
Phone No Admin:	
Contaminated Facility:	
MHSW Facility:	

Detail(s)

Waste Class:	212
Waste Class Name:	ALIPHATIC SOLVENTS
Waste Class:	213
Waste Class Name:	PETROLEUM DISTILLATES
Waste Class:	221
Waste Class Name:	LIGHT FUELS
Waste Class:	252
Waste Class Name:	WASTE OILS & LUBRICANTS

Map Key	Number of Records	Direction/ Distance (m)	Elev/Diff (m)	Site	DB

Waste Class: 263
Waste Class Name: ORGANIC LABORATORY CHEMICALS

2	10 of 29	S/0.0	254.9 / 0.00	The Regional Municipality of York North District Maintenance Depot 3525 Baseline Road Georgina ON	GEN

Generator No: ON6695973
SIC Code: 913910
SIC Description: Other Local Municipal and Regional Public Administration
Approval Years: 2010
PO Box No:
Country:
Status:
Co Admin:
Choice of Contact:
Phone No Admin:
Contaminated Facility:
MHSW Facility:

Detail(s)

Waste Class: 252
Waste Class Name: WASTE OILS & LUBRICANTS

Waste Class: 213
Waste Class Name: PETROLEUM DISTILLATES

Waste Class: 221
Waste Class Name: LIGHT FUELS

Waste Class: 263
Waste Class Name: ORGANIC LABORATORY CHEMICALS

Waste Class: 212
Waste Class Name: ALIPHATIC SOLVENTS

2	11 of 29	S/0.0	254.9 / 0.00	The Regional Municipality of York North District Maintenance Depot 3525 Baseline Road Georgina ON	GEN

Generator No: ON6695973
SIC Code: 913910
SIC Description: Other Local Municipal and Regional Public Administration
Approval Years: 2011
PO Box No:
Country:
Status:
Co Admin:
Choice of Contact:
Phone No Admin:
Contaminated Facility:
MHSW Facility:

Detail(s)

Waste Class: 221
Waste Class Name: LIGHT FUELS

Waste Class: 263
Waste Class Name: ORGANIC LABORATORY CHEMICALS

Waste Class: 213
Waste Class Name: PETROLEUM DISTILLATES

Waste Class: 212
Waste Class Name: ALIPHATIC SOLVENTS

Waste Class: 252
Waste Class Name: WASTE OILS & LUBRICANTS

2	12 of 29	S/0.0	254.9 / 0.00	3525 Baseline Rd Georgina ON	SPL

Ref No: 2648-993T7D
Year:
Incident Dt: 27-JUN-13
Dt MOE Arvl on Scn:
MOE Reported Dt: 27-JUN-13
Dt Document Closed:
Site No:
MOE Response: Referral to others
Site County/District:
Site Geo Ref Meth:
Site District Office:
Nearest Watercourse:
Site Name: Field<UNOFFICIAL>
Site Address: 3525 Baseline Rd
Site Region:
Site Municipality: Georgina
Site Lot:
Site Conc:
Site Geo Ref Accu:
Site Map Datum:
Northing:
Easting:
Incident Cause: Unknown / N/A
Incident Preceding Spill:
Environment Impact: Not Anticipated
Health Env Consequence:
Nature of Impact: Air Pollution
Contaminant Qty: 0 other - see incident description
Contaminant Qty 1: 0
Contaminant Unit: other - see incident description
Client Type:
Source Type:
Contaminant Code: 35
Contaminant Name: NATURAL GAS (METHANE)
Contaminant Limit 1:
Contam Limit Freq 1:
Contaminant UN No 1:
Receiving Medium:
Incident Reason: Unknown / N/A
Incident Summary: Enbridge, 1 inch EHP, hit by tractor
Activity Preceding Spill:
Property 2nd Watershed:
Property Tertiary Watershed:
Sector Type: Pipeline/Components
SAC Action Class: Air Spills - Gases and Vapours
Call Report Locatn Geodata:
Time Reported:
System Facility Address:
Client Name:

Municipality No:
Nature of Damage:
Discharger Report:
Material Group:
Impact to Health:
Agency Involved:

Map Key	Number of Records	Direction/ Distance (m)	Elev/Diff (m)	Site	DB

2 | **13 of 29** | **S/0.0** | **254.9 / 0.00** | **REGIONAL MUNICIPALITY OF YORK ENGINEERING DEPT 3525 BASELINE RD SUTTON WEST ON** | **FST**

Inventory No:	11684867	**Tank Material:**	Fiberglass (FRP)
Inventory Status:	Active	**Corrosion Protect:**	Fiberglass
Installation Year:		**Overfill Protection:**	
Capacity:		**Inventory Context:**	FS Liquid Fuel Tank
Capacity Unit:		**Inventory Item:**	FS LIQUID FUEL TANK
Tank Type:			
Manufacturer:			
Model:			
Description:	UNDERGROUND TANK		

2 | **14 of 29** | **S/0.0** | **254.9 / 0.00** | **YORK REGION ATTN GARY COSGROVE 3525 BASELINE RD GEORGINA ON** | **FST**

Inventory No:	11653521	**Tank Material:**	Steel
Inventory Status:	Active	**Corrosion Protect:**	Coating
Installation Year:		**Overfill Protection:**	
Capacity:		**Inventory Context:**	FS Liquid Fuel Tank
Capacity Unit:		**Inventory Item:**	FS LIQUID FUEL TANK
Tank Type:			
Manufacturer:			
Model:			
Description:			

2 | **15 of 29** | **S/0.0** | **254.9 / 0.00** | **YORK REGION ATTN GARY COSGROVE 3525 BASELINE RD GEORGINA ON** | **FST**

Inventory No:	11653531	**Tank Material:**	Steel
Inventory Status:	Active	**Corrosion Protect:**	Coating
Installation Year:		**Overfill Protection:**	
Capacity:		**Inventory Context:**	FS Liquid Fuel Tank
Capacity Unit:		**Inventory Item:**	FS LIQUID FUEL TANK
Tank Type:			
Manufacturer:			
Model:			
Description:			

2 | **16 of 29** | **S/0.0** | **254.9 / 0.00** | **The Regional Municipality of York North District Maintenance Depot 3525 Baseline Road Georgina ON** | **GEN**

Generator No:	ON6695973
SIC Code:	913910
SIC Description:	Other Local Municipal and Regional Public Administration
Approval Years:	2012
PO Box No:	
Country:	
Status:	
Co Admin:	
Choice of Contact:	
Phone No Admin:	

Map Key	Number of Records	Direction/ Distance (m)	Elev/Diff (m)	Site	DB

Contaminated Facility:
MHSW Facility:

Detail(s)

Waste Class: 212
Waste Class Name: ALIPHATIC SOLVENTS

Waste Class: 213
Waste Class Name: PETROLEUM DISTILLATES

Waste Class: 263
Waste Class Name: ORGANIC LABORATORY CHEMICALS

Waste Class: 252
Waste Class Name: WASTE OILS & LUBRICANTS

Waste Class: 221
Waste Class Name: LIGHT FUELS

2	17 of 29	S/0.0	254.9 / 0.00	The Regional Municipality of York North District Maintenance Depot 3525 Baseline Road Georgina ON	GEN

Generator No: ON6695973
SIC Code: 913910
SIC Description:
Approval Years: 2013
PO Box No:
Country:
Status:
Co Admin:
Choice of Contact:
Phone No Admin:
Contaminated Facility:
MHSW Facility:

Detail(s)

Waste Class: 263
Waste Class Name: ORGANIC LABORATORY CHEMICALS

Waste Class: 252
Waste Class Name: WASTE OILS & LUBRICANTS

Waste Class: 212
Waste Class Name: ALIPHATIC SOLVENTS

Waste Class: 221
Waste Class Name: LIGHT FUELS

Waste Class: 213
Waste Class Name: PETROLEUM DISTILLATES

Waste Class: 251
Waste Class Name: OIL SKIMMINGS & SLUDGES

2	18 of 29	S/0.0	254.9 / 0.00	The Regional Municipality of York North District Maintenance Depot 3525 Baseline Road Georgina ON L0E 1R0	GEN

Generator No:	ON6695973
SIC Code:	913910
SIC Description:	913910
Approval Years:	2015
PO Box No:	
Country:	Canada
Status:	
Co Admin:	JOHN FOSTER
Choice of Contact:	CO_OFFICIAL
Phone No Admin:	905-722-4966 Ext.
Contaminated Facility:	No
MHSW Facility:	No

Detail(s)

Waste Class:	221
Waste Class Name:	LIGHT FUELS
Waste Class:	251
Waste Class Name:	OIL SKIMMINGS & SLUDGES
Waste Class:	213
Waste Class Name:	PETROLEUM DISTILLATES
Waste Class:	212
Waste Class Name:	ALIPHATIC SOLVENTS
Waste Class:	252
Waste Class Name:	WASTE OILS & LUBRICANTS
Waste Class:	263
Waste Class Name:	ORGANIC LABORATORY CHEMICALS

2	***19 of 29***	***S/0.0***	***254.9 / 0.00***	***The Regional Municipality of York North District Maintenance Depot 3525 Baseline Road Georgina ON L0E 1R0***	***GEN***

Generator No:	ON6695973
SIC Code:	913910
SIC Description:	913910
Approval Years:	2016
PO Box No:	
Country:	Canada
Status:	
Co Admin:	JOHN FOSTER
Choice of Contact:	CO_OFFICIAL
Phone No Admin:	905-722-4966 Ext.
Contaminated Facility:	No
MHSW Facility:	No

Detail(s)

Waste Class:	251
Waste Class Name:	OIL SKIMMINGS & SLUDGES
Waste Class:	213
Waste Class Name:	PETROLEUM DISTILLATES
Waste Class:	263
Waste Class Name:	ORGANIC LABORATORY CHEMICALS

Map Key	Number of Records	Direction/ Distance (m)	Elev/Diff (m)	Site	DB

Waste Class: 252
Waste Class Name: WASTE OILS & LUBRICANTS

Waste Class: 212
Waste Class Name: ALIPHATIC SOLVENTS

Waste Class: 221
Waste Class Name: LIGHT FUELS

2	20 of 29	S/0.0	254.9 / 0.00	The Regional Municipality of York North District Maintenance Depot 3525 Baseline Road Georgina ON L0E 1R0	GEN

Generator No: ON6695973
SIC Code: 913910
SIC Description: 913910
Approval Years: 2014
PO Box No:
Country: Canada
Status:
Co Admin: JOHN FOSTER
Choice of Contact: CO_OFFICIAL
Phone No Admin: 905-722-4966 Ext.
Contaminated Facility: No
MHSW Facility: No

Detail(s)

Waste Class: 213
Waste Class Name: PETROLEUM DISTILLATES

Waste Class: 221
Waste Class Name: LIGHT FUELS

Waste Class: 212
Waste Class Name: ALIPHATIC SOLVENTS

Waste Class: 263
Waste Class Name: ORGANIC LABORATORY CHEMICALS

Waste Class: 251
Waste Class Name: OIL SKIMMINGS & SLUDGES

Waste Class: 252
Waste Class Name: WASTE OILS & LUBRICANTS

2	21 of 29	S/0.0	254.9 / 0.00	The Regional Municipality of York Transportation and Transit North District Maintenance Depot 3525 Baseline Road Georgina ON L0E 1R0	GEN

Generator No: ON6695973
SIC Code:
SIC Description:
Approval Years: As of Dec 2018
PO Box No:
Country: Canada
Status: Registered
Co Admin:
Choice of Contact:
Phone No Admin:

Contaminated Facility:
MHSW Facility:

Detail(s)

Waste Class: 251 L
Waste Class Name: Waste oils/sludges (petroleum based)

Waste Class: 252 L
Waste Class Name: Waste crankcase oils and lubricants

Waste Class: 263 I
Waste Class Name: Misc. waste organic chemicals

Waste Class: 212 L
Waste Class Name: Aliphatic solvents and residues

Waste Class: 213 I
Waste Class Name: Petroleum distillates

Waste Class: 221 I
Waste Class Name: Light fuels

2	22 of 29	S/0.0	254.9 / 0.00	Enbridge Gas Distribution Inc. 3525 Baseline Road Georgina ON	SPL

Ref No: 8340-ALQKRS
Year:
Incident Dt: 4/24/2017
Dt MOE Arvl on Scn:
MOE Reported Dt: 4/24/2017
Dt Document Closed:
Site No:
MOE Response:
Site County/District: Regional Municipality of York
Site Geo Ref Meth:
Site District Office: York-Durham
Nearest Watercourse:
Site Name: Region of York - Maintenance<UNOFFICIAL>
Site Address: 3525 Baseline Road
Site Region: Central
Site Municipality: Georgina
Site Lot:
Site Conc:
Site Geo Ref Accu:
Site Map Datum:
Northing:
Easting:
Incident Cause:
Incident Preceding Spill: Leak/Break
Environment Impact:
Health Env Consequence:
Nature of Impact:
Contaminant Qty: 0 other - see incident description
Contaminant Qty 1: 0
Contaminant Unit: other - see incident description
Client Type: Corporation
Source Type: Pipeline/Components
Contaminant Code: 35
Contaminant Name: NATURAL GAS (METHANE)
Contaminant Limit 1:
Contam Limit Freq 1:
Contaminant UN No 1: 1075

Municipality No:
Nature of Damage:
Discharger Report:
Material Group:
Impact to Health: 0 - No Impact
Agency Involved:

Receiving Medium: Air
Incident Reason: Operator/Human Error
Incident Summary: TSSA FSB: 1.25" P IP, safe, no media/evac, FD on scene
Activity Preceding Spill:
Property 2nd Watershed:
Property Tertiary Watershed:
Sector Type: Other
SAC Action Class:
Call Report Locatn Geodata:
Time Reported:
System Facility Address:
Client Name: Enbridge Gas Distribution Inc.

2	23 of 29	S/0.0	254.9 / 0.00	Enbridge Gas Distribution Inc. 3525 Baseline Road, Sutton Georgina ON	SPL

Ref No: 1645-AR7SJR
Year:
Incident Dt: 9/14/2017
Dt MOE Arvl on Scn:
MOE Reported Dt: 9/14/2017
Dt Document Closed: 10/21/2017
Municipality No:
Nature of Damage:
Discharger Report:
Material Group:
Impact to Health: 2 - Minor Environment
Agency Involved:
Site No: NA
MOE Response: No
Site County/District: Regional Municipality of York
Site Geo Ref Meth:
Site District Office: York-Durham
Nearest Watercourse:
Site Name: York Regional Police and Works Yard<UNOFFICIAL>
Site Address: 3525 Baseline Road, Sutton
Site Region: Central
Site Municipality: Georgina
Site Lot:
Site Conc:
Site Geo Ref Accu:
Site Map Datum:
Northing:
Easting:
Incident Cause:
Incident Preceding Spill: Leak/Break
Environment Impact:
Health Env Consequence:
Nature of Impact:
Contaminant Qty: 0 other - see incident description
Contaminant Qty 1: 0
Contaminant Unit: other - see incident description
Client Type: Corporation
Source Type: Pipeline/Components
Contaminant Code: 35
Contaminant Name: NATURAL GAS (METHANE)
Contaminant Limit 1:
Contam Limit Freq 1:
Contaminant UN No 1: 1075
Receiving Medium: Air
Incident Reason: Operator/Human Error
Incident Summary: TSSA FSB; 1¼ pl IP service line damaged; made safe
Activity Preceding Spill:
Property 2nd Watershed:
Property Tertiary Watershed:
Sector Type: Unknown / N/A
SAC Action Class: TSSA - Fuel Safety Branch - Hydrocarbon Fuel Release/Spill
Call Report Locatn Geodata:
Time Reported:

Map Key	Number of Records	Direction/ Distance (m)	Elev/Diff (m)	Site	DB

System Facility Address:
Client Name: Enbridge Gas Distribution Inc.

2	24 of 29	S/0.0	254.9 / 0.00	The Regional Municipality of York Transportation and Transit North District Maintenance Depot 3525 Baseline Road Georgina ON L0E 1R0	GEN

Generator No: ON6695973
SIC Code:
SIC Description:
Approval Years: As of Jul 2020
PO Box No:
Country: Canada
Status: Registered
Co Admin:
Choice of Contact:
Phone No Admin:
Contaminated Facility:
MHSW Facility:

Detail(s)

Waste Class: 252 L
Waste Class Name: Waste crankcase oils and lubricants

Waste Class: 251 L
Waste Class Name: Waste oils/sludges (petroleum based)

Waste Class: 213 I
Waste Class Name: Petroleum distillates

Waste Class: 212 L
Waste Class Name: Aliphatic solvents and residues

Waste Class: 263 I
Waste Class Name: Misc. waste organic chemicals

Waste Class: 221 I
Waste Class Name: Light fuels

Waste Class: 148 L
Waste Class Name: Misc. wastes and inorganic chemicals

2	25 of 29	S/0.0	254.9 / 0.00	PIPELINE HIT 1.25" 3525 BASELINE RD,,GEORGINA,ON,L0E 1R0,CA ON	PINC

Incident Id:
Incident No: 2155224
Incident Reported Dt: 9/15/2017
Type: FS-Pipeline Incident
Status Code:
Tank Status: Pipeline Damage Reason Est
Task No:
Spills Action Centre:
Fuel Type:
Fuel Occurrence Tp:
Date of Occurrence:
Occurrence Start Dt:
Depth:
Pipe Material:
Fuel Category:
Health Impact:
Environment Impact:
Property Damage:
Service Interrupt:
Enforce Policy:
Public Relation:
Pipeline System:
PSIG:
Attribute Category:
Regulator Location:
Method Details:

Map Key	Number of Records	Direction/ Distance (m)	Elev/Diff (m)	Site	DB

Customer Acct Name: PIPELINE HIT 1.25"
Incident Address: 3525 BASELINE RD,,GEORGINA,ON,L0E 1R0,CA
Operation Type:
Pipeline Type:
Regulator Type:
Summary:
Reported By:
Affiliation:
Occurrence Desc:
Damage Reason:
Notes:

2	26 of 29	S/0.0	254.9 / 0.00	The Regional Municipality of York Transportation and Transit North District Maintenance Depot 3525 Baseline Road Georgina ON L0E 1R0	GEN

Generator No: ON6695973
SIC Code:
SIC Description:
Approval Years: As of Nov 2021
PO Box No:
Country: Canada
Status: Registered
Co Admin:
Choice of Contact:
Phone No Admin:
Contaminated Facility:
MHSW Facility:

Detail(s)

Waste Class: 213 I
Waste Class Name: Petroleum distillates

Waste Class: 252 L
Waste Class Name: Waste crankcase oils and lubricants

Waste Class: 221 I
Waste Class Name: Light fuels

Waste Class: 263 I
Waste Class Name: Misc. waste organic chemicals

Waste Class: 148 L
Waste Class Name: Misc. wastes and inorganic chemicals

Waste Class: 251 L
Waste Class Name: Waste oils/sludges (petroleum based)

Waste Class: 212 L
Waste Class Name: Aliphatic solvents and residues

2	27 of 29	S/0.0	254.9 / 0.00	3525 Baseline Road Georgina ON	SPL

Ref No: 4620-BYLSHG
Year:
Incident Dt: 2021/02/26
Dt MOE Arvl on Scn:
MOE Reported Dt: 2021/02/26
Municipality No:
Nature of Damage:
Discharger Report:
Material Group:
Impact to Health: 4 - Medium Environment

Map Key	Number of Records	Direction/ Distance (m)	Elev/Diff (m)	Site	DB

Dt Document Closed:	
Site No:	NA
MOE Response:	Yes
Site County/District:	Regional Municipality of York
Site Geo Ref Meth:	
Site District Office:	York-Durham
Nearest Watercourse:	
Site Name:	Site<UNOFFICIAL>
Site Address:	3525 Baseline Road
Site Region:	Central
Site Municipality:	Georgina
Site Lot:	
Site Conc:	
Site Geo Ref Accu:	
Site Map Datum:	
Northing:	4905216.93
Easting:	625555.18
Incident Cause:	
Incident Preceding Spill:	Leak/Break
Environment Impact:	
Health Env Consequence:	
Nature of Impact:	
Contaminant Qty:	1800 L
Contaminant Qty 1:	1800
Contaminant Unit:	L
Client Type:	
Source Type:	Truck - Tanker
Contaminant Code:	46
Contaminant Name:	BRINE WATER
Contaminant Limit 1:	
Contam Limit Freq 1:	
Contaminant UN No 1:	n/a
Receiving Medium:	Land
Incident Reason:	Operator/Human Error
Incident Summary:	Rufat Contracting: 1800L of brine to cb
Activity Preceding Spill:	
Property 2nd Watershed:	
Property Tertiary Watershed:	
Sector Type:	Miscellaneous Communal
SAC Action Class:	
Call Report Locatn Geodata:	
Time Reported:	
System Facility Address:	
Client Name:	

Agency Involved:

2	*28 of 29*	*S/0.0*	*254.9 / 0.00*	***The Regional Municipality of York Transportation and Transit North District Maintenance Depot 3525 Baseline Road Georgina ON L0E 1R0***	***GEN***

Generator No:	ON6695973
SIC Code:	
SIC Description:	
Approval Years:	As of Oct 2022
PO Box No:	
Country:	Canada
Status:	Registered
Co Admin:	
Choice of Contact:	
Phone No Admin:	
Contaminated Facility:	
MHSW Facility:	

Detail(s)

Waste Class: 212 L
Waste Class Name: ALIPHATIC SOLVENTS

Waste Class: 252 L
Waste Class Name: WASTE OILS & LUBRICANTS

Waste Class: 213 I
Waste Class Name: PETROLEUM DISTILLATES

Waste Class: 148 L
Waste Class Name: INORGANIC LABORATORY CHEMICALS

Waste Class: 263 I
Waste Class Name: ORGANIC LABORATORY CHEMICALS

Waste Class: 221 I
Waste Class Name: LIGHT FUELS

Waste Class: 251 L
Waste Class Name: OIL SKIMMINGS & SLUDGES

2	29 of 29	S/0.0	254.9 / 0.00	3525 Baseline Road, Georgina GEORGINA ON	SPL

Ref No: 1-EEK2X
Year:
Incident Dt: 4/29/2021 10:15:00 PM
Dt MOE Arvl on Scn:
MOE Reported Dt: 4/29/2021 11:12:05 PM
Dt Document Closed:
Site No:
MOE Response: Desktop Response
Site County/District:
Site Geo Ref Meth:
Site District Office: York Durham District Office
Nearest Watercourse:
Site Name:
Site Address: 3525 Baseline Road, Georgina
Site Region: REGIONAL MUNICIPALITY OF YORK
Site Municipality: GEORGINA
Site Lot:
Site Conc:
Site Geo Ref Accu:
Site Map Datum:
Northing:
Easting:
Incident Cause:
Incident Preceding Spill: Accident/Collision
Environment Impact: 1 Minor Impact
Health Env Consequence:
Nature of Impact:
Contaminant Qty: 250 litre (L)
Contaminant Qty 1:
Contaminant Unit:
Client Type: Private Business
Source Type: Transformer
Contaminant Code:
Contaminant Name: TRANSFORMER OIL (N.O.S.)
Contaminant Limit 1:
Contam Limit Freq 1:
Contaminant UN No 1:
Receiving Medium: Land

Municipality No:
Nature of Damage:
Discharger Report:
Material Group:
Impact to Health: 0 No Impact
Agency Involved:

Incident Reason:	Human error (Specify)
Incident Summary:	Hydro One: 250 L non-PCB suspect mineral oil to ground, cb
Activity Preceding Spill:	Normal operations
Property 2nd Watershed:	Eastern Georgian Bay
Property Tertiary Watershed:	02EC-Black River - Lake Simcoe
Sector Type:	HYDRO-ELECTRIC POWER GENERATION
SAC Action Class:	
Call Report Locatn Geodata:	{"integration_ids":["PR00003232250"],"wkts":["POINT (-79.4196618000 44.2881995000)"],"creation_date":"2021-04-30"}
Time Reported:	
System Facility Address:	
Client Name:	HYDRO ONE INC.

3	1 of 1	ENE/0.0	254.9 / 0.00	3525 Baseline Road lot 23 con 5 Sutton ON	WWIS

Well ID:	7394936	**Flowing (Y/N):**	
Construction Date:		**Flow Rate:**	
Use 1st:	Monitoring	**Data Entry Status:**	
Use 2nd:		**Data Src:**	
Final Well Status:	Observation Wells	**Date Received:**	08/20/2021
Water Type:		**Selected Flag:**	TRUE
Casing Material:		**Abandonment Rec:**	
Audit No:	WZR7HDZT	**Contractor:**	7732
Tag:	A326580	**Form Version:**	9
Constructn Method:		**Owner:**	
Elevation (m):		**County:**	YORK
Elevatn Reliabilty:		**Lot:**	023
Depth to Bedrock:		**Concession:**	05
Well Depth:		**Concession Name:**	CON
Overburden/Bedrock:		**Easting NAD83:**	
Pump Rate:		**Northing NAD83:**	
Static Water Level:		**Zone:**	
Clear/Cloudy:		**UTM Reliability:**	

Municipality:	GEORGINA TOWNSHIP (NORTH GWILLIMBURY)
Site Info:	
PDF URL (Map):	https://d2khazk8e83rdv.cloudfront.net/moe_mapping/downloads/2Water/Wells_pdfs/739\7394936.pdf

Additional Detail(s) (Map)

Well Completed Date:	08/12/2021
Year Completed:	2021
Depth (m):	3.8
Latitude:	44.2893251997684
Longitude:	-79.4188383824644
X:	-79.41883822931709
Y:	44.28932519830612
Path:	739\7394936.pdf

Bore Hole Information

Bore Hole ID:	1008750566	**Elevation:**	
DP2BR:		**Elevrc:**	
Spatial Status:		**Zone:**	17
Code OB:		**East83:**	626151.00
Code OB Desc:		**North83:**	4905224.00
Open Hole:		**Org CS:**	UTM83
Cluster Kind:		**UTMRC:**	4
Date Completed:	08/12/2021	**UTMRC Desc:**	margin of error : 30 m - 100 m
Remarks:		**Location Method:**	wwr
Location Method Desc:	on Water Well Record		

Elevrc Desc:
Location Source Date:
Improvement Location Source:
Improvement Location Method:
Source Revision Comment:
Supplier Comment:

Overburden and Bedrock Materials Interval

Formation ID:	1008750916
Layer:	1
Color:	6
General Color:	BROWN
Material 1:	05
Material 1 Desc:	CLAY
Material 2:	28
Material 2 Desc:	SAND
Material 3:	
Material 3 Desc:	
Formation Top Depth:	0.0
Formation End Depth:	3.799999952316284
Formation End Depth UOM:	m

Annular Space/Abandonment Sealing Record

Plug ID:	1008751235
Layer:	2
Plug From:	0.30000001192092896
Plug To:	2.0
Plug Depth UOM:	m

Annular Space/Abandonment Sealing Record

Plug ID:	1008751133
Layer:	1
Plug From:	
Plug To:	
Plug Depth UOM:	m

Annular Space/Abandonment Sealing Record

Plug ID:	1008751236
Layer:	3
Plug From:	2.0
Plug To:	3.799999952316284
Plug Depth UOM:	m

Annular Space/Abandonment Sealing Record

Plug ID:	1008751234
Layer:	1
Plug From:	0.0
Plug To:	0.30000001192092896
Plug Depth UOM:	m

Method of Construction & Well

Use

Method Construction ID: 1008750766
Method Construction Code: E
Method Construction: Auger
Other Method Construction:

Pipe Information

Pipe ID: 1008750685
Casing No: 0
Comment:
Alt Name:

Construction Record - Casing

Casing ID: 1008751000
Layer: 1
Material: 5
Open Hole or Material: PLASTIC
Depth From: 0.0
Depth To: 2.299999952316284
Casing Diameter: 5.0
Casing Diameter UOM: cm
Casing Depth UOM: m

Construction Record - Screen

Screen ID: 1008751050
Layer: 1
Slot: 10
Screen Top Depth: 2.299999952316284
Screen End Depth: 3.799999952316284
Screen Material: 5
Screen Depth UOM: m
Screen Diameter UOM: cm
Screen Diameter: 6.300000190734863

Results of Well Yield Testing

Pumping Test Method Desc:
Pump Test ID: 1008750686
Pump Set At:
Static Level:
Final Level After Pumping:
Recommended Pump Depth:
Pumping Rate:
Flowing Rate:
Recommended Pump Rate:
Levels UOM: m
Rate UOM: LPM
Water State After Test Code:
Water State After Test:
Pumping Test Method:
Pumping Duration HR:
Pumping Duration MIN:
Flowing:

Hole Diameter

Hole ID: 1008751095
Diameter: 11.399999618530273

Depth From:	0.0
Depth To:	3.799999952316284
Hole Depth UOM:	m
Hole Diameter UOM:	cm

Map Key	Number of Records	Direction/ Distance (m)	Elev/Diff (m)	Site	DB
4	1 of 1	N/0.0	252.8 / -2.08	3525 Baseline Road lot 23 con 5 Sutton ON	WWIS

Well ID:	7394935	**Flowing (Y/N):**	
Construction Date:		**Flow Rate:**	
Use 1st:	Monitoring	**Data Entry Status:**	
Use 2nd:		**Data Src:**	
Final Well Status:	Observation Wells	**Date Received:**	08/20/2021
Water Type:		**Selected Flag:**	TRUE
Casing Material:		**Abandonment Rec:**	
Audit No:	T4B784JB	**Contractor:**	7732
Tag:	A326579	**Form Version:**	9
Constructn Method:		**Owner:**	
Elevation (m):		**County:**	YORK
Elevatn Reliabilty:		**Lot:**	023
Depth to Bedrock:		**Concession:**	05
Well Depth:		**Concession Name:**	CON
Overburden/Bedrock:		**Easting NAD83:**	
Pump Rate:		**Northing NAD83:**	
Static Water Level:		**Zone:**	
Clear/Cloudy:		**UTM Reliability:**	

Municipality: GEORGINA TOWNSHIP (NORTH GWILLIMBURY)
Site Info:

PDF URL (Map): https://d2khazk8e83rdv.cloudfront.net/moe_mapping/downloads/2Water/Wells_pdfs/739\7394935.pdf

Additional Detail(s) (Map)

Well Completed Date:	08/12/2021
Year Completed:	2021
Depth (m):	3.8
Latitude:	44.2903065240011
Longitude:	-79.4194888848313
X:	-79.4194887323535
Y:	44.290306522356715
Path:	739\7394935.pdf

Bore Hole Information

Bore Hole ID:	1008750563	**Elevation:**	
DP2BR:		**Elevrc:**	
Spatial Status:		**Zone:**	17
Code OB:		**East83:**	626097.00
Code OB Desc:		**North83:**	4905332.00
Open Hole:		**Org CS:**	UTM83
Cluster Kind:		**UTMRC:**	4
Date Completed:	08/12/2021	**UTMRC Desc:**	margin of error : 30 m - 100 m
Remarks:		**Location Method:**	wwr

Location Method Desc: on Water Well Record
Elevrc Desc:
Location Source Date:
Improvement Location Source:
Improvement Location Method:
Source Revision Comment:
Supplier Comment:

Overburden and Bedrock

Materials Interval

Formation ID:	1008750915
Layer:	1
Color:	6
General Color:	BROWN
Material 1:	05
Material 1 Desc:	CLAY
Material 2:	28
Material 2 Desc:	SAND
Material 3:	
Material 3 Desc:	
Formation Top Depth:	0.0
Formation End Depth:	3.799999952316284
Formation End Depth UOM:	m

Annular Space/Abandonment Sealing Record

Plug ID:	1008751132
Layer:	1
Plug From:	
Plug To:	
Plug Depth UOM:	m

Annular Space/Abandonment Sealing Record

Plug ID:	1008751233
Layer:	3
Plug From:	2.0
Plug To:	3.799999952316284
Plug Depth UOM:	m

Annular Space/Abandonment Sealing Record

Plug ID:	1008751232
Layer:	2
Plug From:	0.30000001192092896
Plug To:	2.0
Plug Depth UOM:	m

Annular Space/Abandonment Sealing Record

Plug ID:	1008751231
Layer:	1
Plug From:	0.0
Plug To:	0.30000001192092896
Plug Depth UOM:	m

Method of Construction & Well Use

Method Construction ID:	1008750765
Method Construction Code:	E
Method Construction:	Auger
Other Method Construction:	

Pipe Information

Pipe ID: 1008750683
Casing No: 0
Comment:
Alt Name:

Construction Record - Casing

Casing ID: 1008750999
Layer: 1
Material: 5
Open Hole or Material: PLASTIC
Depth From: 0.0
Depth To: 2.299999952316284
Casing Diameter: 5.0
Casing Diameter UOM: cm
Casing Depth UOM: m

Construction Record - Screen

Screen ID: 1008751049
Layer: 1
Slot: 10
Screen Top Depth: 2.299999952316284
Screen End Depth: 3.799999952316284
Screen Material: 5
Screen Depth UOM: m
Screen Diameter UOM: cm
Screen Diameter: 6.300000190734863

Results of Well Yield Testing

Pumping Test Method Desc:
Pump Test ID: 1008750684
Pump Set At:
Static Level:
Final Level After Pumping:
Recommended Pump Depth:
Pumping Rate:
Flowing Rate:
Recommended Pump Rate:
Levels UOM: m
Rate UOM: LPM
Water State After Test Code:
Water State After Test:
Pumping Test Method:
Pumping Duration HR:
Pumping Duration MIN:
Flowing:

Hole Diameter

Hole ID: 1008751094
Diameter: 11.399999618530273
Depth From: 0.0
Depth To: 3.799999952316284
Hole Depth UOM: m
Hole Diameter UOM: cm

5	*1 of 1*	*NW/9.2*	*252.8 / -2.03*	*lot 23 con 5 ON*	*WWIS*

Well ID:	6921554	**Flowing (Y/N):**	
Construction Date:		**Flow Rate:**	
Use 1st:	Domestic	**Data Entry Status:**	
Use 2nd:	0	**Data Src:**	1
Final Well Status:	Water Supply	**Date Received:**	09/09/1991
Water Type:		**Selected Flag:**	TRUE
Casing Material:		**Abandonment Rec:**	
Audit No:	68836	**Contractor:**	5019
Tag:		**Form Version:**	1
Constructn Method:		**Owner:**	
Elevation (m):		**County:**	YORK
Elevatn Reliabilty:		**Lot:**	023
Depth to Bedrock:		**Concession:**	05
Well Depth:		**Concession Name:**	CON
Overburden/Bedrock:		**Easting NAD83:**	
Pump Rate:		**Northing NAD83:**	
Static Water Level:		**Zone:**	
Clear/Cloudy:		**UTM Reliability:**	

Municipality: GEORGINA TOWNSHIP (NORTH GWILLIMBURY)
Site Info:

PDF URL (Map): https://d2khazk8e83rdv.cloudfront.net/moe_mapping/downloads/2Water/Wells_pdfs/692\6921554.pdf

Additional Detail(s) (Map)

Well Completed Date:	06/03/1991
Year Completed:	1991
Depth (m):	79.248
Latitude:	44.2901619758703
Longitude:	-79.4214054468807
X:	-79.42140529459695
Y:	44.290161974410644
Path:	692\6921554.pdf

Bore Hole Information

Bore Hole ID:	10511864	**Elevation:**	
DP2BR:		**Elevrc:**	
Spatial Status:		**Zone:**	17
Code OB:		**East83:**	625944.40
Code OB Desc:		**North83:**	4905313.00
Open Hole:		**Org CS:**	
Cluster Kind:		**UTMRC:**	5
Date Completed:	06/03/1991	**UTMRC Desc:**	margin of error : 100 m - 300 m
Remarks:		**Location Method:**	wwr

Location Method Desc: on Water Well Record
Elevrc Desc:
Location Source Date:
Improvement Location Source:
Improvement Location Method:
Source Revision Comment:
Supplier Comment:

Overburden and Bedrock Materials Interval

Formation ID:	932809371
Layer:	1
Color:	6
General Color:	BROWN
Material 1:	05
Material 1 Desc:	CLAY
Material 2:	13

Material 2 Desc:	BOULDERS
Material 3:	73
Material 3 Desc:	HARD
Formation Top Depth:	0.0
Formation End Depth:	21.0
Formation End Depth UOM:	ft

Overburden and Bedrock Materials Interval

Formation ID:	932809374
Layer:	4
Color:	3
General Color:	BLUE
Material 1:	05
Material 1 Desc:	CLAY
Material 2:	13
Material 2 Desc:	BOULDERS
Material 3:	73
Material 3 Desc:	HARD
Formation Top Depth:	37.0
Formation End Depth:	177.0
Formation End Depth UOM:	ft

Overburden and Bedrock Materials Interval

Formation ID:	932809372
Layer:	2
Color:	3
General Color:	BLUE
Material 1:	05
Material 1 Desc:	CLAY
Material 2:	13
Material 2 Desc:	BOULDERS
Material 3:	73
Material 3 Desc:	HARD
Formation Top Depth:	21.0
Formation End Depth:	36.0
Formation End Depth UOM:	ft

Overburden and Bedrock Materials Interval

Formation ID:	932809376
Layer:	6
Color:	2
General Color:	GREY
Material 1:	05
Material 1 Desc:	CLAY
Material 2:	13
Material 2 Desc:	BOULDERS
Material 3:	73
Material 3 Desc:	HARD
Formation Top Depth:	191.0
Formation End Depth:	260.0
Formation End Depth UOM:	ft

Overburden and Bedrock Materials Interval

Formation ID:	932809375

Layer:	5
Color:	2
General Color:	GREY
Material 1:	06
Material 1 Desc:	SILT
Material 2:	12
Material 2 Desc:	STONES
Material 3:	60
Material 3 Desc:	CEMENTED
Formation Top Depth:	177.0
Formation End Depth:	191.0
Formation End Depth UOM:	ft

Overburden and Bedrock Materials Interval

Formation ID:	932809377
Layer:	7
Color:	2
General Color:	GREY
Material 1:	15
Material 1 Desc:	LIMESTONE
Material 2:	80
Material 2 Desc:	POROUS
Material 3:	
Material 3 Desc:	
Formation Top Depth:	260.0
Formation End Depth:	260.0
Formation End Depth UOM:	ft

Overburden and Bedrock Materials Interval

Formation ID:	932809373
Layer:	3
Color:	6
General Color:	BROWN
Material 1:	28
Material 1 Desc:	SAND
Material 2:	77
Material 2 Desc:	LOOSE
Material 3:	
Material 3 Desc:	
Formation Top Depth:	36.0
Formation End Depth:	37.0
Formation End Depth UOM:	ft

Method of Construction & Well Use

Method Construction ID:	966921554
Method Construction Code:	2
Method Construction:	Rotary (Convent.)
Other Method Construction:	

Pipe Information

Pipe ID:	11060434
Casing No:	1
Comment:	
Alt Name:	

Construction Record - Casing

Casing ID:	930825952
Layer:	1
Material:	1
Open Hole or Material:	STEEL
Depth From:	
Depth To:	257.0
Casing Diameter:	5.0
Casing Diameter UOM:	inch
Casing Depth UOM:	ft

Results of Well Yield Testing

Pumping Test Method Desc:	BAILER
Pump Test ID:	996921554
Pump Set At:	
Static Level:	
Final Level After Pumping:	90.0
Recommended Pump Depth:	125.0
Pumping Rate:	14.0
Flowing Rate:	
Recommended Pump Rate:	10.0
Levels UOM:	ft
Rate UOM:	GPM
Water State After Test Code:	1
Water State After Test:	CLEAR
Pumping Test Method:	2
Pumping Duration HR:	2
Pumping Duration MIN:	20
Flowing:	No

Draw Down & Recovery

Pump Test Detail ID:	934366127
Test Type:	
Test Duration:	15
Test Level:	109.0
Test Level UOM:	ft

Draw Down & Recovery

Pump Test Detail ID:	935152394
Test Type:	
Test Duration:	60
Test Level:	125.0
Test Level UOM:	ft

Draw Down & Recovery

Pump Test Detail ID:	934881499
Test Type:	
Test Duration:	45
Test Level:	122.0
Test Level UOM:	ft

Water Details

Water ID:	934004364
Layer:	1
Kind Code:	1
Kind:	FRESH

Water Found Depth: 257.0
Water Found Depth UOM: ft

6	1 of 1	NW/33.8	252.5 / -2.36	lot 9 con 9 ON	WWIS

Well ID:	6921834	**Flowing (Y/N):**	
Construction Date:		**Flow Rate:**	
Use 1st:	Domestic	**Data Entry Status:**	
Use 2nd:		**Data Src:**	1
Final Well Status:	Water Supply	**Date Received:**	03/16/1992
Water Type:		**Selected Flag:**	TRUE
Casing Material:		**Abandonment Rec:**	
Audit No:	44352	**Contractor:**	5019
Tag:		**Form Version:**	1
Constructn Method:		**Owner:**	
Elevation (m):		**County:**	YORK
Elevatn Reliabilty:		**Lot:**	009
Depth to Bedrock:		**Concession:**	09
Well Depth:		**Concession Name:**	CON
Overburden/Bedrock:		**Easting NAD83:**	
Pump Rate:		**Northing NAD83:**	
Static Water Level:		**Zone:**	
Clear/Cloudy:		**UTM Reliability:**	

Municipality: GEORGINA TOWNSHIP (NORTH GWILLIMBURY)
Site Info:

PDF URL (Map): https://d2khazk8e83rdv.cloudfront.net/moe_mapping/downloads/2Water/Wells_pdfs/692\6921834.pdf

Additional Detail(s) (Map)

Well Completed Date: 11/20/1991
Year Completed: 1991
Depth (m): 25.6032
Latitude: 44.2904192297984
Longitude: -79.4217795891052
X: -79.421779436481
Y: 44.29041922832716
Path: 692\6921834.pdf

Bore Hole Information

Bore Hole ID:	10512140	**Elevation:**	
DP2BR:		**Elevrc:**	
Spatial Status:		**Zone:**	17
Code OB:		**East83:**	625914.00
Code OB Desc:		**North83:**	4905341.00
Open Hole:		**Org CS:**	
Cluster Kind:		**UTMRC:**	2
Date Completed:	11/20/1991	**UTMRC Desc:**	margin of error : 3 - 10 m
Remarks:		**Location Method:**	gps

Location Method Desc: from gps
Elevrc Desc:
Location Source Date:
Improvement Location Source:
Improvement Location Method:
Source Revision Comment:
Supplier Comment:

Overburden and Bedrock Materials Interval

Formation ID:	932810969
Layer:	4
Color:	2
General Color:	GREY
Material 1:	05
Material 1 Desc:	CLAY
Material 2:	28
Material 2 Desc:	SAND
Material 3:	12
Material 3 Desc:	STONES
Formation Top Depth:	62.0
Formation End Depth:	78.0
Formation End Depth UOM:	ft

Overburden and Bedrock Materials Interval

Formation ID:	932810967
Layer:	2
Color:	3
General Color:	BLUE
Material 1:	05
Material 1 Desc:	CLAY
Material 2:	13
Material 2 Desc:	BOULDERS
Material 3:	73
Material 3 Desc:	HARD
Formation Top Depth:	18.0
Formation End Depth:	38.0
Formation End Depth UOM:	ft

Overburden and Bedrock Materials Interval

Formation ID:	932810966
Layer:	1
Color:	6
General Color:	BROWN
Material 1:	05
Material 1 Desc:	CLAY
Material 2:	13
Material 2 Desc:	BOULDERS
Material 3:	73
Material 3 Desc:	HARD
Formation Top Depth:	0.0
Formation End Depth:	18.0
Formation End Depth UOM:	ft

Overburden and Bedrock Materials Interval

Formation ID:	932810970
Layer:	5
Color:	7
General Color:	RED
Material 1:	28
Material 1 Desc:	SAND
Material 2:	77
Material 2 Desc:	LOOSE
Material 3:	
Material 3 Desc:	
Formation Top Depth:	78.0
Formation End Depth:	84.0

Formation End Depth UOM:	ft

Overburden and Bedrock Materials Interval

Formation ID:	932810968
Layer:	3
Color:	2
General Color:	GREY
Material 1:	05
Material 1 Desc:	CLAY
Material 2:	66
Material 2 Desc:	DENSE
Material 3:	
Material 3 Desc:	
Formation Top Depth:	38.0
Formation End Depth:	62.0
Formation End Depth UOM:	ft

Method of Construction & Well Use

Method Construction ID:	966921834
Method Construction Code:	2
Method Construction:	Rotary (Convent.)
Other Method Construction:	

Pipe Information

Pipe ID:	11060710
Casing No:	1
Comment:	
Alt Name:	

Construction Record - Casing

Casing ID:	930826272
Layer:	1
Material:	1
Open Hole or Material:	STEEL
Depth From:	
Depth To:	80.0
Casing Diameter:	6.0
Casing Diameter UOM:	inch
Casing Depth UOM:	ft

Construction Record - Screen

Screen ID:	933398070
Layer:	1
Slot:	016
Screen Top Depth:	80.0
Screen End Depth:	84.0
Screen Material:	
Screen Depth UOM:	ft
Screen Diameter UOM:	inch
Screen Diameter:	5.0

Results of Well Yield Testing

Pumping Test Method Desc:	BAILER

Pump Test ID:	996921834
Pump Set At:	
Static Level:	29.0
Final Level After Pumping:	32.0
Recommended Pump Depth:	50.0
Pumping Rate:	15.0
Flowing Rate:	
Recommended Pump Rate:	10.0
Levels UOM:	ft
Rate UOM:	GPM
Water State After Test Code:	1
Water State After Test:	CLEAR
Pumping Test Method:	2
Pumping Duration HR:	2
Pumping Duration MIN:	20
Flowing:	No

Draw Down & Recovery

Pump Test Detail ID:	934882480
Test Type:	Draw Down
Test Duration:	45
Test Level:	32.0
Test Level UOM:	ft

Draw Down & Recovery

Pump Test Detail ID:	934366705
Test Type:	Draw Down
Test Duration:	15
Test Level:	31.0
Test Level UOM:	ft

Draw Down & Recovery

Pump Test Detail ID:	934632866
Test Type:	Draw Down
Test Duration:	30
Test Level:	32.0
Test Level UOM:	ft

Draw Down & Recovery

Pump Test Detail ID:	935148111
Test Type:	Draw Down
Test Duration:	60
Test Level:	32.0
Test Level UOM:	ft

Water Details

Water ID:	934004633
Layer:	1
Kind Code:	1
Kind:	FRESH
Water Found Depth:	78.0
Water Found Depth UOM:	ft

7	*1 of 1*	*NW/35.6*	*251.9 / -2.95*	*lot 8 con 9 ON*	*WWIS*

Well ID:	6922157	**Flowing (Y/N):**	
Construction Date:		**Flow Rate:**	
Use 1st:	Not Used	**Data Entry Status:**	
Use 2nd:	0	**Data Src:**	1
Final Well Status:	Abandoned-Supply	**Date Received:**	02/02/1993
Water Type:		**Selected Flag:**	TRUE
Casing Material:		**Abandonment Rec:**	
Audit No:	110705	**Contractor:**	5019
Tag:		**Form Version:**	1
Constructn Method:		**Owner:**	
Elevation (m):		**County:**	YORK
Elevatn Reliabilty:		**Lot:**	008
Depth to Bedrock:		**Concession:**	09
Well Depth:		**Concession Name:**	CON
Overburden/Bedrock:		**Easting NAD83:**	
Pump Rate:		**Northing NAD83:**	
Static Water Level:		**Zone:**	
Clear/Cloudy:		**UTM Reliability:**	

Municipality: GEORGINA TOWNSHIP (NORTH GWILLIMBURY)
Site Info:

PDF URL (Map): https://d2khazk8e83rdv.cloudfront.net/moe_mapping/downloads/2Water/Wells_pdfs/692\6922157.pdf

Additional Detail(s) (Map)

Well Completed Date: 09/21/1992
Year Completed: 1992
Depth (m):
Latitude: 44.2906162866023
Longitude: -79.4217066268171
X: -79.42170647442069
Y: 44.29061628542799
Path: 692\6922157.pdf

Bore Hole Information

Bore Hole ID:	10512463	**Elevation:**	
DP2BR:		**Elevrc:**	
Spatial Status:		**Zone:**	17
Code OB:		**East83:**	625919.40
Code OB Desc:		**North83:**	4905363.00
Open Hole:		**Org CS:**	
Cluster Kind:		**UTMRC:**	5
Date Completed:	09/21/1992	**UTMRC Desc:**	margin of error : 100 m - 300 m
Remarks:		**Location Method:**	wwr

Location Method Desc: on Water Well Record
Elevrc Desc:
Location Source Date:
Improvement Location Source:
Improvement Location Method:
Source Revision Comment:
Supplier Comment:

Overburden and Bedrock Materials Interval

Formation ID: 932812782
Layer: 1
Color:
General Color:
Material 1: 23
Material 1 Desc: PREVIOUSLY DUG
Material 2:

Material 2 Desc:
Material 3:
Material 3 Desc:
Formation Top Depth:
Formation End Depth:
Formation End Depth UOM: ft

Method of Construction & Well Use

Method Construction ID: 966922157
Method Construction Code: B
Method Construction: Other Method
Other Method Construction:

Pipe Information

Pipe ID: 11061033
Casing No: 1
Comment:
Alt Name:

8	1 of 1	NW/53.2	251.9 / -2.95	lot 8 con 9 ON	WWIS

Well ID:	6922155	**Flowing (Y/N):**	
Construction Date:		**Flow Rate:**	
Use 1st:	Domestic	**Data Entry Status:**	
Use 2nd:	0	**Data Src:**	1
Final Well Status:	Water Supply	**Date Received:**	02/03/1993
Water Type:		**Selected Flag:**	TRUE
Casing Material:		**Abandonment Rec:**	
Audit No:	110706	**Contractor:**	5019
Tag:		**Form Version:**	1
Constructn Method:		**Owner:**	
Elevation (m):		**County:**	YORK
Elevatn Reliabilty:		**Lot:**	008
Depth to Bedrock:		**Concession:**	09
Well Depth:		**Concession Name:**	CON
Overburden/Bedrock:		**Easting NAD83:**	
Pump Rate:		**Northing NAD83:**	
Static Water Level:		**Zone:**	
Clear/Cloudy:		**UTM Reliability:**	

Municipality: GEORGINA TOWNSHIP (NORTH GWILLIMBURY)
Site Info:

PDF URL (Map): https://d2khazk8e83rdv.cloudfront.net/moe_mapping/downloads/2Water/Wells_pdfs/692\6922155.pdf

Additional Detail(s) (Map)

Well Completed Date: 09/25/1992
Year Completed: 1992
Depth (m): 74.0664
Latitude: 44.2907971449411
Longitude: -79.4217644527054
X: -79.42176430073707
Y: 44.29079714360263
Path: 692\6922155.pdf

Bore Hole Information

Bore Hole ID: 10512461 **Elevation:**

DP2BR:		***Elevrc:***	
Spatial Status:		***Zone:***	17
Code OB:		***East83:***	625914.40
Code OB Desc:		***North83:***	4905383.00
Open Hole:		***Org CS:***	
Cluster Kind:		***UTMRC:***	5
Date Completed:	09/25/1992	***UTMRC Desc:***	margin of error : 100 m - 300 m
Remarks:		***Location Method:***	wwr
Location Method Desc:	on Water Well Record		
Elevrc Desc:			
Location Source Date:			
Improvement Location Source:			
Improvement Location Method:			
Source Revision Comment:			
Supplier Comment:			

Overburden and Bedrock Materials Interval

Formation ID:	932812779
Layer:	6
Color:	2
General Color:	GREY
Material 1:	05
Material 1 Desc:	CLAY
Material 2:	17
Material 2 Desc:	SHALE
Material 3:	74
Material 3 Desc:	LAYERED
Formation Top Depth:	220.0
Formation End Depth:	226.0
Formation End Depth UOM:	ft

Overburden and Bedrock Materials Interval

Formation ID:	932812776
Layer:	3
Color:	6
General Color:	BROWN
Material 1:	05
Material 1 Desc:	CLAY
Material 2:	11
Material 2 Desc:	GRAVEL
Material 3:	77
Material 3 Desc:	LOOSE
Formation Top Depth:	16.0
Formation End Depth:	20.0
Formation End Depth UOM:	ft

Overburden and Bedrock Materials Interval

Formation ID:	932812775
Layer:	2
Color:	6
General Color:	BROWN
Material 1:	05
Material 1 Desc:	CLAY
Material 2:	85
Material 2 Desc:	SOFT
Material 3:	
Material 3 Desc:	

Formation Top Depth:	2.0
Formation End Depth:	16.0
Formation End Depth UOM:	ft

Overburden and Bedrock Materials Interval

Formation ID:	932812778
Layer:	5
Color:	2
General Color:	GREY
Material 1:	05
Material 1 Desc:	CLAY
Material 2:	13
Material 2 Desc:	BOULDERS
Material 3:	73
Material 3 Desc:	HARD
Formation Top Depth:	150.0
Formation End Depth:	220.0
Formation End Depth UOM:	ft

Overburden and Bedrock Materials Interval

Formation ID:	932812777
Layer:	4
Color:	3
General Color:	BLUE
Material 1:	05
Material 1 Desc:	CLAY
Material 2:	12
Material 2 Desc:	STONES
Material 3:	66
Material 3 Desc:	DENSE
Formation Top Depth:	20.0
Formation End Depth:	150.0
Formation End Depth UOM:	ft

Overburden and Bedrock Materials Interval

Formation ID:	932812774
Layer:	1
Color:	6
General Color:	BROWN
Material 1:	02
Material 1 Desc:	TOPSOIL
Material 2:	85
Material 2 Desc:	SOFT
Material 3:	
Material 3 Desc:	
Formation Top Depth:	0.0
Formation End Depth:	2.0
Formation End Depth UOM:	ft

Overburden and Bedrock Materials Interval

Formation ID:	932812780
Layer:	7
Color:	2
General Color:	GREY

Material 1:	15
Material 1 Desc:	LIMESTONE
Material 2:	85
Material 2 Desc:	SOFT
Material 3:	
Material 3 Desc:	
Formation Top Depth:	226.0
Formation End Depth:	243.0
Formation End Depth UOM:	ft

Method of Construction & Well Use

Method Construction ID:	966922155
Method Construction Code:	2
Method Construction:	Rotary (Convent.)
Other Method Construction:	

Pipe Information

Pipe ID:	11061031
Casing No:	1
Comment:	
Alt Name:	

Construction Record - Casing

Casing ID:	930826660
Layer:	1
Material:	1
Open Hole or Material:	STEEL
Depth From:	
Depth To:	226.0
Casing Diameter:	5.0
Casing Diameter UOM:	inch
Casing Depth UOM:	ft

Results of Well Yield Testing

Pumping Test Method Desc:	BAILER
Pump Test ID:	996922155
Pump Set At:	
Static Level:	60.0
Final Level After Pumping:	135.0
Recommended Pump Depth:	150.0
Pumping Rate:	10.0
Flowing Rate:	
Recommended Pump Rate:	8.0
Levels UOM:	ft
Rate UOM:	GPM
Water State After Test Code:	1
Water State After Test:	CLEAR
Pumping Test Method:	2
Pumping Duration HR:	3
Pumping Duration MIN:	0
Flowing:	No

Draw Down & Recovery

Pump Test Detail ID:	935148340
Test Type:	Draw Down
Test Duration:	60

Test Level:	133.0
Test Level UOM:	ft

Draw Down & Recovery

Pump Test Detail ID:	934359022
Test Type:	Draw Down
Test Duration:	15
Test Level:	89.0
Test Level UOM:	ft

Draw Down & Recovery

Pump Test Detail ID:	934633505
Test Type:	Draw Down
Test Duration:	30
Test Level:	102.0
Test Level UOM:	ft

Draw Down & Recovery

Pump Test Detail ID:	934883118
Test Type:	Draw Down
Test Duration:	45
Test Level:	121.0
Test Level UOM:	ft

Water Details

Water ID:	934004933
Layer:	1
Kind Code:	1
Kind:	FRESH
Water Found Depth:	226.0
Water Found Depth UOM:	ft

9	1 of 1	NE/53.3	253.9 / -1.00	lot 22 con 5 ON	WWIS

Well ID:	6924628	**Flowing (Y/N):**	
Construction Date:		**Flow Rate:**	
Use 1st:	Commerical	**Data Entry Status:**	
Use 2nd:		**Data Src:**	1
Final Well Status:	Water Supply	**Date Received:**	10/26/1998
Water Type:		**Selected Flag:**	TRUE
Casing Material:		**Abandonment Rec:**	
Audit No:	188863	**Contractor:**	1413
Tag:		**Form Version:**	1
Constructn Method:		**Owner:**	
Elevation (m):		**County:**	YORK
Elevatn Reliabilty:		**Lot:**	022
Depth to Bedrock:		**Concession:**	05
Well Depth:		**Concession Name:**	CON
Overburden/Bedrock:		**Easting NAD83:**	
Pump Rate:		**Northing NAD83:**	
Static Water Level:		**Zone:**	
Clear/Cloudy:		**UTM Reliability:**	
Municipality:	GEORGINA TOWNSHIP (NORTH GWILLIMBURY)		
Site Info:			

PDF URL (Map): https://d2khazk8e83rdv.cloudfront.net/moe_mapping/downloads/2Water/Wells_pdfs/692\6924628.pdf

Additional Detail(s) (Map)

Well Completed Date:	09/24/1998
Year Completed:	1998
Depth (m):	79.5528
Latitude:	44.2906602436911
Longitude:	-79.4183763973005
X:	-79.41837624465721
Y:	44.29066024211936
Path:	692\6924628.pdf

Bore Hole Information

Bore Hole ID:	10514906	***Elevation:***	
DP2BR:		***Elevrc:***	
Spatial Status:		***Zone:***	17
Code OB:		***East83:***	626185.00
Code OB Desc:		***North83:***	4905373.00
Open Hole:		***Org CS:***	
Cluster Kind:		***UTMRC:***	2
Date Completed:	09/24/1998	***UTMRC Desc:***	margin of error : 3 - 10 m
Remarks:		***Location Method:***	gps
Location Method Desc:	from gps		
Elevrc Desc:			
Location Source Date:			
Improvement Location Source:			
Improvement Location Method:			
Source Revision Comment:			
Supplier Comment:			

Overburden and Bedrock Materials Interval

Formation ID:	932824493
Layer:	3
Color:	2
General Color:	GREY
Material 1:	28
Material 1 Desc:	SAND
Material 2:	05
Material 2 Desc:	CLAY
Material 3:	11
Material 3 Desc:	GRAVEL
Formation Top Depth:	18.0
Formation End Depth:	76.0
Formation End Depth UOM:	ft

Overburden and Bedrock Materials Interval

Formation ID:	932824495
Layer:	5
Color:	2
General Color:	GREY
Material 1:	17
Material 1 Desc:	SHALE
Material 2:	85
Material 2 Desc:	SOFT
Material 3:	
Material 3 Desc:	
Formation Top Depth:	228.0
Formation End Depth:	256.0

Formation End Depth UOM: ft

Overburden and Bedrock Materials Interval

Formation ID: 932824496
Layer: 6
Color: 2
General Color: GREY
Material 1: 15
Material 1 Desc: LIMESTONE
Material 2: 26
Material 2 Desc: ROCK
Material 3:
Material 3 Desc:
Formation Top Depth: 256.0
Formation End Depth: 261.0
Formation End Depth UOM: ft

Overburden and Bedrock Materials Interval

Formation ID: 932824494
Layer: 4
Color: 2
General Color: GREY
Material 1: 05
Material 1 Desc: CLAY
Material 2: 66
Material 2 Desc: DENSE
Material 3:
Material 3 Desc:
Formation Top Depth: 76.0
Formation End Depth: 228.0
Formation End Depth UOM: ft

Overburden and Bedrock Materials Interval

Formation ID: 932824491
Layer: 1
Color: 6
General Color: BROWN
Material 1: 02
Material 1 Desc: TOPSOIL
Material 2: 85
Material 2 Desc: SOFT
Material 3:
Material 3 Desc:
Formation Top Depth: 0.0
Formation End Depth: 1.0
Formation End Depth UOM: ft

Overburden and Bedrock Materials Interval

Formation ID: 932824492
Layer: 2
Color: 6
General Color: BROWN
Material 1: 05
Material 1 Desc: CLAY

Material 2:	12
Material 2 Desc:	STONES
Material 3:	85
Material 3 Desc:	SOFT
Formation Top Depth:	1.0
Formation End Depth:	18.0
Formation End Depth UOM:	ft

Method of Construction & Well Use

Method Construction ID:	966924628
Method Construction Code:	2
Method Construction:	Rotary (Convent.)
Other Method Construction:	

Pipe Information

Pipe ID:	11063476
Casing No:	1
Comment:	
Alt Name:	

Construction Record - Casing

Casing ID:	930829248
Layer:	1
Material:	1
Open Hole or Material:	STEEL
Depth From:	
Depth To:	233.0
Casing Diameter:	6.0
Casing Diameter UOM:	inch
Casing Depth UOM:	ft

Construction Record - Casing

Casing ID:	930829249
Layer:	2
Material:	3
Open Hole or Material:	CONCRETE
Depth From:	
Depth To:	261.0
Casing Diameter:	6.0
Casing Diameter UOM:	inch
Casing Depth UOM:	ft

Results of Well Yield Testing

Pumping Test Method Desc:	PUMP
Pump Test ID:	996924628
Pump Set At:	
Static Level:	75.0
Final Level After Pumping:	226.0
Recommended Pump Depth:	220.0
Pumping Rate:	10.0
Flowing Rate:	
Recommended Pump Rate:	10.0
Levels UOM:	ft
Rate UOM:	GPM
Water State After Test Code:	1
Water State After Test:	CLEAR

Pumping Test Method: 1
Pumping Duration HR: 1
Pumping Duration MIN: 0
Flowing: No

Draw Down & Recovery

Pump Test Detail ID: 935151451
Test Type: Draw Down
Test Duration: 60
Test Level: 226.0
Test Level UOM: ft

Water Details

Water ID: 934006889
Layer: 2
Kind Code: 1
Kind: FRESH
Water Found Depth: 257.0
Water Found Depth UOM: ft

Water Details

Water ID: 934006888
Layer: 1
Kind Code: 1
Kind: FRESH
Water Found Depth: 228.0
Water Found Depth UOM: ft

10	1 of 6	NE/57.4	253.9 / -0.92	YORK REGIONAL POLICE FORCE ATTN: DETECTIVE SARGEN CON 5 CORNER OF BASELINE SUTTON ON	PRT

Location ID: 14510
Type: private
Expiry Date:
Capacity (L): 18184.00
Licence #: 0001039765

10	2 of 6	NE/57.4	253.9 / -0.92	YORK REGIONAL POLICE FORCE ATTN: DETECTIVE SARGENT NOBLE CON 5 CORNER OF BASELINE SUTTON ON	DTNK

Delisted Expired Fuel Safety Facilities

Instance No: 9348694
Status: EXPIRED
Instance ID: 385343
Instance Type: FS Facility
Instance Creation Dt:
Instance Install Dt:
Item Description:
Manufacturer:
Model:

Expired Date:
Max Hazard Rank:
Facility Location:
Facility Type:
Fuel Type 2:
Fuel Type 3:
Panam Related:
Panam Venue Nm:
External Identifier:

Serial No:		***Item:***	
ULC Standard:		***Piping Steel:***	
Quantity:		***Piping Galvanized:***	
Unit of Measure:		***Tank Single Wall St:***	
Overfill Prot Type:		***Piping Underground:***	
Creation Date:		***Tank Underground:***	
Next Periodic Str DT:		***Source:***	
TSSA Base Sched Cycle 2:			
TSSAMax Hazard Rank 1:			
TSSA Risk Based Periodic Yn:			
TSSA Volume of Directives:			
TSSA Periodic Exempt:			
TSSA Statutory Interval:			
TSSA Recd Insp Interva:			
TSSA Recd Tolerance:			
TSSA Program Area:			
TSSA Program Area 2:			
Description:	Fuels Safety Private Fuel Outlet - Self Serve		
Original Source:	EXP		
Record Date:	Up to Mar 2012		

10	*3 of 6*	*NE/57.4*	*253.9 / -0.92*	***YORK REGIONAL POLICE FORCE ATTN: DETECTIVE SARGENT NOBLE CON 5 CORNER OF BASELINE SUTTON ON***	***DTNK***

Delisted Expired Fuel Safety Facilities

Instance No:	10992307	***Expired Date:***	
Status:	EXPIRED	***Max Hazard Rank:***	
Instance ID:	60871	***Facility Location:***	
Instance Type:	FS Piping	***Facility Type:***	
Instance Creation Dt:		***Fuel Type 2:***	
Instance Install Dt:		***Fuel Type 3:***	
Item Description:		***Panam Related:***	
Manufacturer:		***Panam Venue Nm:***	
Model:		***External Identifier:***	
Serial No:		***Item:***	
ULC Standard:		***Piping Steel:***	
Quantity:		***Piping Galvanized:***	
Unit of Measure:		***Tank Single Wall St:***	
Overfill Prot Type:		***Piping Underground:***	
Creation Date:		***Tank Underground:***	
Next Periodic Str DT:		***Source:***	
TSSA Base Sched Cycle 2:			
TSSAMax Hazard Rank 1:			
TSSA Risk Based Periodic Yn:			
TSSA Volume of Directives:			
TSSA Periodic Exempt:			
TSSA Statutory Interval:			
TSSA Recd Insp Interva:			
TSSA Recd Tolerance:			
TSSA Program Area:			
TSSA Program Area 2:			
Description:	FS Piping		
Original Source:	EXP		
Record Date:	Up to Mar 2012		

10	*4 of 6*	*NE/57.4*	*253.9 / -0.92*	***York Regional Police 3527 Baseline Road Sutton ON L0E 1R0***	***GEN***

Generator No: ON3104093
SIC Code:
SIC Description:
Approval Years: As of Oct 2022
PO Box No:
Country: Canada
Status: Registered
Co Admin:
Choice of Contact:
Phone No Admin:
Contaminated Facility:
MHSW Facility:

Detail(s)

Waste Class: 252 L
Waste Class Name: WASTE OILS & LUBRICANTS

Waste Class: 212 I
Waste Class Name: ALIPHATIC SOLVENTS

10	5 of 6	NE/57.4	253.9 / -0.92	3527 Baseline Rd. Keswick, ON GEORGINA ON	SPL

Ref No: 1-2GBGGJ
Year:
Incident Dt: 1/15/2023 2:00:13 AM
Dt MOE Arvl on Scn:
MOE Reported Dt: 1/15/2023 3:05:13 AM
Dt Document Closed: 1/20/2023 11:28:21 AM
Site No:
MOE Response: Priority Response
Site County/District:
Site Geo Ref Meth:
Site District Office: York Durham District Office
Nearest Watercourse:
Site Name:
Site Address: 3527 Baseline Rd. Keswick, ON
Site Region: REGIONAL MUNICIPALITY OF YORK
Site Municipality: GEORGINA
Site Lot:
Site Conc:
Site Geo Ref Accu:
Site Map Datum:
Northing:
Easting:
Incident Cause:
Incident Preceding Spill: Overflow/Surcharge
Environment Impact: 1 Minor Impact
Health Env Consequence:
Nature of Impact:
Contaminant Qty: 2000 litre (L)
Contaminant Qty 1:
Contaminant Unit:
Client Type:
Source Type: Tank - Above Ground
Contaminant Code:
Contaminant Name: DIESEL FUEL
Contaminant Limit 1:
Contam Limit Freq 1:
Contaminant UN No 1:
Receiving Medium: Land
Incident Reason: Unknown

Municipality No:
Nature of Damage:
Discharger Report:
Material Group:
Impact to Health: 0 No Impact
Agency Involved:

Incident Summary: EFI Global - 2000 L diesel fuel to asphalt yard
Activity Preceding Spill:
Property 2nd Watershed: 02E | Eastern Georgian Bay
Property Tertiary Watershed: 02EC | Severn River - Lake Simcoe
Sector Type: CONSTRUCTION, TRANSPORTATION, MINING, AND FORESTRY MACHINERY AND EQUIPMENT RENTAL AND LEASING
SAC Action Class:
Call Report Locatn Geodata: {"integration_ids":["PR00003744129"],"wkts":["POINT (-79.4191557000 44.2908755000)"],"creation_date":"2023-01-15"}
Time Reported:
System Facility Address:
Client Name:

10	6 of 6	NE/57.4	253.9 / -0.92	YORK REGIONAL POLICE FORCE ATTN: DETECTIVE SARGENT NOBLE CON 5 CORNER OF BASELINE SUTTON ON	EXP

Inventory No: 10992293
Inventory Status: EXPIRED
Installation Year: 1990
Capacity: 18000
Capacity Unit:
Tank Type:
Manufacturer:
Model:
Description: UNDERGROUND TANK
Previous Fuel Type: Gasoline

Tank Material: Fiberglass (FRP)
Corrosion Protect: Fiberglass
Overfill Protection:
Inventory Context: FS Liquid Fuel Tank
Inventory Item: FS LIQUID FUEL TANK

11	1 of 13	NE/57.4	253.9 / -0.92	York Regional Police 3527 Base Line Road Georgina ON	GEN

Generator No: ON5624125
SIC Code: 913130
SIC Description: Municipal Police Services
Approval Years: 06,07,08
PO Box No:
Country:
Status:
Co Admin:
Choice of Contact:
Phone No Admin:
Contaminated Facility:
MHSW Facility:

Detail(s)

Waste Class: 212
Waste Class Name: ALIPHATIC SOLVENTS

11	2 of 13	NE/57.4	253.9 / -0.92	York Regional Police 3527 Base Line Road Georgina ON	GEN

Generator No: ON5624125
SIC Code: 913130
SIC Description: Municipal Police Services
Approval Years: 2009
PO Box No:
Country:

Map Key	Number of Records	Direction/ Distance (m)	Elev/Diff (m)	Site	DB

Status:
Co Admin:
Choice of Contact:
Phone No Admin:
Contaminated Facility:
MHSW Facility:

Detail(s)

Waste Class: 212
Waste Class Name: ALIPHATIC SOLVENTS

Map Key	Number of Records	Direction/ Distance (m)	Elev/Diff (m)	Site	DB
11	3 of 13	NE/57.4	253.9 / -0.92	York Regional Police 3527 Base Line Road Georgina ON	GEN

Generator No: ON5624125
SIC Code: 913130
SIC Description: Municipal Police Services
Approval Years: 2010
PO Box No:
Country:
Status:
Co Admin:
Choice of Contact:
Phone No Admin:
Contaminated Facility:
MHSW Facility:

Detail(s)

Waste Class: 212
Waste Class Name: ALIPHATIC SOLVENTS

Map Key	Number of Records	Direction/ Distance (m)	Elev/Diff (m)	Site	DB
11	4 of 13	NE/57.4	253.9 / -0.92	York Regional Police 3527 Baseline Road Sutton ON	GEN

Generator No: ON3104093
SIC Code: 913130
SIC Description:
Approval Years: 2013
PO Box No:
Country:
Status:
Co Admin:
Choice of Contact:
Phone No Admin:
Contaminated Facility:
MHSW Facility:

Detail(s)

Waste Class: 212
Waste Class Name: ALIPHATIC SOLVENTS

Map Key	Number of Records	Direction/ Distance (m)	Elev/Diff (m)	Site	DB
11	5 of 13	NE/57.4	253.9 / -0.92	SOUTH SIMCOE CONTRACTING AND EXCAVATING 3527 BASELINE RD,,SUTTON WEST,ON,L0E 1R0,CA ON	PINC

Map Key	Number of Records	Direction/ Distance (m)	Elev/Diff (m)	Site	DB

Incident Id:			***Pipe Material:***
Incident No:	1759380		***Fuel Category:***
Incident Reported Dt:	11/23/2015		***Health Impact:***
Type:	FS-Pipeline Incident		***Environment Impact:***
Status Code:			***Property Damage:***
Tank Status:	Pipeline Damage Reason Est		***Service Interrupt:***
Task No:			***Enforce Policy:***
Spills Action Centre:			***Public Relation:***
Fuel Type:			***Pipeline System:***
Fuel Occurrence Tp:			***PSIG:***
Date of Occurrence:			***Attribute Category:***
Occurrence Start Dt:			***Regulator Location:***
Depth:			***Method Details:***
Customer Acct Name:		SOUTH SIMCOE CONTRACTING AND EXCAVATING	
Incident Address:		3527 BASELINE RD,,SUTTON WEST,ON,L0E 1R0,CA	
Operation Type:			
Pipeline Type:			
Regulator Type:			
Summary:			
Reported By:			
Affiliation:			
Occurrence Desc:			
Damage Reason:			
Notes:			

Map Key	Number of Records	Direction/ Distance (m)	Elev/Diff (m)	Site	DB
11	6 of 13	NE/57.4	253.9 / -0.92	***Enbridge Gas Distribution Inc.*** ***3527 Baseline Road*** ***Georgina ON***	***SPL***

Ref No:	7164-A4JKGW		***Municipality No:***
Year:			***Nature of Damage:***
Incident Dt:	11/20/2015		***Discharger Report:***
Dt MOE Arvl on Scn:			***Material Group:***
MOE Reported Dt:	11/23/2015		***Impact to Health:***
Dt Document Closed:			***Agency Involved:***
Site No:		NA	
MOE Response:		No	
Site County/District:			
Site Geo Ref Meth:			
Site District Office:			
Nearest Watercourse:			
Site Name:		Commercial Building<UNOFFICIAL>	
Site Address:		3527 Baseline Road	
Site Region:			
Site Municipality:		Georgina	
Site Lot:			
Site Conc:			
Site Geo Ref Accu:			
Site Map Datum:			
Northing:			
Easting:			
Incident Cause:			
Incident Preceding Spill:			
Environment Impact:			
Health Env Consequence:			
Nature of Impact:			
Contaminant Qty:		0 other - see incident description	
Contaminant Qty 1:		0	
Contaminant Unit:		other - see incident description	
Client Type:			
Source Type:			
Contaminant Code:		35	
Contaminant Name:		NATURAL GAS (METHANE)	

Contaminant Limit 1:	
Contam Limit Freq 1:	
Contaminant UN No 1:	
Receiving Medium:	
Incident Reason:	Operator/Human Error
Incident Summary:	TSSA- 1" steel service Line Strike, Made Safe, Georgina
Activity Preceding Spill:	
Property 2nd Watershed:	
Property Tertiary Watershed:	
Sector Type:	Miscellaneous Industrial
SAC Action Class:	TSSA - Fuel Safety Branch - Hydrocarbon Fuel Release/Spill
Call Report Locatn Geodata:	
Time Reported:	
System Facility Address:	
Client Name:	Enbridge Gas Distribution Inc.

11	***7 of 13***	***NE/57.4***	***253.9 / -0.92***	***York Regional Police*** ***3527 Baseline Road*** ***Sutton ON L0E 1R0***	***GEN***

Generator No:	ON3104093
SIC Code:	913130
SIC Description:	913130
Approval Years:	2015
PO Box No:	
Country:	Canada
Status:	
Co Admin:	
Choice of Contact:	CO_OFFICIAL
Phone No Admin:	
Contaminated Facility:	No
MHSW Facility:	No

Detail(s)

Waste Class:	212
Waste Class Name:	ALIPHATIC SOLVENTS

11	***8 of 13***	***NE/57.4***	***253.9 / -0.92***	***York Regional Police*** ***3527 Baseline Road*** ***Sutton ON L0E 1R0***	***GEN***

Generator No:	ON3104093
SIC Code:	913130
SIC Description:	913130
Approval Years:	2016
PO Box No:	
Country:	Canada
Status:	
Co Admin:	
Choice of Contact:	CO_OFFICIAL
Phone No Admin:	
Contaminated Facility:	No
MHSW Facility:	No

Detail(s)

Waste Class:	212
Waste Class Name:	ALIPHATIC SOLVENTS

Map Key	Number of Records	Direction/ Distance (m)	Elev/Diff (m)	Site	DB
11	9 of 13	NE/57.4	253.9 / -0.92	York Regional Police 3527 Baseline Road Sutton ON L0E 1R0	GEN

Generator No: ON3104093
SIC Code: 913130
SIC Description: 913130
Approval Years: 2014
PO Box No:
Country: Canada
Status:
Co Admin:
Choice of Contact: CO_OFFICIAL
Phone No Admin:
Contaminated Facility: No
MHSW Facility: No

Detail(s)

Waste Class: 212
Waste Class Name: ALIPHATIC SOLVENTS

Map Key	Number of Records	Direction/ Distance (m)	Elev/Diff (m)	Site	DB
11	10 of 13	NE/57.4	253.9 / -0.92	York Regional Police 3527 Baseline Road Sutton ON L0E 1R0	GEN

Generator No: ON3104093
SIC Code:
SIC Description:
Approval Years: As of Dec 2018
PO Box No:
Country: Canada
Status: Registered
Co Admin:
Choice of Contact:
Phone No Admin:
Contaminated Facility:
MHSW Facility:

Detail(s)

Waste Class: 212 I
Waste Class Name: Aliphatic solvents and residues

Map Key	Number of Records	Direction/ Distance (m)	Elev/Diff (m)	Site	DB
11	11 of 13	NE/57.4	253.9 / -0.92	York Regional Police 3527 Baseline Road, Sutton Georgina ON	SPL

Ref No: 6430-ATRKVA
Year:
Incident Dt: 2017/12/05
Dt MOE Arvl on Scn:
MOE Reported Dt: 2017/12/05
Dt Document Closed: 2017/12/20
Site No: NA
MOE Response: No
Site County/District: Regional Municipality of York
Site Geo Ref Meth:
Site District Office: York-Durham
Nearest Watercourse:
Site Name: York Regional Police Building<UNOFFICIAL>
Site Address: 3527 Baseline Road, Sutton
Site Region: Central

Municipality No:
Nature of Damage:
Discharger Report:
Material Group:
Impact to Health: 2 - Minor Environment
Agency Involved:

Site Municipality:	Georgina
Site Lot:	
Site Conc:	
Site Geo Ref Accu:	
Site Map Datum:	
Northing:	4905314.2
Easting:	626203.03
Incident Cause:	
Incident Preceding Spill:	Leak/Break
Environment Impact:	
Health Env Consequence:	
Nature of Impact:	
Contaminant Qty:	65 L
Contaminant Qty 1:	65
Contaminant Unit:	L
Client Type:	Municipal Government
Source Type:	Container/Drum/Tote
Contaminant Code:	24
Contaminant Name:	ALCOHOLS (N.O.S.)
Contaminant Limit 1:	
Contam Limit Freq 1:	
Contaminant UN No 1:	1987
Receiving Medium:	Land
Incident Reason:	Equipment Failure
Incident Summary:	York Regional Police: 65 L alcohol to pave, clnd
Activity Preceding Spill:	
Property 2nd Watershed:	
Property Tertiary Watershed:	
Sector Type:	Miscellaneous Communal
SAC Action Class:	Land Spills
Call Report Locatn Geodata:	
Time Reported:	
System Facility Address:	
Client Name:	York Regional Police

11	***12 of 13***	***NE/57.4***	***253.9 / -0.92***	***York Regional Police*** ***3527 Baseline Road*** ***Sutton ON L0E 1R0***	***GEN***

Generator No:	ON3104093
SIC Code:	
SIC Description:	
Approval Years:	As of Jul 2020
PO Box No:	
Country:	Canada
Status:	Registered
Co Admin:	
Choice of Contact:	
Phone No Admin:	
Contaminated Facility:	
MHSW Facility:	

Detail(s)

Waste Class:	212 I
Waste Class Name:	Aliphatic solvents and residues

11	***13 of 13***	***NE/57.4***	***253.9 / -0.92***	***York Regional Police*** ***3527 Baseline Road*** ***Sutton ON L0E 1R0***	***GEN***

Generator No:	ON3104093

SIC Code:
SIC Description:
Approval Years: As of Nov 2021
PO Box No:
Country: Canada
Status: Registered
Co Admin:
Choice of Contact:
Phone No Admin:
Contaminated Facility:
MHSW Facility:

Detail(s)

Waste Class: 212 I
Waste Class Name: Aliphatic solvents and residues

12	1 of 1	WSW/65.9	254.9 / 0.00	DC MARINE SERVICES 3449 BASELINE KESWICK ON L4P3E9	RST

Headcode: 00824400
Headcode Desc: MARINAS
Phone:
List Name:
Description:

13	1 of 1	NNW/72.2	250.9 / -3.97	lot 9 con 9 ON	WWIS

Well ID:	6913322	**Flowing (Y/N):**	
Construction Date:		**Flow Rate:**	
Use 1st:	Livestock	**Data Entry Status:**	
Use 2nd:	Domestic	**Data Src:**	1
Final Well Status:	Water Supply	**Date Received:**	06/07/1976
Water Type:		**Selected Flag:**	TRUE
Casing Material:		**Abandonment Rec:**	
Audit No:		**Contractor:**	1413
Tag:		**Form Version:**	1
Constructn Method:		**Owner:**	
Elevation (m):		**County:**	YORK
Elevatn Reliabilty:		**Lot:**	009
Depth to Bedrock:		**Concession:**	09
Well Depth:		**Concession Name:**	CON
Overburden/Bedrock:		**Easting NAD83:**	
Pump Rate:		**Northing NAD83:**	
Static Water Level:		**Zone:**	
Clear/Cloudy:		**UTM Reliability:**	

Municipality: GEORGINA TOWNSHIP (NORTH GWILLIMBURY)
Site Info:

PDF URL (Map): https://d2khazk8e83rdv.cloudfront.net/moe_mapping/downloads/2Water/Wells_pdfs/691\6913322.pdf

Additional Detail(s) (Map)

Well Completed Date: 05/13/1976
Year Completed: 1976
Depth (m): 27.432
Latitude: 44.291148470657
Longitude: -79.4211283326799
X: -79.42112818050015
Y: 44.291148469062335

Path: 691\6913322.pdf

Bore Hole Information

Bore Hole ID:	10503911	**Elevation:**	
DP2BR:		**Elevrc:**	
Spatial Status:		**Zone:**	17
Code OB:		**East83:**	625964.40
Code OB Desc:		**North83:**	4905423.00
Open Hole:		**Org CS:**	
Cluster Kind:		**UTMRC:**	5
Date Completed:	05/13/1976	**UTMRC Desc:**	margin of error : 100 m - 300 m
Remarks:		**Location Method:**	p5

Location Method Desc: Original Pre1985 UTM Rel Code 5: margin of error : 100 m - 300 m
Elevrc Desc:
Location Source Date:
Improvement Location Source:
Improvement Location Method:
Source Revision Comment:
Supplier Comment:

Overburden and Bedrock Materials Interval

Formation ID: 932764629
Layer: 2
Color: 6
General Color: BROWN
Material 1: 28
Material 1 Desc: SAND
Material 2: 05
Material 2 Desc: CLAY
Material 3: 66
Material 3 Desc: DENSE
Formation Top Depth: 1.0
Formation End Depth: 3.0
Formation End Depth UOM: ft

Overburden and Bedrock Materials Interval

Formation ID: 932764633
Layer: 6
Color: 6
General Color: BROWN
Material 1: 28
Material 1 Desc: SAND
Material 2: 11
Material 2 Desc: GRAVEL
Material 3: 80
Material 3 Desc: POROUS
Formation Top Depth: 86.0
Formation End Depth: 89.0
Formation End Depth UOM: ft

Overburden and Bedrock Materials Interval

Formation ID: 932764628
Layer: 1
Color: 8
General Color: BLACK

Material 1:	02
Material 1 Desc:	TOPSOIL
Material 2:	85
Material 2 Desc:	SOFT
Material 3:	
Material 3 Desc:	
Formation Top Depth:	0.0
Formation End Depth:	1.0
Formation End Depth UOM:	ft

Overburden and Bedrock Materials Interval

Formation ID:	932764632
Layer:	5
Color:	3
General Color:	BLUE
Material 1:	05
Material 1 Desc:	CLAY
Material 2:	66
Material 2 Desc:	DENSE
Material 3:	
Material 3 Desc:	
Formation Top Depth:	62.0
Formation End Depth:	86.0
Formation End Depth UOM:	ft

Overburden and Bedrock Materials Interval

Formation ID:	932764634
Layer:	7
Color:	6
General Color:	BROWN
Material 1:	05
Material 1 Desc:	CLAY
Material 2:	12
Material 2 Desc:	STONES
Material 3:	60
Material 3 Desc:	CEMENTED
Formation Top Depth:	89.0
Formation End Depth:	90.0
Formation End Depth UOM:	ft

Overburden and Bedrock Materials Interval

Formation ID:	932764631
Layer:	4
Color:	2
General Color:	GREY
Material 1:	05
Material 1 Desc:	CLAY
Material 2:	12
Material 2 Desc:	STONES
Material 3:	73
Material 3 Desc:	HARD
Formation Top Depth:	16.0
Formation End Depth:	62.0
Formation End Depth UOM:	ft

Overburden and Bedrock

Materials Interval

Formation ID:	932764630
Layer:	3
Color:	6
General Color:	BROWN
Material 1:	05
Material 1 Desc:	CLAY
Material 2:	66
Material 2 Desc:	DENSE
Material 3:	
Material 3 Desc:	
Formation Top Depth:	3.0
Formation End Depth:	16.0
Formation End Depth UOM:	ft

Method of Construction & Well Use

Method Construction ID:	966913322
Method Construction Code:	2
Method Construction:	Rotary (Convent.)
Other Method Construction:	

Pipe Information

Pipe ID:	11052481
Casing No:	1
Comment:	
Alt Name:	

Construction Record - Casing

Casing ID:	930816919
Layer:	1
Material:	1
Open Hole or Material:	STEEL
Depth From:	
Depth To:	87.0
Casing Diameter:	6.0
Casing Diameter UOM:	inch
Casing Depth UOM:	ft

Construction Record - Screen

Screen ID:	933392494
Layer:	1
Slot:	020
Screen Top Depth:	86.0
Screen End Depth:	90.0
Screen Material:	
Screen Depth UOM:	ft
Screen Diameter UOM:	inch
Screen Diameter:	5.0

Results of Well Yield Testing

Pumping Test Method Desc:	PUMP
Pump Test ID:	996913322
Pump Set At:	
Static Level:	10.0
Final Level After Pumping:	21.0

Recommended Pump Depth:	40.0
Pumping Rate:	5.0
Flowing Rate:	
Recommended Pump Rate:	4.0
Levels UOM:	ft
Rate UOM:	GPM
Water State After Test Code:	1
Water State After Test:	CLEAR
Pumping Test Method:	1
Pumping Duration HR:	4
Pumping Duration MIN:	0
Flowing:	No

Draw Down & Recovery

Pump Test Detail ID:	934363728
Test Type:	Draw Down
Test Duration:	15
Test Level:	18.0
Test Level UOM:	ft

Draw Down & Recovery

Pump Test Detail ID:	934624330
Test Type:	Draw Down
Test Duration:	30
Test Level:	21.0
Test Level UOM:	ft

Draw Down & Recovery

Pump Test Detail ID:	935146637
Test Type:	Draw Down
Test Duration:	60
Test Level:	21.0
Test Level UOM:	ft

Water Details

Water ID:	933996495
Layer:	1
Kind Code:	1
Kind:	FRESH
Water Found Depth:	89.0
Water Found Depth UOM:	ft

14	1 of 1	WNW/201.9	248.8 / -6.05	lot 8 con 9 ON	WWIS

Well ID:	6904898	***Flowing (Y/N):***	
Construction Date:		***Flow Rate:***	
Use 1st:	Domestic	***Data Entry Status:***	
Use 2nd:	0	***Data Src:***	1
Final Well Status:	Water Supply	***Date Received:***	10/26/1959
Water Type:		***Selected Flag:***	TRUE
Casing Material:		***Abandonment Rec:***	
Audit No:		***Contractor:***	4102
Tag:		***Form Version:***	1
Constructn Method:		***Owner:***	
Elevation (m):		***County:***	YORK
Elevatn Reliabilty:		***Lot:***	008
Depth to Bedrock:		***Concession:***	09

Well Depth:		***Concession Name:***	CON
Overburden/Bedrock:		***Easting NAD83:***	
Pump Rate:		***Northing NAD83:***	
Static Water Level:		***Zone:***	
Clear/Cloudy:		***UTM Reliability:***	
Municipality:	GEORGINA TOWNSHIP (NORTH GWILLIMBURY)		
Site Info:			

PDF URL (Map): https://d2khazk8e83rdv.cloudfront.net/moe_mapping/downloads/2Water/Wells_pdfs/690\6904898.pdf

Additional Detail(s) (Map)

Well Completed Date:	08/10/1959
Year Completed:	1959
Depth (m):	10.9728
Latitude:	44.2903222353021
Longitude:	-79.4238828872183
X:	-79.42388273415324
Y:	44.29032223355886
Path:	690\6904898.pdf

Bore Hole Information

Bore Hole ID:	10495616	***Elevation:***	
DP2BR:		***Elevrc:***	
Spatial Status:		***Zone:***	17
Code OB:		***East83:***	625746.40
Code OB Desc:		***North83:***	4905327.00
Open Hole:		***Org CS:***	
Cluster Kind:		***UTMRC:***	5
Date Completed:	08/10/1959	***UTMRC Desc:***	margin of error : 100 m - 300 m
Remarks:		***Location Method:***	p5
Location Method Desc:	Original Pre1985 UTM Rel Code 5: margin of error : 100 m - 300 m		
Elevrc Desc:			
Location Source Date:			
Improvement Location Source:			
Improvement Location Method:			
Source Revision Comment:			
Supplier Comment:			

Overburden and Bedrock Materials Interval

Formation ID:	932725728
Layer:	2
Color:	
General Color:	
Material 1:	12
Material 1 Desc:	STONES
Material 2:	
Material 2 Desc:	
Material 3:	
Material 3 Desc:	
Formation Top Depth:	35.0
Formation End Depth:	36.0
Formation End Depth UOM:	ft

Overburden and Bedrock Materials Interval

Formation ID:	932725727
Layer:	1

Color:	2
General Color:	GREY
Material 1:	05
Material 1 Desc:	CLAY
Material 2:	12
Material 2 Desc:	STONES
Material 3:	
Material 3 Desc:	
Formation Top Depth:	0.0
Formation End Depth:	35.0
Formation End Depth UOM:	ft

Method of Construction & Well Use

Method Construction ID:	966904898
Method Construction Code:	6
Method Construction:	Boring
Other Method Construction:	

Pipe Information

Pipe ID:	11044186
Casing No:	1
Comment:	
Alt Name:	

Construction Record - Casing

Casing ID:	930807898
Layer:	1
Material:	3
Open Hole or Material:	CONCRETE
Depth From:	
Depth To:	36.0
Casing Diameter:	36.0
Casing Diameter UOM:	inch
Casing Depth UOM:	ft

Results of Well Yield Testing

Pumping Test Method Desc:	PUMP
Pump Test ID:	996904898
Pump Set At:	
Static Level:	28.0
Final Level After Pumping:	32.0
Recommended Pump Depth:	32.0
Pumping Rate:	1.0
Flowing Rate:	
Recommended Pump Rate:	1.0
Levels UOM:	ft
Rate UOM:	GPM
Water State After Test Code:	1
Water State After Test:	CLEAR
Pumping Test Method:	1
Pumping Duration HR:	1
Pumping Duration MIN:	0
Flowing:	No

Water Details

Water ID:	933988518

Layer:	1
Kind Code:	1
Kind:	FRESH
Water Found Depth:	36.0
Water Found Depth UOM:	ft

Unplottable Summary

Total: 5 Unplottable sites

DB	Company Name/Site Name	Address	City	Postal
CA	Ballymore Development (Sutton) Corp.	Baseline Rd North side of Baseline Road	Georgina ON	
CA	517818 ONTARIO LIMITED	PT.LOT 22, CONC. 5	GEORGINA TOWN ON	
ECA	Ballymore Development (Sutton) Corp.	Baseline Road	Georgina ON	L4E 4H1
FST	CBM	BASELINE RD CON 9	SUTTON ON	
SPL	ONTARIO HYDRO	LOT 23, CONCESSION 5 TRANSFORMER	GEORGINA TOWN ON	

Unplottable Report

Site: ***Ballymore Development (Sutton) Corp.***
Baseline Rd North side of Baseline Road Georgina ON

Database: ***CA***

Certificate #:	2172-89TK2G
Application Year:	2010
Issue Date:	11/17/2010
Approval Type:	Municipal and Private Sewage Works
Status:	Approved
Application Type:	
Client Name:	
Client Address:	
Client City:	
Client Postal Code:	
Project Description:	
Contaminants:	
Emission Control:	

Site: ***517818 ONTARIO LIMITED***
PT.LOT 22, CONC. 5 GEORGINA TOWN ON

Database: ***CA***

Certificate #:	8-3083-93-
Application Year:	93
Issue Date:	4/21/1993
Approval Type:	Industrial air
Status:	Approved
Application Type:	
Client Name:	
Client Address:	
Client City:	
Client Postal Code:	
Project Description:	WASTE OIL FURNACE MODEL RA(D)-235
Contaminants:	Suspended Particulate Matter, Nitrogen Oxides, Sulphur Dioxide, Zinc
Emission Control:	No Controls

Site: ***Ballymore Development (Sutton) Corp.***
Baseline Road Georgina ON L4E 4H1

Database: ***ECA***

Approval No:	5172-9P4NXA	***MOE District:***	
Approval Date:	2014-09-29	***City:***	
Status:	Approved	***Longitude:***	
Record Type:	ECA	***Latitude:***	
Link Source:	IDS	***Geometry X:***	
SWP Area Name:		***Geometry Y:***	
Approval Type:	ECA-MUNICIPAL AND PRIVATE SEWAGE WORKS		
Project Type:	MUNICIPAL AND PRIVATE SEWAGE WORKS		
Business Name:	Ballymore Development (Sutton) Corp.		
Address:	Baseline Road		
Full Address:			
Full PDF Link:	https://www.accessenvironment.ene.gov.on.ca/instruments/2840-9NVKAQ-14.pdf		
PDF Site Location:			

Site: ***CBM***
BASELINE RD CON 9 SUTTON ON

Database: ***FST***

Inventory No:	10992261	***Tank Material:***	Fiberglass (FRP)

Inventory Status:	Active	***Corrosion Protect:***	Fiberglass
Installation Year:		***Overfill Protection:***	
Capacity:		***Inventory Context:***	FS Liquid Fuel Tank
Capacity Unit:		***Inventory Item:***	FS LIQUID FUEL TANK
Tank Type:			
Manufacturer:			
Model:			
Description:	UNDERGROUND TANK		

Site: ***ONTARIO HYDRO***
LOT 23, CONCESSION 5 TRANSFORMER GEORGINA TOWN ON

Database: ***SPL***

Ref No:	92982	***Municipality No:***	27408
Year:		***Nature of Damage:***	
Incident Dt:	11/2/1993	***Discharger Report:***	
Dt MOE Arvl on Scn:		***Material Group:***	
MOE Reported Dt:	11/2/1993	***Impact to Health:***	
Dt Document Closed:		***Agency Involved:***	
Site No:			
MOE Response:			
Site County/District:			
Site Geo Ref Meth:			
Site District Office:			
Nearest Watercourse:			
Site Name:			
Site Address:			
Site Region:			
Site Municipality:	GEORGINA TOWN		
Site Lot:			
Site Conc:			
Site Geo Ref Accu:			
Site Map Datum:			
Northing:			
Easting:			
Incident Cause:	COOLING SYSTEM LEAK		
Incident Preceding Spill:			
Environment Impact:	CONFIRMED		
Health Env Consequence:			
Nature of Impact:	Soil contamination		
Contaminant Qty:			
Contaminant Qty 1:			
Contaminant Unit:			
Client Type:			
Source Type:			
Contaminant Code:			
Contaminant Name:			
Contaminant Limit 1:			
Contam Limit Freq 1:			
Contaminant UN No 1:			
Receiving Medium:	LAND		
Incident Reason:	DAMAGE BY MOVING EQUIPMENT		
Incident Summary:	ONTARIO HYDRO - 2 L NON-PCB OIL TO SOIL FROM TRANSFORMER KNOCKED OFF POLE		
Activity Preceding Spill:			
Property 2nd Watershed:			
Property Tertiary Watershed:			
Sector Type:			
SAC Action Class:			
Call Report Locatn Geodata:			
Time Reported:			
System Facility Address:			
Client Name:			

Appendix: Database Descriptions

Environmental Risk Information Services (ERIS) can search the following databases. The extent of historical information varies with each database and current information is determined by what is publicly available to ERIS at the time of update. ***Note:*** *Databases denoted with " * " indicates that the database will no longer be updated. See the individual database description for more information.*

Abandoned Aggregate Inventory: Provincial AAGR

The MAAP Program maintains a database of abandoned pits and quarries. Please note that the database is only referenced by lot and concession and city/town location. The database provides information regarding the location, type, size, land use, status and general comments.*

Government Publication Date: Sept 2002*

Aggregate Inventory: Provincial AGR

This database of licensed and permitted pits and quarries is maintained by the Ontario Ministry of Natural Resources and Forestry (MNRF), as regulated under the Aggregate Resources Act, R.S.O. 1990. Aggregate site data has been divided into active and inactive sites. Active sites may be further subdivided into partial surrenders. In partial surrenders, defined areas of a site are inactive while the rest of the site remains active.

Government Publication Date: Up to Nov 2023

Abandoned Mine Information System: Provincial AMIS

The Abandoned Mines Information System contains data on known abandoned and inactive mines located on both Crown and privately held lands. The information was provided by the Ministry of Northern Development and Mines (MNDM), with the following disclaimer: "the database provided has been compiled from various sources, and the Ministry of Northern Development and Mines makes no representation and takes no responsibility that such information is accurate, current or complete". Reported information includes official mine name, status, background information, mine start/end date, primary commodity, mine features, hazards and remediation.

Government Publication Date: 1800-Apr 2024

Anderson's Waste Disposal Sites: Private ANDR

The information provided in this database was collected by examining various historical documents which aimed to characterize the likely position of former waste disposal sites from 1860 to present. The research initiative behind the creation of this database was to identify those sites that are missing from the Ontario MOE Waste Disposal Site Inventory, as well as to provide revisions and corrections to the positions and descriptions of sites currently listed in the MOE inventory. In addition to historic waste disposal facilities, the database also identifies certain auto wreckers and scrap yards that have been extrapolated from documentary sources. Please note that the data is not warranted to be complete, exhaustive or authoritative. The information was collected for research purposes only.

Government Publication Date: 1860s-Present

Aboveground Storage Tanks: Provincial AST

Historical listing of aboveground storage tanks made available by the Department of Natural Resources and Forestry. Includes tanks used to hold water or petroleum. This dataset has been retired as of September 25, 2014 and will no longer be updated.

Government Publication Date: May 31, 2014

Automobile Wrecking & Supplies: Private AUWR

This database provides an inventory of known locations that are involved in the scrap metal, automobile wrecking/recycling, and automobile parts & supplies industry. Information is provided on the company name, location and business type.

Government Publication Date: 1999-Apr 30, 2024

Borehole: Provincial BORE

A borehole is the generalized term for any narrow shaft drilled in the ground, either vertically or horizontally. The information here includes geotechnical investigations or environmental site assessments, mineral exploration, or as a pilot hole for installing piers or underground utilities. Information is from many sources such as the Ministry of Transportation (MTO) boreholes from engineering reports and projects from the 1950 to 1990's in Southern Ontario. Boreholes from the Ontario Geological Survey (OGS) including The Urban Geology Analysis Information System (UGAIS) and the York Peel Durham Toronto (YPDT) database of the Conservation Authority Moraine Coalition. This database will include fields such as location, stratigraphy, depth, elevation, year drilled, etc. For all water well data or oil and gas well data for Ontario please refer to WWIS and OOGW.

Government Publication Date: 1875-Jul 2018

Certificates of Approval: Provincial CA

This database contains the following types of approvals: Air & Noise, Industrial Sewage, Municipal & Private Sewage, Waste Management Systems and Renewable Energy Approvals. The MOE in Ontario states that any facility that releases emissions to the atmosphere, discharges contaminants to ground or surface water, provides potable water supplies, or stores, transports or disposes of waste, must have a Certificate of Approval before it can operate lawfully. Fields include approval number, business name, address, approval date, approval type and status. This database will no longer be updated, as CofA's have been replaced by either Environmental Activity and Sector Registry (EASR) or Environmental Compliance Approval (ECA). Please refer to those individual databases for any information after Oct.31, 2011.

Government Publication Date: 1985-Oct 30, 2011*

Dry Cleaning Facilities: Federal CDRY

List of dry cleaning facilities made available by Environment and Climate Change Canada. Environment and Climate Change Canada's Tetrachloroethylene (Use in Dry Cleaning and Reporting Requirements) Regulations (SOR/2003-79) are intended to reduce releases of tetrachloroethylene to the environment from dry cleaning facilities.

Government Publication Date: Jan 2004-Dec 2022

Commercial Fuel Oil Tanks: Provincial CFOT

Locations of commercial underground fuel oil tanks. This is not a comprehensive or complete inventory of commercial fuel tanks in the province; this listing is a copy of records of registered commercial underground fuel oil tanks obtained under Access to Public Information.
Note that the following types of tanks do not require registration: waste oil tanks in apartments, office buildings, residences, etc.; aboveground gas or diesel tanks. Records are not verified for accuracy or completeness.

Government Publication Date: Oct 2023

Chemical Manufacturers and Distributors: Private CHEM

This database includes information from both a one time study conducted in 1992 and private source and is a listing of facilities that manufacture or distribute chemicals. The production of these chemical substances may involve one or more chemical reactions and/or chemical separation processes (i.e. fractionation, solvent extraction, crystallization, etc.).

Government Publication Date: 1999-Jan 31, 2020

Chemical Register: Private CHM

This database includes a listing of locations of facilities within the Province or Territory that either manufacture and/or distributes chemicals.

Government Publication Date: 1999-Apr 30, 2024

Compressed Natural Gas Stations: Private CNG

Canada has a network of public access compressed natural gas (CNG) refuelling stations. These stations dispense natural gas in compressed form at 3,000 pounds per square inch (psi), the pressure which is allowed within the current Canadian codes and standards. The majority of natural gas refuelling is located at existing retail gasoline that have a separate refuelling island for natural gas. This list of stations is made available by the Canadian Natural Gas Vehicle Alliance.

Government Publication Date: Dec 2012 -May 2024

Inventory of Coal Gasification Plants and Coal Tar Sites: Provincial COAL

This inventory includes both the "Inventory of Coal Gasification Plant Waste Sites in Ontario-April 1987" and the Inventory of Industrial Sites Producing or Using Coal Tar and Related Tars in Ontario-November 1988) collected by the MOE. It identifies industrial sites that produced and continue to produce or use coal tar and other related tars. Detailed information is available and includes: facility type, size, land use, information on adjoining properties, soil condition, site operators/occupants, site description, potential environmental impacts and historic maps available. This was a one-time inventory.*

Government Publication Date: Apr 1987 and Nov 1988*

Compliance and Convictions: Provincial CONV

This database summarizes the fines and convictions handed down by the Ontario courts beginning in 1989. Companies and individuals named here have been found guilty of environmental offenses in Ontario courts of law.

Government Publication Date: 1989-Jun 2024

Certificates of Property Use: Provincial CPU

This is a subset taken from Ontario's Environmental Registry (EBR) database. It will include CPU's on the registry such as (EPA s. 168.6) - Certificate of Property Use.

Government Publication Date: 1994 - July 31, 2024

Drill Hole Database: Provincial DRL

The Ontario Drill Hole Database contains information on more than 113,000 percussion, overburden, sonic and diamond drill holes from assessment files on record with the department of Mines and Minerals. Please note that limited data is available for southern Ontario, as it was the last area to be completed. The database was created when surveys submitted to the Ministry were converted in the Assessment File Research Image Database (AFRI) project. However, the degree of accuracy (coordinates) as to the exact location of drill holes is dependent upon the source document submitted to the MNDM. Levels of accuracy used to locate holes are: centering on the mining claim; a sketch of the mining claim; a 1:50,000 map; a detailed company map; or from submitted a "Report of Work".

Government Publication Date: 1886 - Aug 2023

Delisted Fuel Tanks: Provincial DTNK

List of fuel storage tank sites that were once found in - and have since been removed from - the list of fuel storage tanks made available by the regulatory agency under Access to Public Information.

Government Publication Date: Oct 2023

Environmental Activity and Sector Registry: Provincial EASR

On October 31, 2011, a smarter, faster environmental approvals system came into effect in Ontario. The EASR allows businesses to register certain activities with the ministry, rather than apply for an approval. The registry is available for common systems and processes, to which preset rules of operation can be applied. The EASR is currently available for: heating systems, standby power systems and automotive refinishing. Businesses whose activities aren't subject to the EASR may apply for an ECA (Environmental Compliance Approval), Please see our ECA database.

Government Publication Date: Oct 2011-Jul 31, 2024

Environmental Registry: Provincial EBR

The Environmental Registry lists proposals, decisions and exceptions regarding policies, Acts, instruments, or regulations that could significantly affect the environment. Through the Registry, thirteen provincial ministries notify the public of upcoming proposals and invite their comments. For example, if a local business is requesting a permit, license, or certificate of approval to release substances into the air or water; these are notified on the registry. Data includes: Approval for discharge into the natural environment other than water (i.e. Air) - EPA s. 9, Approval for sewage works - OWRA s. 53(1), and EPA s. 27 - Approval for a waste disposal site. For information regarding Permit to Take Water (PTTW), Certificate of Property Use (CPU) and (ORD) Orders please refer to those individual databases.

Government Publication Date: 1994 - July 31, 2024

Environmental Compliance Approval: Provincial ECA

On October 31, 2011, a smarter, faster environmental approvals system came into effect in Ontario. In the past, a business had to apply for multiple approvals (known as certificates of approval) for individual processes and pieces of equipment. Today, a business either registers itself, or applies for a single approval, depending on the types of activities it conducts. Businesses whose activities aren't subject to the EASR may apply for an ECA. A single ECA addresses all of a business's emissions, discharges and wastes. Separate approvals for air, noise and waste are no longer required. This database will also include Renewable Energy Approvals. For certificates of approval prior to Nov 1st, 2011, please refer to the CA database. For all Waste Disposal Sites please refer to the WDS database.

Government Publication Date: Oct 2011-Jul 31, 2024

Environmental Effects Monitoring: Federal EEM

The Environmental Effects Monitoring program assesses the effects of effluent from industrial or other sources on fish, fish habitat and human usage of fisheries resources. Since 1992, pulp and paper mills have been required to conduct EEM studies under the Pulp and Paper Effluent Regulations. This database provides information on the mill name, geographical location and sub-lethal toxicity data.

Government Publication Date: 1992-2007*

ERIS Historical Searches: Private EHS

ERIS has compiled a database of all environmental risk reports completed since March 1999. Available fields for this database include: site location, date of report, type of report, and search radius. As per all other databases, the ERIS database can be referenced on both the map and "Statistical Profile" page.

Government Publication Date: 1999-Mar 31, 2024

Environmental Issues Inventory System: Federal EIIS

The Environmental Issues Inventory System was developed through the implementation of the Environmental Issues and Remediation Plan. This plan was established to determine the location and severity of contaminated sites on inhabited First Nation reserves, and where necessary, to remediate those that posed a risk to health and safety; and to prevent future environmental problems. The EIIS provides information on the reserve under investigation, inventory number, name of site, environmental issue, site action (Remediation, Site Assessment), and date investigation completed.

Government Publication Date: 1992-2001*

Emergency Management Historical Event: Provincial EMHE

List of locations of historical occurrences of emergency events, including those assigned to the Ministry of Natural Resources by Order-In-Council (OIC) under the Emergency Management and Civil Protection Act, as well as events where MNR provided requested emergency response assistance. Many of these events will have involved community evacuations, significant structural loss, and/or involvement of MNR emergency response staff. These events fall into one of ten (10) type categories: Dam Failure; Drought / Low Water; Erosion; Flood; Forest Fire; Soil and Bedrock Instability; Petroleum Resource Center Event, EMO Requested Assistance, Continuity of Operations Event, Other Requested Assistance. EMHE record details are reproduced by ERIS under License with the Ontario Ministry of Natural Resources © Queen's Printer for Ontario, 2017.

Government Publication Date: Apr 30, 2022

Environmental Penalty Annual Report: Provincial EPAR

This database contains data from Ontario's annual environmental penalty report published by the Ministry of the Environment and Climate Change. These reports provide information on environmental penalties for land or water violations issued to companies in one of the nine industrial sectors covered by the Municipal Industrial Strategy for Abatement (MISA) regulations.

Government Publication Date: Jan 1, 2011 - Dec 31, 2023

List of Expired Fuels Safety Facilities: Provincial EXP

List of facilities and tanks for which there was once a fuel registration. This is not a comprehensive or complete inventory of expired tanks/tank facilities in the province; this listing is a copy of previously registered tanks and facilities obtained under Access to Public Information. Includes private fuel outlets, bulk plants, fuel oil tanks, gasoline stations, marinas, propane filling stations, liquid fuel tanks, piping systems, etc; includes tanks which have been removed from the ground.
Notes: registration was not required for private fuel underground/aboveground storage tanks prior to January 1990, nor for furnace oil tanks prior to May 1, 2002; registration is not required for waste oil tanks in apartments, office buildings, residences, etc., or aboveground gas or diesel tanks. Records are not verified for accuracy or completeness.

Government Publication Date: Oct 2023

Federal Convictions: Federal FCON

Environment Canada maintains a database referred to as the "Environmental Registry" that details prosecutions under the Canadian Environmental Protection Act (CEPA) and the Fisheries Act (FA). Information is provided on the company name, location, charge date, offence and penalty.

Government Publication Date: 1988-Jun 2007*

Contaminated Sites on Federal Land: Federal FCS

The Federal Contaminated Sites Inventory includes information on known federal contaminated sites under the custodianship of departments, agencies and consolidated Crown corporations as well as those that are being or have been investigated to determine whether they have contamination arising from past use that could pose a risk to human health or the environment. The inventory also includes non-federal contaminated sites for which the Government of Canada has accepted some or all financial responsibility. It does not include sites where contamination has been caused by, and which are under the control of, enterprise Crown corporations, private individuals, firms or other levels of government. Includes fire training sites and sites at which Per- and Polyfluoroalkyl Substances (PFAS) are a concern.

Government Publication Date: Jun 2000-Jun 2024

Fisheries & Oceans Fuel Tanks: Federal FOFT

Fisheries & Oceans Canada maintains an inventory of aboveground & underground fuel storage tanks located on Fisheries & Oceans property or controlled by DFO. Our inventory provides information on the site name, location, tank owner, tank operator, facility type, storage tank location, tank contents & capacity, and date of tank installation.

Government Publication Date: 1964-Sep 2019

Federal Identification Registry for Storage Tank Systems (FIRSTS): Federal FRST

A list of federally regulated Storage tanks from the Federal Identification Registry for Storage Tank Systems (FIRSTS). FIRSTS is Environment and Climate Change Canada's database of storage tank systems subject to the Storage Tank for Petroleum Products and Allied Petroleum Products Regulations. The main objective of the Regulations is to prevent soil and groundwater contamination from storage tank systems located on federal and aboriginal lands. Storage tank systems that do not have a valid identification number displayed in a readily visible location on or near the storage tank system may be refused product delivery.

Government Publication Date: Oct 31, 2021

Fuel Storage Tank: Provincial FST

List of registered private and retail fuel storage tanks. This is not a comprehensive or complete inventory of private and retail fuel storage tanks in the province; this listing is a copy of registered private and retail fuel storage tanks, obtained under Access to Public Information.
Notes: registration was not required for private fuel underground/aboveground storage tanks prior to January 1990, nor for furnace oil tanks prior to May 1, 2002; registration is not required for waste oil tanks in apartments, office buildings, residences, etc., or aboveground gas or diesel tanks. Records are not verified for accuracy or completeness.

Government Publication Date: Oct 2023

Fuel Storage Tank - Historic: Provincial FSTH

The Fuels Safety Branch of the Ontario Ministry of Consumer and Commercial Relations maintained a database of all registered private fuel storage tanks. Public records of private fuel storage tanks are only available since the registration became effective in September 1989. This information is now collected by the Technical Standards and Safety Authority.

Government Publication Date: Pre-Jan 2010*

Ontario Regulation 347 Waste Generators Summary: Provincial GEN

Regulation 347 of the Ontario EPA defines a waste generation site as any site, equipment and/or operation involved in the production, collection, handling and/or storage of regulated wastes. A generator of regulated waste is required to register the waste generation site and each waste produced, collected, handled, or stored at the site. This database contains the registration number, company name and address of registered generators including the types of hazardous wastes generated. It includes data on waste generating facilities such as: drycleaners, waste treatment and disposal facilities, machine shops, electric power distribution etc. This information is a summary of all years from 1986 including the most currently available data. Some records may contain, within the company name, the phrase "See & Use..." followed by a series of letters and numbers. This occurs when one company is amalgamated with or taken over by another registered company. The number listed as "See & Use", refers to the new ownership and the other identification number refers to the original ownership. This phrase serves as a link between the 2 companies until operations have been fully transferred.

Government Publication Date: 1986-Oct 31, 2022

Greenhouse Gas Emissions from Large Facilities: Federal GHG

List of greenhouse gas emissions from large facilities made available by Environment Canada. Greenhouse gas emissions in kilotonnes of carbon dioxide equivalents (kt CO2 eq).

Government Publication Date: 2013-Dec 2022

TSSA Historic Incidents: Provincial HINC

List of historic incidences of spills and leaks of diesel, fuel oil, gasoline, natural gas, propane, and hydrogen recorded by the TSSA in their previous incident tracking system. The TSSA's Fuels Safety Program administers the Technical Standards & Safety Act 2000, providing fuel-related safety services associated with the safe transportation, storage, handling and use of fuels such as gasoline, diesel, propane, natural gas and hydrogen. Under this Act, the TSSA regulates fuel suppliers, storage facilities, transport trucks, pipelines, contractors and equipment or appliances that use fuels. Records are not verified for accuracy or completeness. This is not a comprehensive or complete inventory of historical fuel spills and leaks in the province. This listing is a copy of the data captured at one moment in time and is hence limited by the record date provided here.

Government Publication Date: 2006-June 2009*

Indian & Northern Affairs Fuel Tanks: Federal IAFT

The Department of Indian & Northern Affairs Canada (INAC) maintains an inventory of aboveground & underground fuel storage tanks located on both federal and crown land. Our inventory provides information on the reserve name, location, facility type, site/facility name, tank type, material & ID number, tank contents & capacity, and date of tank installation.

Government Publication Date: 1950-Aug 2003*

Fuel Oil Spills and Leaks: Provincial INC

Listing of spills and leaks of diesel, fuel oil, gasoline, natural gas, propane, and hydrogen reported to the Spills Action Centre (SAC). This is not a comprehensive or complete inventory of fuel-related leaks, spills, and incidents in the province; this listing in a copy of incidents reported to the SAC, obtained under Access to Public Information. Includes incidents from fuel-related hazards such as spills, fires, and explosions. Records are not verified for accuracy or completeness.

Government Publication Date: 31 Oct, 2023

Landfill Inventory Management Ontario: Provincial LIMO

The Landfill Inventory Management Ontario (LIMO) database is updated every year, as the Ministry of the Environment, Conservation and Parks compiles new and updated information. Includes small and large landfills currently operating as well as those which are closed and historic. Operators of larger landfills provide landfill information for the previous operating year to the ministry for LIMO including: estimated amount of total waste received, landfill capacity, estimated total remaining landfill capacity, fill rates, engineering designs, reporting and monitoring details, size of location, service area, approved waste types, leachate of site treatment, contaminant attenuation zone and more. The small landfills include information such as site owner, site location and certificate of approval # and status.

Government Publication Date: Mar 31, 2022

Canadian Mine Locations: Private MINE

This information is collected from the Canadian & American Mines Handbook. The Mines database is a national database that provides over 290 listings on mines (listed as public companies) dealing primarily with precious metals and hard rocks. Listed are mines that are currently in operation, closed, suspended, or are still being developed (advanced projects). Their locations are provided as geographic coordinates (x, y and/or longitude, latitude). As of 2002, data pertaining to Canadian smelters and refineries has been appended to this database.

Government Publication Date: 1998-2009*

Mineral Occurrences: Provincial MNR

In the early 70's, the Ministry of Northern Development and Mines created an inventory of approximately 19,000 mineral occurrences in Ontario, in regard to metallic and industrial minerals, as well as some information on building stones and aggregate deposits. Please note that the "Horizontal Positional Accuracy" is approximately +/- 200 m. Many reference elements for each record were derived from field sketches using pace or chain/tape measurements against claim posts or topographic features in the area. The primary limiting factor for the level of positional accuracy is the scale of the source material. The testing of horizontal accuracy of the source materials was accomplished by comparing the plan metric (X and Y) coordinates of that point with the coordinates of the same point as defined from a source of higher accuracy.

Government Publication Date: 1846-Feb 2024

National Analysis of Trends in Emergencies System (NATES): Federal NATE

In 1974 Environment Canada established the National Analysis of Trends in Emergencies System (NATES) database, for the voluntary reporting of significant spill incidents. The data was to be used to assist in directing the work of the emergencies program. NATES ran from 1974 to 1994. Extensive information is available within this database including company names, place where the spill occurred, date of spill, cause, reason and source of spill, damage incurred, and amount, concentration, and volume of materials released.

Government Publication Date: 1974-1994*

Non-Compliance Reports: Provincial NCPL

The Ministry of the Environment provides information about non-compliant discharges of contaminants to air and water that exceed legal allowable limits, from regulated industrial and municipal facilities. A reported non-compliance failure may be in regard to a Control Order, Certificate of Approval, Sectoral Regulation or specific regulation/act.

Government Publication Date: Dec 31, 2022

National Defense & Canadian Forces Fuel Tanks: Federal NDFT

The Department of National Defense and the Canadian Forces maintains an inventory of all aboveground & underground fuel storage tanks located on DND lands. Our inventory provides information on the base name, location, tank type & capacity, tank contents, tank class, date of tank installation, date tank last used, and status of tank as of May 2001. This database will no longer be updated due to the new National Security protocols which have prohibited any release of this database.

Government Publication Date: Up to May 2001*

National Defense & Canadian Forces Spills: Federal NDSP

The Department of National Defense and the Canadian Forces maintains an inventory of spills to land and water. All spill sites have been classified under the "Transportation of Dangerous Goods Act - 1992". Our inventory provides information on the facility name, location, spill ID #, spill date, type of spill, as well as the quantity of substance spilled & recovered.

Government Publication Date: Mar 1999-Nov 2023

National Defence & Canadian Forces Waste Disposal Sites: Federal NDWD

The Department of National Defence and the Canadian Forces maintains an inventory of waste disposal sites located on DND lands. Where available, our inventory provides information on the base name, location, type of waste received, area of site, depth of site, year site opened/closed and status.

Government Publication Date: 2001-Apr 2007*

National Energy Board Pipeline Incidents: Federal NEBI

Locations of pipeline incidents from 2008 to present, made available by the Canada Energy Regulator (CER) - previously the National Energy Board (NEB). Includes incidents reported under the Onshore Pipeline Regulations and the Processing Plant Regulations related to pipelines under federal jurisdiction, does not include incident data related to pipelines under provincial or territorial jurisdiction.

Government Publication Date: 2008-Jun 30, 2021

National Energy Board Wells: Federal NEBP

The NEBW database contains information on onshore & offshore oil and gas wells that are outside provincial jurisdiction(s) and are thereby regulated by the National Energy Board. Data is provided regarding the operator, well name, well ID No./UWI, status, classification, well depth, spud and release date.

Government Publication Date: 1920-Feb 2003*

National Environmental Emergencies System (NEES): Federal NEES

In 2000, the Emergencies program implemented NEES, a reporting system for spills of hazardous substances. For the most part, this system only captured data from the Atlantic Provinces, some from Quebec and Ontario and a portion from British Columbia. Data for Alberta, Saskatchewan, Manitoba and the Territories was not captured. However, NEES is also a repository for previous Environment Canada spill datasets. NEES is composed of the historic datasets ' or Trends ' which dates from approximately 1974 to present. NEES Trends is a compilation of historic databases, which were merged and includes data from NATES (National Analysis of Trends in Emergencies System), ARTS (Atlantic Regional Trends System), and NEES. In 2001, the Emergencies Program determined that variations in reporting regimes and requirements between federal and provincial agencies made national spill reporting and trend analysis difficult to achieve. As a consequence, the department has focused efforts on capturing data on spills of substances which fall under its legislative authority only (CEPA and FA). As such, the NEES database will be decommissioned in December 2004.

Government Publication Date: 1974-2003*

National PCB Inventory: Federal NPCB

Environment Canada's National PCB inventory includes information on in-use PCB containing equipment in Canada including federal, provincial and private facilities. Federal out-of-service PCB containing equipment and PCB waste owned by the federal government or by federally regulated industries such as airlines, railway companies, broadcasting companies, telephone and telecommunications companies, pipeline companies, etc. are also listed. Although it is not Environment Canada's mandate to collect data on non-federal PCB waste, the National PCB inventory includes some information on provincial and private PCB waste and storage sites. Some addresses provided may be Head Office addresses and are not necessarily the location of where the waste is being used or stored.

Government Publication Date: 1988-2008*

National Pollutant Release Inventory 1993-2020: Federal NPR2

The National Pollutant Release Inventory (NPRI) is Canada's public inventory of pollutant releases (to air, water and land), disposals, and transfers for recycling. The inventory, managed by Environment and Climate Change Canada, tracks over 300 substances. Under the authority of the Canadian Environmental Protection Act (CEPA), owners or operators of facilities that meet published reporting requirements are required to report to the NPRI.

Government Publication Date: Sep 2020

National Pollutant Release Inventory - Historic: Federal NPRI

Environment Canada has defined the National Pollutant Release Inventory ("NPRI") as a federal government initiative designed to collect comprehensive national data regarding releases to air, water, or land, and waste transfers for recycling for more than 300 listed substances. This data holds historic records; current records are found in NPR2.

Government Publication Date: 1993-May 2017

Oil and Gas Wells: Private OGWE

The Nickle's Energy Group (publisher of the Daily Oil Bulletin) collects information on drilling activity including operator and well statistics. The well information database includes name, location, class, status and depth. The main Nickle's database is updated on a daily basis, however, this database is updated on a monthly basis. More information is available at www.nickles.com.

Government Publication Date: 1988-May 31, 2024

Ontario Oil and Gas Wells: Provincial OOGW

In 1998, the MNR handed over to the Ontario Oil, Gas and Salt Resources Corporation, the responsibility of maintaining a database of oil and gas wells drilled in Ontario. The OGSR Library has over 20,000+ wells in their database. Information available for all wells in the ERIS database include well owner/operator, location, permit issue date, and well cap date, license No., status, depth and the primary target (rock unit) of the well being drilled. All geology/stratigraphy table information, plus all water table information is also provide for each well record.

Government Publication Date: 1800-Aug 2023

Inventory of PCB Storage Sites: Provincial OPCB

The Ontario Ministry of Environment, Waste Management Branch, maintains an inventory of PCB storage sites within the province. Ontario Regulation 11/82 (Waste Management - PCB) and Regulation 347 (Generator Waste Management) under the Ontario EPA requires the registration of inactive PCB storage equipment and/or disposal sites of PCB waste with the Ontario Ministry of Environment. This database contains information on: 1) waste quantities; 2) major and minor sites storing liquid or solid waste; and 3) a waste storage inventory.

Government Publication Date: 1987-Oct 2004; 2012-Dec 2013

Orders: Provincial ORD

This is a subset taken from Ontario's Environmental Registry (EBR) database. It will include Orders on the registry such as (EPA s. 17) - Order for remedial work, (EPA s. 18) - Order for preventative measures, (EPA s. 43) - Order for removal of waste and restoration of site, (EPA s. 44) - Order for conformity with Act for waste disposal sites, (EPA s. 136) - Order for performance of environmental measures.

Government Publication Date: 1994 - July 31, 2024

Canadian Pulp and Paper: Private PAP

This information is part of the Pulp and Paper Canada Directory. The Directory provides a comprehensive listing of the locations of pulp and paper mills and the products that they produce.

Government Publication Date: 1999, 2002, 2004, 2005, 2009-2014

Parks Canada Fuel Storage Tanks: Federal PCFT

Canadian Heritage maintains an inventory of known fuel storage tanks operated by Parks Canada, in both National Parks and at National Historic Sites. The database details information on site name, location, tank install/removal date, capacity, fuel type, facility type, tank design and owner/operator.

Government Publication Date: 1920-Jan 2005*

Pesticide Register: Provincial PES

The Ontario Ministry of the Environment and Climate Change maintains a database of licensed operators and vendors of registered pesticides.

Government Publication Date: Oct 2011-Jul 31, 2024

Ontario PFAS Spills: Provincial PFAS

This specific list of spills includes those incidents where one or more of the listed contaminants are identified in the PFAS Structure List and/or PFAS Chemicals Without Explicit Structure List made available by the United States Environmental Protection Agency (US EPA), is originally sourced from the Ministry of the Environment, Conservation and Parks spills related data. Information from 1988-2002 was part of the ORIS (Occurrence Reporting Information System). The SAC (Spills Action Centre) handles all spills reported in Ontario. Regulations for spills in Ontario are part of the MOE's Environmental Protection Act, Part X.

Government Publication Date: 1988-Mar 2024; May 2024

NPRI Reporters - PFAS Substances: Federal PFCH

The National Pollutant Release Inventory (NPRI) is Canada's public inventory of releases, disposals, and transfers, tracking over 320 pollutants. Per - and polyfluoroalkyl substances (PFAS) are a group of over 4,700 human-made substances for which adverse environmental and health effects have been observed. This listing of PFAS substance reporters includes those NPRI facilities that reported substances that are found in either: a) the Comprehensive Global Database of PFASs compiled by the Organisation for Economic Co-operation and Development (OECD), b) the US Environmental Protection Agency (US EPA) Master List of PFAS Substances, c) the US EPA list of PFAS chemicals without explicit structures, or d) the US EPA list of PFAS structures (encompassing the largest set of structures having sufficient levels of fluorination to potentially impart PFAS-type properties).

Government Publication Date: Sep 2020

Potential PFAS Handlers from NPRI: Federal PFHA

The National Pollutant Release Inventory (NPRI) is Canada's public inventory of releases, disposals, and transfers, tracking over 320 pollutants. Per - and polyfluoroalkyl substances (PFAS) are a group of over 4,700 human-made substances for which adverse environmental and health effects have been observed. This list of potential PFAS handlers includes those NPRI facilities that reported business activity (NAICS code) included in the US Environmental Protection Agency (US EPA) list of Potential PFAS-Handling Industry Sectors, further described as operating in industry sectors where literature reviews indicate that PFAS may be handled and/or released. Inclusion of a facility in this listing does not indicate that PFAS are being manufactured, processed, used, or released by the facility - these are facilities that potentially handle PFAS based on their industrial profile.

Government Publication Date: Sep 2020

Pipeline Incidents: Provincial PINC

List of pipeline incidents (strikes, leaks, spills). This is not a comprehensive or complete inventory of pipeline incidents in the province; this listing in an historical copy of records previously obtained under Access to Public Information. Records are not verified for accuracy or completeness.

Government Publication Date: Feb 28, 2021

Potential PFAS Handlers from EASR: Provincial PPHA

The Ontario Environmental Activity and Sector Registry (EASR), described in Ontario Regulation 245/11, allows businesses with less complex operations - and hence not requiring an Environmental Compliance Approval - to register their activities with the Ontario Ministry of the Environment, Conservation and Parks (MECP). This list of potential PFAS handlers includes those EASR facilities that reported business activity (NAICS code) included in the US Environmental Protection Agency (US EPA) list of Potential PFAS-Handling Industry Sectors, further described as operating in industry sectors where literature reviews indicate that PFAS may be handled and/or released. Inclusion of a facility in this listing does not indicate that PFAS are being manufactured, processed, used.

Government Publication Date: Jun 30, 2024

Private and Retail Fuel Storage Tanks: Provincial PRT

The Fuels Safety Branch of the Ontario Ministry of Consumer and Commercial Relations maintained a database of all registered private fuel storage tanks and licensed retail fuel outlets. This database includes an inventory of locations that have gasoline, oil, waste oil, natural gas and/or propane storage tanks on their property. The MCCR no longer collects this information. This information is now collected by the Technical Standards and Safety Authority (TSSA).

Government Publication Date: 1989-1996*

Permit to Take Water: Provincial PTTW

This is a subset taken from Ontario's Environmental Registry (EBR) database. It will include PTTW's on the registry such as OWRA s. 34 - Permit to take water.

Government Publication Date: 1994 - July 31, 2024

Ontario Regulation 347 Waste Receivers Summary: Provincial REC

Part V of the Ontario Environmental Protection Act ("EPA") regulates the disposal of regulated waste through an operating waste management system or a waste disposal site operated or used pursuant to the terms and conditions of a Certificate of Approval or a Provisional Certificate of Approval. Regulation 347 of the Ontario EPA defines a waste receiving site as any site or facility to which waste is transferred by a waste carrier. A receiver of regulated waste is required to register the waste receiving facility. This database represents registered receivers of regulated wastes, identified by registration number, company name and address, and includes receivers of waste such as: landfills, incinerators, transfer stations, PCB storage sites, sludge farms and water pollution control plants. This information is a summary of all years from 1986 including the most currently available data.

Government Publication Date: 1986-1990, 1992-2021

Record of Site Condition: Provincial RSC

The Record of Site Condition (RSC) is part of the Ministry of the Environment's Brownfields Environmental Site Registry. Protection from environmental cleanup orders for property owners is contingent upon documentation known as a record of site condition (RSC) being filed in the Environmental Site Registry. In order to file an RSC, the property must have been properly assessed and shown to meet the soil, sediment and groundwater standards appropriate for the use (such as residential) proposed to take place on the property. The Record of Site Condition Regulation (O. Reg. 153/04) details requirements related to site assessment and clean up. RSCs filed after July 1, 2011 will also be included as part of the new (O.Reg. 511/09). The Government of Ontario states that it is not responsible for the accuracy of the information in this Registry.

Government Publication Date: 1997-Sept 2001, Oct 2004-Jul 2024

Retail Fuel Storage Tanks: Private RST

This database includes an inventory of retail fuel outlet locations (including marinas) that have on their property gasoline, oil, waste oil, natural gas and / or propane storage tanks.

Government Publication Date: 1999-Apr 30, 2024

Scott's Manufacturing Directory: Private SCT

Scott's Directories is a data bank containing information on over 200,000 manufacturers across Canada. Even though Scott's listings are voluntary, it is the most comprehensive database of Canadian manufacturers available. Information concerning a company's address, plant size, and main products are included in this database.

Government Publication Date: 1992-Mar 2011*

Ontario Spills: Provincial SPL

List of spills and incidents made available by the Ministry of the Environment, Conservation and Parks. This database identifies information such as location (approximate), type and quantity of contaminant, date of spill, environmental impact, cause, nature of impact, etc. Information from 1988-2002 was part of the ORIS (Occurrence Reporting Information System). The SAC (Spills Action Centre) handles all spills reported in Ontario. Regulations for spills in Ontario are part of the MOE's Environmental Protection Act, Part X.

Government Publication Date: 1988-Mar 2024; May 2024

Wastewater Discharger Registration Database: Provincial SRDS

Facilities that report either municipal treated wastewater effluent or industrial wastewater discharges under the Effluent Monitoring and Effluent Limits (EMEL) and Municipal/Industrial Strategy for Abatement Regulations. The Municipal/Industrial Strategy for Abatement (MISA) division of the Ontario Ministry of Environment keeps record of direct dischargers of toxic pollutants within nine sectors including: Electric Power Generation, Mining, Petroleum Refining, Organic Chemicals, Inorganic Chemicals, Pulp & Paper, Metal Casting, Iron & Steel, and Quarries.

Government Publication Date: 1990-Dec 31, 2021

Anderson's Storage Tanks: Private TANK

The information provided in this database was collected by examining various historical documents, which identified the location of former storage tanks, containing substances such as fuel, water, gas, oil, and other various types of miscellaneous products. Information is available in regard to business operating at tank site, tank location, permit year, permit & installation type, no. of tanks installed & configuration and tank capacity. Data contained within this database pertains only to the city of Toronto and is not warranted to be complete, exhaustive or authoritative. The information was collected for research purposes only.

Government Publication Date: 1915-1953*

Transport Canada Fuel Storage Tanks: Federal TCFT

List of fuel storage tanks currently or previously owned or operated by Transport Canada. This inventory also includes tanks on The Pickering Lands, which refers to 7,530 hectares (18,600 acres) of land in Pickering, Markham, and Uxbridge owned by the Government of Canada since 1972; properties on this land has been leased by the government since 1975, and falls under the Site Management Policy of Transport Canada, but is administered by Public Works and Government Services Canada. This inventory provides information on the site name, location, tank age, capacity and fuel type.

Government Publication Date: 1970 - Apr 2023

Variances for Abandonment of Underground Storage Tanks: Provincial VAR

Listing of variances granted for storage tank abandonment. This is not a comprehensive or complete inventory of tank abandonment variances in the province; this listing is a copy of tank abandonment variance records previously obtained under Access to Public Information. In Ontario, registered underground storage tanks must be removed within two years of disuse; if removal of a tank is not feasible, an application may be sought for a variance from this code requirement.
Records are not verified for accuracy or completeness.

Government Publication Date: Feb 28, 2022

Waste Disposal Sites - MOE CA Inventory: Provincial WDS

The Ontario Ministry of Environment, Waste Management Branch, maintains an inventory of known open (active or inactive) and closed disposal sites in the Province of Ontario. Active sites maintain a Certificate of Approval, are approved to receive and are receiving waste. Inactive sites maintain Certificate(s) of Approval but are not receiving waste. Closed sites are not receiving waste. The data contained within this database was compiled from the MOE's Certificate of Approval database. Locations of these sites may be cross-referenced to the Anderson database described under ERIS's Private Source Database section, by the CA number. All new Environmental Compliance Approvals handed out after Oct 31, 2011 for Waste Disposal Sites will still be found in this database.

Government Publication Date: Oct 2011-Jul 31, 2024

Waste Disposal Sites - MOE 1991 Historical Approval Inventory: Provincial WDSH

In June 1991, the Ontario Ministry of Environment, Waste Management Branch, published the "June 1991 Waste Disposal Site Inventory", of all known active and closed waste disposal sites as of October 30st, 1990. For each "active" site as of October 31st 1990, information is provided on site location, site/CA number, waste type, site status and site classification. For each "closed" site as of October 31st 1990, information is provided on site location, site/CA number, closure date and site classification. Locations of these sites may be cross-referenced to the Anderson database described under ERIS's Private Source Database section, by the CA number.

Government Publication Date: Up to Oct 1990*

Water Well Information System: Provincial WWIS

This database describes locations and characteristics of water wells found within Ontario in accordance with Regulation 903. It includes such information as coordinates, construction date, well depth, primary and secondary use, pump rate, static water level, well status, etc. Also included are detailed stratigraphy information, approximate depth to bedrock and the approximate depth to the water table.

Government Publication Date: Dec 31 2023

Definitions

Database Descriptions: This section provides a detailed explanation for each database including: source, information available, time coverage, and acronyms used. They are listed in alphabetic order.

Detail Report: This is the section of the report which provides the most detail for each individual record. Records are summarized by location, starting with the project property followed by records in closest proximity.

Distance: The distance value is the distance between plotted points, not necessarily the distance between the sites' boundaries. All values are an approximation.

Direction: The direction value is the compass direction of the site in respect to the project property and/or center point of the report.

Elevation: The elevation value is taken from the location at which the records for the site address have been plotted. All values are an approximation. Source: Google Elevation API.

Executive Summary: This portion of the report is divided into 3 sections:

'Report Summary'- Displays a chart indicating how many records fall on the project property and, within the report search radii.

'Site Report Summary'-Project Property'- This section lists all the records which fall on the project property. For more details, see the 'Detail Report' section.

'Site Report Summary-Surrounding Properties'- This section summarizes all records on adjacent properties, listing them in order of proximity from the project property. For more details, see the 'Detail Report' section.

Map Key: The map key number is assigned according to closest proximity from the project property. Map Key numbers always start at #1. The project property will always have a map key of '1' if records are available. If there is a number in brackets beside the main number, this will indicate the number of records on that specific property. If there is no number in brackets, there is only one record for that property.

The symbol and colour used indicates 'elevation': the red inverted triangle will dictate 'ERIS Sites with Lower Elevation', the yellow triangle will dictate 'ERIS Sites with Higher Elevation' and the orange square will dictate 'ERIS Sites with Same Elevation.'

Unplottables: These are records that could not be mapped due to various reasons, including limited geographic information. These records may or may not be in your study area, and are included as reference.

CITY DIRECTORY

Project Property:	*ET24-1438B - Engineering Services - 3525 Baseline Rd, Georgina, ON* *3525 Baseline Rd, Georgina, ON* *Sutton West,ON L0E 1R0*
Project No:	*ET24-1438B*
Requested By:	*Engtec Consulting Inc.*
Order No:	*24091200258*
Date Completed:	*September 18, 2024*

Environmental Risk Information Services
A division of Glacier Media Inc.
1.866.517.5204 | info@erisinfo.com | erisinfo.com

September 18, 2024
RE: CITY DIRECTORY RESEARCH
3525 Baseline Rd, Georgina, ON
Sutton West,ON L0E 1R0

Thank you for contacting ERIS regarding our City Directory Search services. Our staff has conducted a reverse listing City Directory search to determine prior occupants of the subject site and adjacent properties. When searching a range of addresses, all civic addresses within that range found in the Directory are included.

Note: Reverse Listing Directories generally are focused on highly developed areas, while newly developed areas may be covered in the more recent years, older directories tend to cover only "central" parts of the city. To complete the search, we have either utilized the Toronto Reference Library, Library & Archives Canada and multiple digitized directories. While these do not claim to be a complete collection of all reverse listing city directories produced, ERIS has made every effort to provide accurate and complete information. ERIS shall not be held liable for missing, incomplete, or inaccurate information. If you believe there are additional addresses or streets that require searching, please contact us.

Search Criteria:

3525 of Baseline Road

Search Notes:

Sutton West ON is last listed in 1970-71

Search Results Summary

Data from 2012 to 2017 does not include residential information

Date	Source	Comment
2023	DIGITAL BUSINESS DIRECTORY	
2021	DIGITAL BUSINESS DIRECTORY	
2017	DIGITAL BUSINESS DIRECTORY	
2012	DIGITAL BUSINESS DIRECTORY	
2000	POLKS	
1995	POLKS	
1991	MIGHTS	
1985	MIGHTS	
1981	MIGHTS	
1975	MIGHTS	
1970-71	MIGHTS	

2023 BASELINE ROAD

SOURCE: DIGITAL BUSINESS DIRECTORY

NO LISTING FOUND

2021 BASELINE ROAD

SOURCE: DIGITAL BUSINESS DIRECTORY

NO LISTING FOUND

2017 BASELINE ROAD

SOURCE: DIGITAL BUSINESS DIRECTORY

NO LISTING FOUND

2012 BASELINE ROAD

SOURCE: DIGITAL BUSINESS DIRECTORY

NO LISTING FOUND

2000 BASELINE ROAD

SOURCE: POLKS

NO LISTING FOUND

1995 BASELINE ROAD

SOURCE: POLKS

NO LISTING FOUND

1991 BASELINE ROAD

SOURCE: MIGHTS

NO LISTING FOUND

1985 BASELINE ROAD

SOURCE: MIGHTS

NO LISTING FOUND

1981 BASELINE ROAD

SOURCE: MIGHTS

NO LISTING FOUND

1975 BASELINE ROAD

SOURCE: MIGHTS

NO LISTING FOUND

1970-71 BASELINE ROAD

SOURCE: MIGHTS

NO LISTING FOUND

opta
INFORMATION INTELLIGENCE

enviroscan

175 Commerce Valley Drive W
Markham, Ontario L3T 7Z3

T: 1 877 244 9437
W: optaintel.ca

Nate

Site Address:

3525 Baseline Rd Georgina Sutton West Regional Municipality of York ON

Project No:
24091200258

Opta Order ID:

149389

Requested by:
Eleanor Goolab
ERIS

Date Completed:
9/18/2024 1:27:18 PM

Project Name: ET241438B Engineering Services 3525 Baseline Rd Georgina ON

Project #: 24091200258

P.O. #: ET241438B

ENVIROSCAN Report

Search Area: 3525 Baseline Rd Georgina Sutton West Regional Municipality of York ON

Requested by:
Eleanor Goolab
Date Completed: 09/18/2024 13:27:18

enviroscan
OPTA INFORMATION INTELLIGENCE

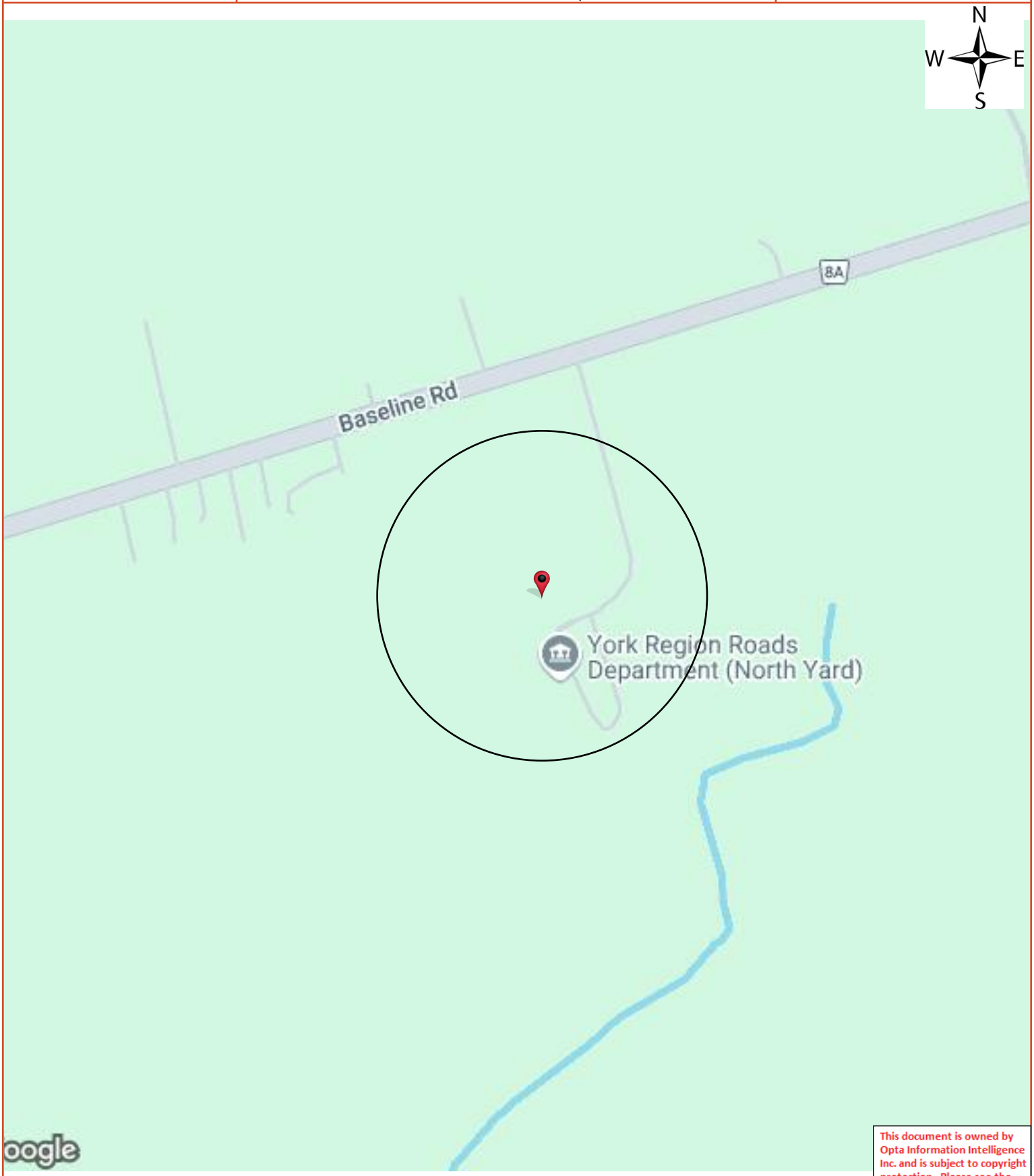

This document is owned by Opta Information Intelligence Inc. and is subject to copyright protection. Please see the full Terms and Conditions at the front of this document.

Opta Historical Environmental Services Enviroscan ™ Terms and Conditions

Report

The documents (hereinafter referred to as the "Documents") to be released as part of the report (hereinafter referred to as the "Report") to be delivered to the purchaser as set out above are documents in Opta's records relating to the described property (hereinafter referred to as the "Property"). Opta makes no representations or warranties respecting the Documents whatsoever, including, without limitation, with respect to the completeness, accuracy or usefulness of the Documents, and does not represent or warrant that these are the only plans and reports prepared in association with the Property or in Opta's possession at the time of Report delivery to the purchaser. The Documents are current as of the date(s) indicated on them. Interpretation of the Documents, if any, is by inference based upon the information which is apparent and obvious on the face of the Documents only. Opta does not represent, warrant or guarantee that interpretations other than those referred to do not exist from other sources. The Report will be prepared for use by the purchaser of the services as shown above hereof only.

Disclaimer

Opta disclaims responsibility for any losses or damages of any kind whatsoever, whether consequential or other, however caused, incurred or suffered, arising directly or indirectly as a result of the services (which services include, but are not limited to, the preparation of the Report provided hereunder), including but not limited to, any losses or damages arising directly or indirectly from any breach of contract, fundamental or otherwise, from reliance on Opta Reports or from any tortious acts or omissions of Opta's agents, employees or representatives.

Entire Agreement

The parties hereto acknowledge and agree to be bound by the terms and conditions hereof. The request form constitutes the entire agreement between the parties pertaining to the subject matter hereof and supersedes all prior and contemporaneous agreements, negotiations and discussions, whether oral or written, and there are no representations or warranties, or other agreements between the parties in connection with the subject matter hereof except as specifically set forth herein. No supplement, modification, waiver, or termination of the request shall be binding, unless confirmed in writing by the parties hereto.

Governing Document

In the event of any conflicts or inconsistencies between the provisions hereof and the Reports, the rights and obligations of the parties shall be deemed to be governed by the request form, which shall be the paramount document.

Law

This agreement shall be governed by and construed in accordance with the laws of the Province of Ontario and the laws of Canada applicable therein.

Project Name: ET241438B
Engineering Services 3525
Baseline Rd Georgina ON
Project #: 24091200258
P.O. #: ET241438B

ENVIROSCAN Report

No Records Found

Requested by:
Eleanor Goolab
Date Completed: 09/18/2024 13:27:18

OPTA INFORMATION INTELLIGENCE

No Records Found

This document is owned by Opta Information Intelligence Inc. and is subject to copyright protection. Please see the full Terms and Conditions at the front of this document.

N
W E
S

Project Name: ET241438B
Engineering Services 3525
Baseline Rd Georgina ON
Project #: 24091200258
P.O. #: ET241438B

Selected Fire Insurance Plans and Inspection Reports

Requested by:
Eleanor Goolab
Date Completed: 09/18/2024 13:27:18

OPTA INFORMATION INTELLIGENCE

Search Fee	**$50.00**

Selected Fire Insurance Plans

None

Selected Inspection Reports

None

Total	**$50.00**

Project Name: ET241438B
Engineering Services 3525
Baseline Rd Georgina ON
Project #: 24091200258
P.O. #: ET241438B

Excluded Fire Insurance Plans and Inspection Reports

Requested by:
Eleanor Goolab
Date Completed: 09/18/2024 13:27:18

OPTA INFORMATION INTELLIGENCE

Excluded Fire Insurance Plans

None

Excluded Inspection Reports

None

Appendix C

MECP Correspondence

Ministry of the Environment, Conservation and Parks

Corporate Services Branch
40 St. Clair Avenue West
Toronto ON M4V 1M2

Ministère de l'Environnement, de la Protection de la nature et des Parcs

Direction des services ministériels
40, avenue St. Clair Ouest
Toronto ON M4V 1M2

Ontario

March 11, 2025

Sandeep Kaur
Engtec Consulting Inc.
2447 Anson Drive
Mississauga, Ontario L5S 1G1
Sandeep.kaur@engtec.ca

Dear Sandeep Kaur:

RE: MECP FOI A-2024-06067 – Record Release Letter

This letter is further to your request made pursuant to the Freedom of Information and Protection of Privacy Act (the Act) relating to 3525 Baseline Rd, Sutton West, Georgina.

Attached is a copy of the records.

You may request a review of my decision within 30 days from the date of this letter by contacting the Information and Privacy Commissioner/Ontario at http://www.ipc.on.ca. Please note there may be a fee associated with submitting the appeal.

If you have any questions regarding this matter, contact Tara Hachey at tara.hachey@ontario.ca.

Yours truly,

Tara Hachey

For:

Josephine DeSouza
Manager, Access, and Privacy Office

Attachment

Hazardous Waste Information

These are historical waste records from the Hazardous Waste Infomation Network (HWIN) and System (HWIS), and paper manifests when available, operated by the Ontario Ministry of the Environment. As of January 1, 2023, Resource Productivity and Recovery Authority's (RPRA) Hazardous Waste Program Registry and HazTrack mobile app replace HWIN and the use of paper manifests.

Generator Details (HWIN)

Registration/Notification Number
ON6695973

Legal Company Name

Primary Name:	The Regional Municipality of York	Division Name:	Transportation and Transit

Company Operating Name

Primary Name:	The Regional Municipality of York	Division Name:	Roads Transportation

Mailing Address

Division Building:	N/A	P.O. Box:	147
Address Line 1:	17250 Yonge Street	Address Line 2:	N/A
Town/City:	Newmarket	Postal/Zip Code:	L3Y 6Z1
County (if in ON):	YORK (R. M.)	Province/State (if in CAN/US):	ONTARIO
County (if outside ON):	N/A	Province/State (if outside CAN/US):	N/A

Site Location

Division Building:	N/A	P.O. Box:	N/A
Address Line 1:	North District Maintenance Depot	Address Line 2:	3525 Baseline Road
Town/City:	Georgina	Postal/Zip Code:	L0E 1R0
County (if in ON):	YORK (R. M.)	Province/State (if in CAN/US):	ONTARIO
County (if outside ON):	N/A	Province/State (if outside CAN/US):	N/A

Inactive Waste Classes (ON6695973)

No inactive waste listings.

Active Waste Classes (ON6695973)

Active Off-Site Waste Classes

Waste Class	Hazardous Waste Number (per waste stream)	Reg.347 Schedules	Disposal Method	Part 2B required	Part 2B complete	Phsyical State	Off-Site	Status
148 - L	N/A					Liquid	Off-Site	Active
212 - L	N/A					Liquid	Off-Site	Active
213 - I	D001	5, 13	Potential Land Disposal	Y	Y	Liquid	Off-Site	Active
221 - I	D001	5, 13	Potential Land Disposal	Y	Y	Liquid	Off-Site	Active
251 - L	N/A					Liquid	Off-Site	Active
252 - L	N/A					Liquid	Off-Site	Active
263 - I	D001	5, 13	Potential Land Disposal	Y	Y	Liquid	Off-Site	Active

Ministry of the Environment
Sector Compliance Branch
305 Milner Ave, Suite 1000
Scarborough, ON M1B 3V4
Tel.: 416-314-4278
Fax.: 416-314-4464

...istère de l'Environnement
Direction de la mise en conformité des secteurs
305, avenue Milner, bureau 1000
Scarborough, ON M1B 3V4
Tél.: 416-314-4278
Téléc.: 416-314-4464

Ontario

November 21, 2018

ONIT Construction Inc.
13826 Heritage Road
Caledon, ON L7C 1T5

Re: Construction Site Inspection at "York Region's North District Road Salt Dome" located at 3525 Baseline Road, Sutton West

Dear Mr. Campos:

On October 30, 2018, I attended the above noted address for the purpose of conducting an inspection to determine compliance with Ontario Regulations 102/94 and 103/94. I briefly met Mr. Bo Hwang of Terraprobe Consulting Engineers and Mr. Mico Eskenazi, Site Superintendent and discussed the requirements of the Regulations. On October 31, 2018, I had a phone conversation with you and discussed the purpose of the inspection. From this conversation, it is my understanding that the construction project has a total floor area of 1,533 square metres and is therefore not subject to the requirements of Ontario Regulation 102/94 *(Waste Audits and Waste Reduction Work Plans)* and Ontario Regulation 103/94 (*Industrial, Commercial and Institutional Source Separation Programs*).

Please be advised that all Large Construction Projects that have a total floor area of at least 2,000 square metres must comply with Ontario Regulations 102/94 and 103/94.

To be in compliance with Ontario Regulations 102/94 and 103/94, the builder must complete the following before construction work begins at the site:

1. A Waste Audit covering the waste generated at the construction site must be conducted;
2. A Report of the Waste Audit must be completed;
3. A written Waste Reduction Work Plan must be completed;
4. The Waste Reduction Work Plan must be implemented; and
5. A Source Separation Program must be implemented.

I have enclosed links to the relevant guidance documents and web-based resources to assist you. If after reviewing these materials you have any questions, please contact me for assistance at Tel: 416-212-6666; Toll free: 1-866-482-9967; Fax: 416-314-4464 or by email at Annamae.Dominguez@ontario.ca.

Sincerely,

Anna Mae M. Dominguez
Provincial Officer # 1564
Environmental Enforcement and Compliance Office
Ministry of the Environment, Conservation and Parks

MINISTRY OF ENVIRONMENT, CONSERVATION AND PARKS
WEB BASED REFERENCE MATERIAL

General Information about Ministry Programs:

Ministry of the Environment Website
http://www.ontario.ca/government/about-ministry-environment

Links to Guides and Forms:

Each of the Guidance documents is available for download at the following links:

Publication Number	Document Name and Link
2481e01	**"A Guide to Waste Audits and Waste Reduction Work Plans for Construction & Demolition Projects** http://www.ontario.ca/environment-and-energy/guide-waste-audits-and-waste-reduction-work-plans-construction-demolition
2478e01	**"A Guide to source Separation of Recyclable Materials for Industrial, Commercial and Institutional Sectors and Multi-Unit Residential Buildings"** http://www.ontario.ca/environment-and-energy/guide-source-separation-recyclable-materials-industrial-commercial-and

Links to 3R's Regulations:

You may view all Ontario legislation (including the 3R's regulations) in their entirety by accessing the government's e-laws web site at:
www.e-laws.gov.on.ca

Or you may link directly to the regulations using the following web addresses:

Ontario Regulation 102/94
http://www.e-laws.gov.on.ca/html/regs/english/elaws_regs_940102_e.htm

Ontario Regulation 103/94
http://www.e-laws.gov.on.ca/html/regs/english/elaws_regs_940103_e.htm

In addition, please see below the web links to the guide and RSC fact sheet, and record of site condition search:

Management of Excess Soil – A Guide for Best Management Practices:
https://www.ontario.ca/environment-and-energy/management-excess-soil-guide-best-management-practices

Bringing soil to a Record of Site Condition property fact sheet:
https://www.ontario.ca/environment-and-energy/bringing-soil-record-site-condition-property

Ontario

Ministry of the Environment, Conservation and Parks

Sector Compliance Branch

INSPECTION REPORT

York Region's North District Road Salt Dome
3525 Baseline Rd
Georgina, ON, L0E 1R0
District Office: York-Durham

Inspection Completion Date: Oct 30, 2018

Company Information

Company Identification

Company Name:
ONIT Construction Inc.

Business Identification Number:

Business Name:

Main Phone Number:
9057937011

Main Fax Number:
9057395150

Email Address:
ramon@onitconstruction.com

Company Address

Street Address, Unit Identifier:
70 Delta Park Blvd Unit 4

District Office
Halton-Peel

Municipality Type:
Brampton (City)

County/District:
Peel Regional Municipality

Province:
ON

Postal Code:
L6T 5E9

Company Mailing Address

Same As Company: No

Street Address, Unit Identifier:
13826 Heritage Road

City:
Caledon

Province/State:
ON

Postal Code:
L7C 1T5

Country:
Canada

Inspection Information

Inspection Report: 1-T5E6Y **Pass/Fail:** N/A

Incident Report Reference Number (IRRN): 7416-B6NQD2

Inspection Report Summary

On October 30, 2018, Provincial Officer Anna Mae M. Dominguez (#1564) of the Environmental Enforcement and Compliance Office- Ministry of the Environment, Conservation and Parks conducted an inspection of a construction site located at 3235 Baseline Road, Sutton West ON L0E 1R0. The purpose of the inspection was to assess compliance with Ontario Regulations 102/94 (O. Reg. 102/94) and 103/94 (O. Reg. 103/94) of the Environmental Protection Act.

O. Reg. 102/94 requires a builder of a construction project consisting of the construction of one or more buildings with a total floor area of at least 2,000 square metres to conduct a Waste Audit (WA) and prepare a written Report, prepare and implement a Waste Reduction Work Plan (WRWP) and post the WRWP before construction work begins.

O. Reg. 103/94 requires a builder of a construction project consisting of the construction of one or more buildings with a total floor area of at least 2,000 square metres to implement a Source Separation Program for the following recyclable materials for the purpose of reuse or recycling: brick/concrete, cardboard, drywall, steel and wood.

The Officer met briefly with Mr. Bo Hwang of Terraprobe Consulting Engineers and Mr. Mico Eskenazi, Site Superintendent. According to Mr. Eskenazi, the Salt Storage Dome project is being undertaken by ONIT Construction Inc.

At the time of the inspection, construction has not commenced. Mr. Hwang was on site collecting soil samples for testing to confirm the bearing capacity of the soil.

On October 31, 2018, the Officer spoke with Mr. Ramon Campos, Project Manager. He has indicated that the construction project size is about 1,533 square metres (16,501 square feet). Subsequently, he has provided the Certificate of Design and Manufacturing Conformance document for confirmation. The construction project is under the legislative threshold of 2,000 square metres. Hence, it was determined that it is not subject to the requirements of the Regulations at this time.

Officer Dominguez issued a future reference letter to ONIT Construction Inc., advising them of the requirements for large constructions projects to ensure compliance with O. Regulations 102/94 and 103/94.

No further action required. File to be closed.

Please refer to Field Inspection Observations section of this Inspection Report for more details.

Site Information

Site Identification

Site Name:
York Region's North District Road Salt Dome

District Office:
York-Durham

Contact Name:

Contact Phone:

Site Address

Street Address, Unit Identifier:
3525 Baseline Rd

Municipality Type:
Georgina (Town)

County/District:
York Regional Municipality

Province:
ON

Postal Code:
L0E 1R0

Site Mailing Address

Same As Site Address: No

Street Address, Unit Identifier:
3525 Baseline Rd

City:
Sutton West

Province/State:
ON

Postal Code:

Country:
Canada

Inspection Team

Inspection Role	Officer Name	Officer Badge Number
Primary Officer	Anna Mae Dominguez	1564
Supervisor	Tricia Young	1402

Field Inspection Observations

Checklist Name: EPA - General Questions - Construction

Observation: Was there any indication of a known or anticipated human health impact during the inspection and/or review of relevant material, related to this Ministry's mandate?

Observation Type: Impact Response: No

Comments/Findings: There was no indication of a known or anticipated human health impact during the inspection and/or review of relevant material, related to this Ministry's mandate.

Observation: Was there any indication of a known or anticipated environmental impact during the inspection and/or review of relevant material?

Observation Type: Impact Response: No

Comments/Findings: There was no indication of a known or anticipated environmental impact during the inspection and/or review of relevant material.

Observation: Was there any indication of a known or suspected violation of a legal requirement during the inspection and/or review of relevant material which could cause a human health impact or environmental impairment?

Observation Type: Impact Response: No

Comments/Findings: There was no indication of a known or suspected violation of a legal requirement during the inspection and/or review of relevant material which could cause a human health impact or environmental impairment.

Observation: Was there any indication of a potential for a human health impact or environmental impairment during the inspection and/or the review of relevant material?

Observation Type: Impact Response: No

Comments/Findings: There was no indication of a potential for a human health impact or environmental impairment during the inspection and/or the review of relevant material.

This Inspection Report does not in any way suggest that there is or has been compliance with all applicable legislation and regulations as they may apply to this facility. It is, and remains, the responsibility of the owner and/or the operating authority to ensure compliance with all applicable legislative and regulatory requirements.

Sign-Off

Primary Officer	**Anna Mae Dominguez**	**Badge Number**	**1564**
Date	11/21/2018		
Signature	AMDominguez		

Dominguez, Anna Mae (MECP)

From:	Ramon Campos <Ramon@onitconstruction.com>
Sent:	October-31-18 11:38 AM
To:	Dominguez, Anna Mae (MECP)
Subject:	RE: Waste Audit and Waste Reduction Work Plan and Source Separation Program Guidelines and Forms
Attachments:	STRUCTURALS-ONIT-1.pdf; Foundation-ONIT rev1.pdf

Good morning, Anna
Thank you for your visit yesterday to our construction site, I hope you found everything in order and compliance. Thank you also for the information provided.
Following to our telephone conversation, please find attached for your consideration the drawings for the building design. The total surface of the construction is **24.89 m x 61.62 m = 1,533.72 m2**
Should you need any additional information or details please let me know.
Kind regards,

Ramon Campos

ONIT Construction Inc.
WWW.ONITCONSTRUCTION.COM

14 Automatic Road, Unit 32
Brampton, ON L6S SN5
Office: (905) 793-7011
Fax: (905) 793-5150
Cell: (416) 948-5458
ramon@onitconstruction.com

From: Dominguez, Anna Mae (MECP) <AnnaMae.Dominguez@ontario.ca>
Sent: October 31, 2018 11:33 AM
To: Ramon Campos <Ramon@onitconstruction.com>
Subject: Waste Audit and Waste Reduction Work Plan and Source Separation Program Guidelines and Forms

Hello Mr. Campos,

As discussed, please find attached the Waste Audit and Waste Reduction Work Plan completed sample and blank forms. Also attached are the Waste Audit and Waste Reduction Work Plan and Source Separation Program Guidelines for your reference.

Links to 3R's Regulations:

You may view all Ontario legislation (including the 3R's regulations) in their entirety by accessing the government's e-laws web site at:
www.e-laws.gov.on.ca

Or you may link directly to the regulations using the following web addresses:

Ontario Regulation 102/94
http://www.e-laws.gov.on.ca/html/regs/english/elaws_regs_940102_e.htm

Ontario Regulation 103/94
http://www.e-laws.gov.on.ca/html/regs/english/elaws_regs_940103_e.htm

Please do not hesitate to contact me if you have any questions or concerns.

Thank you,

Anna Mae M. Dominguez
Provincial Officer #1564
Environmental Enforcement and Compliance Office
Ministry of the Environment Conservation and Parks
305 Milner Avenue, Suite 1000
Scarborough, ON M1B 3V4
: 1-416-212-6666
: 1-416-314-4464
: Annamae.Dominguez@Ontario.ca

© Canadian Standards Association — Certification of manufacturers of steel building systems

CERTIFICATE OF DESIGN AND MANUFACTURING CONFORMANCE

THIS CERTIFICATE IS TO AFFIRM THAT ALL COMPONENTS OF THE STEEL BUILDING SYSTEM DESCRIBED BELOW, TO BE SUPPLIED BY THE NAMED MANUFACTURER CERTIFIED IN ACCORDANCE WITH CSA A660, HAVE BEEN OR WILL BE DESIGNED AND FABRICATED IN ACCORDANCE WITH THE FOLLOWING STANDARDS TO CARRY THE LOADS AND LOAD COMBINATIONS SPECIFIED.

1. DESCRIPTION

MANUFACTURER'S NAME AND ADDRESS:	BRITESPAN BUILDING SYSTEMS INC.
MANUFACTURER'S CERTIFICATE NO. UNDER CSA A660:	OLYMPO
CUSTOMER ORDER NUMBER:	BRITESPAN SO# 6273-01
BUILDING TYPE AND SIZE:	ATLAS 24 - 72' WIDE X 192' LONG, 12' TRUSS SPACING
INTENDED USE AND OCCUPANCY:	SALT / SAND STORAGE (COMMERCIAL)
IMPORTANCE CATEGORY (NBCC, SENTENCE 4.1.2.1(3)):	0.8, LOW
SITE LOCATION:	3525 BASELINE ROAD, SUTTON, ON. L0E 1R0
APPLICABLE BUILDING CODE:	OBC 2012 & NBCC 2010 AS OUTLINED BELOW
BUILDER'S NAME AND ADDRESS:	BBS ONTARIO 688 JOSEPHINE STREET NORTH, R.R.#1 WINGHAM, ON. N0G 2W0
OWNER'S NAME AND ADDRESS:	REGIONAL MUNICIPALITY OF YORK 3526 BASELINE ROAD SUTTON, ON. L0E 1R0
	ENGINEER'S INITIALS* M.L.

2. DESIGN STANDARDS

NATIONAL BUILDING CODE OF CANADA, 2010, PART 4: STRUCTURAL DESIGN

CSA S16-09, DESIGN OF STEEL STRUCTURES

CSA S136-07, NORTH AMERICAN SPECIFICATION FOR THE DESIGN OF COLD-FORMED STEEL STRUCTURAL MEMBERS

OTHER (SPECIFY) OBC 2012 CONTAINING O.REG 332/12

EFFECTIVE DATE: JANUARY 1, 2014

3. MANUFACTURING STANDARDS

(A) FABRICATION HAS BEEN OR WILL BE IN ACCORDANCE WITH CSA S16 AND CSA S136, AS APPLICABLE.

(B) WELDING HAS BEEN OR WILL BE PERFORMED IN ACCORDANCE WITH CSA W59 AND CSA S1 36, AS APPLICABLE.

(C) THE MANUFACTURER HAS BEEN CERTIFIED IN ACCORDANCE WITH CSA W47.1, FOR DIVISION 1 OR 2, AND/OR CSA W55.3, IF APPLICABLE.

(D) WELDERS HAVE BEEN QUALIFIED IN ACCORDANCE WITH CSA W47.1.

4. PURLIN STABILITY

PURLIN BRACES ARE PROVIDED IN ACCORDANCE WITH CSA S136, CLAUSE D3 AND APPENDIX B, CLAUSE D3.2.3. IN PARTICULAR, FOR A STANDING SEAM ROOF SUPPORTED ON MOVABLE CLIPS, BRACES PROVIDING LATERAL SUPPORT TO BOTH TOP AND BOTTOM PURLIN FLANGES HAVE BEEN OR WILL BE PROVIDED. THE NUMBER OF ROWS IS DETERMINED BY ANALYSIS BUT IN NO CASE IS IT LESS THAN 1 FOR SPANS UP TO 7 M INCLUSIVE OR LESS THAN 2 FOR SPANS GREATER THAN 7 M.

5. LOADS

(A) SNOW, ICE, AND RAIN LOAD

1-50 YEAR GROUND SNOW LOAD, Ss =	2.3 (kPa)
1-50 YEAR ASSOCIATED RAIN LOAD, Sr =	0.4 (kPa)
IMPORTANCE FACTOR, Is =	0.8

BASIC ROOF SNOW LOAD FACTOR: Cb = 0.8; Cs = 1 (CASE 2 FOR UNBALANCED LOADING)

ROOF SNOW LOAD, S = VARIES DUE TO PROFILE.

DRIFT LOAD CONSIDERED (NBCC, SUB-SECTION 4.1.5.2.B). REFER TO DRAWING OF SPECIFIC BUILDING.

SPECIFIED RAIN LOAD (NBCC, CLAUSE 4.1.6.4)

(B) FULL AND PARTIAL SNOW LOAD

(i) APPLIED ON ANY ONE AND ANY TWO ADJACENT SPANS OF CONTINUOUS PURLINS

(ii) APPLIED ON ANY ONE AND ANY TWO ADJACENT SPANS OF MODULAR RIGID FRAMES WITH CONTINUOUS ROOF BEAMS

(iii) APPLIED AS DESCRIBED FOR THE BUILDING GEOMETRY IN NBCC, PART 4, AND IN THE USER'S GUIDE- NBCC 2010: STRUCTURAL COMMENTARIES (PART 4), COMMENTARY G: SNOW LOADS

(C) WIND LOAD

1-50 YEAR REFERENCE VELOCITY PRESSURE:	0.38 (kPa)
IMPORTANCE FACTOR, Iw =	0.8
EXPOSURE, Ce =	0.90
ENCLOSURE =	ENCLOSED

(D) WIND LOAD APPLICATION

(i) APPLIED IN ACCORDANCE WITH NBCC, PART 4, SECTION 4.1.7

(ii) PRESSURE COEFFICIENTS IN ACCORDANCE WITH USER'S GUIDE- NBCC 2010: STRUCTURAL COMMENTARIES (PART 4), COMMENTARY 1: WIND LOADS, FIGURES 13 THROUGH 112

(iii) BUILDING INTERNAL PRESSURE CATEGORY IN ACCORDANCE WITH USER'S GUIDE- NBCC 2010: STRUCTURAL COMMENTARIES (PART 4), COMMENTARY 1: WIND LOADS

(E) CRANE LOADS (WHERE APPLICABLE) —— N/A

(F) MEZZANINE LIVE LOAD —— N/A

(G) SEISMIC LOAD —— N/A

(H) OTHER LIVE LOADS (SPECIFY) —— 0.8 kPa (MINIMUM ROOF LIVE LOAD)

(I) DEAD LOADS

DEAD LOAD OF BUILDING COMPONENTS IS INCORPORATED IN THE DESIGN AS SELF-WEIGHT OF THE BUILDING

COLLATERAL LOAD (MECHANICAL, ELECTRICAL, CEILING, SPRINKLERS, ETC.) = 0.812kPa

(J) LOAD COMBINATIONS

APPLIED IN ACCORDANCE WITH NBCC, PART 4, SECTION 4.1: YES

6. GENERAL REVIEW DURING CONSTRUCTION

THE MANUFACTURER DOES NOT PROVIDE GENERAL REVIEW DURING CONSTRUCTION FOR REGULATORY PURPOSES.

7. CERTIFICATION BY ENGINEER

I, MARTIN NICOLAU, AN ENGINEER REGISTERED OR LICENSED TO PRACTICE IN THE PROVINCE OR TERRITORY OF ONTARIO, HEREBY CERTIFY THAT I HAVE REVIEWED THE DESIGN AND MANUFACTURING PROCESS FOR THE STEEL BUILDING SYSTEM DESCRIBED. I CERTIFY THAT THE FOREGOING STATEMENTS, INITIALED BY ME, ARE TRUE.

BRITESPAN BUILDING SYSTEMS INC

TF: 800-407-5846
www.britespanbuildings.com

REV:	DESCRIPTION:	DATE:
1	ISSUED FOR REVIEW	12.SEP.2016

DEALER:
BBS ONTARIO
688 JOSEPHINE STREET NORTH, R.R.#1
WINGHAM, ON. N0G 2W0

CUSTOMER:
REGIONAL MUNICIPALITY OF YORK
3525 BASELINE ROAD
SUTTON, ON. L0E 1R0

LICENSED PROFESSIONAL ENGINEER
M. S. NICOLAU
9.13.2016
PROVINCE OF ONTARIO

THIS DRAWING IS PROPERTY OF BRITESPAN BUILDING SYSTEMS INC., ANY REPRODUCTION IN WHOLE OR IN PART WITHOUT THE EXPRESSED WRITTEN CONSENT OF BRITESPAN BUILDING SYSTEMS INC. IS PROHIBITED. THIS DRAWING IS NOT TO SCALE UNLESS OTHERWISE NOTED.

DRAWN BY: JLK
CHECKED BY: CJM

PROJECT:
ATLAS 24
72'L10 x 192' - 420 GM
12' O.C.

ORDER ID: SO# 6273-01
WIDTH-STEEL FAB-HSS-HSSOROP: 72-420-220-18-9.5

DRAWING TITLE: CERT. OF CONFORMANCE
SHEET NO.: CT-1
PAGE NO.: 001 / 14

REVIEWED
By OWT Construction at 2:30 pm, Sep 20, 2016

This project has been designed and fabricated in accordance with the following:

1. DESCRIPTION

Customer's Name and Address:	REGIONAL MUNICIPALITY OF YORK 3525 BASELINE ROAD SUTTON, ON L0E 1R0
Site Location:	REGIONAL MUNICIPALITY OF YORK 3525 BASELINE ROAD SUTTON, ON L0E 1R0
Building Type	ATLAS 24
Building Size:	72' X 192' @ 12' O.C. (21.95m X 58.52m @ 3.66m O.C.)
Applicable Building Code:	NBCC 2010 & OBC 2012
Intended Use and Occupancy:	SALT / SAND STORAGE
Construction Type:	COMMERCIAL
Fabric Type	RUBSX-8 (FR) 400

2. DESIGN CRITERIA

Importance Category	0.8 Low
Occupancy Classification:	F3

A) DEAD LOADS

i) Selfweight of building components

ii) Collateral (hanging) load, not to exceed 0.25 psf (0.012 kPa) as an allowance for mechanical, electrical ceiling, sprinklers, etc, or any combination there of.

B) LIVE LOADS

Live loads determined in accordance with section 4.1.5 of NBCC 2010

Minimum roof live load	18.72 psf (0.9 kPa)

C) SNOW LOADS

Snow loads determined in accordance with section 4.1.6 of NBCC 2010 & Commentary G of NBCC 2010

Structural Commentaries

Importance Factor, Is	0.8
Ground Snow Load, Ss	48.8 psf (2.3 kPa)
Associated Rain Load, Sr	8.4 psf (0.4 kPa)
Building Exposure	EXPOSED (Cw = 0.75)

D) WIND LOADS

Wind Loads determined in accordance with section 4.1.7 of NBCC 2010 & Commentary I of NBCC 2010

Structural Commentaries

Importance Factors, Iw	0.8
Reference Wind Pressure, q (1/50)	7.9 psf (0.38 kPa)
Exposure Factor, Ce	0.98
Building Enclosure	ENCLOSED (ALL OPENINGS MUST BE RATED FOR SITE LOADS)

E) LOAD COMBINATIONS

Load combinations determined in accordance with section 4.1.3 of NBCC & Commentary A of the NBCC 2010 Structural Commentaries

3. BASE REACTIONS (UNFACTORED)

THE MAXIMUM FORCES AT THE FOUNDATION HINGE SUPPORTS, DUE TO THE LOADS LISTED ABOVE, ARE AS FOLLOWS:

	SIDE A				SIDE B			
	HORIZONTAL		VERTICAL		HORIZONTAL		VERTICAL	
LOAD CASE:	X_A (kips)	X_A (kN)	Y_A (kips)	Y_A (kN)	X_B (kips)	X_B (kN)	Y_B (kips)	Y_B (kN)
DEAD	0.31	1.37	0.72	3.20	-0.31	-1.37	0.72	3.20
LIVE	4.81	21.41	8.85	39.38	-4.81	-21.41	8.85	39.38
SNOW BALANCED	5.18	23.05	7.67	34.11	-5.18	-23.05	7.67	34.11
SNOW UNBALANCED	2.79	12.42	2.48	11.04	-2.79	-12.42	6.53	29.07
WIND: PERPENDICULAR	-0.12	-0.52	4.53	20.17	-2.19	-9.74	4.22	18.77
WIND:PARALLEL	-1.68	-7.49	-6.49	-28.86	1.59	7.08	-6.51	-28.96

Note:

Negative values of Y reactions indicates uplift forces.

4. MATERIAL SPECIFICATIONS

(a) Structural Steel

All steel shall be designed, fabricated & erected in conformance to CAN/CSA-S16-09 "Limit states design of steel structures"

Structural steel conforms to:

Plate	ASTM A572 GR 42 I bs & CSA G40.20 300W / 350W
Rolled & HSS sections	ASTM A500 GRADE C / CSA G40.21 350W
Purlins	ABTM A500 GRADE C

COMPONENTS ARE

2.875" (73mm) DIA. X 10GA. (OUTER) & 7GA. (INNER IN HEAVY TRUSS) TUBULAR TRUSS CHORDS @ 24" (609.6mm) O.C. W/ 1.25" (31.8mm) DIA. X 14GA. WEBS AND 2.875" (73mm) DIA. X 14GA. PURLINS

Structural steel round and square tubing, hot or cold formed and induction welded. Mill certs or test results are available from manufacturer to confirm the physical characteristics and composition of the supplied steel.

(b) Corrosion Protection

Product	Galvanizing Standard	Type	Coating Weight	Coating Thickness
Steel tube	CAN/CSA-G124	in-line	1.8 oz/ft²	1.9 mils *
Steel tube, plate & HSS	ASTM A123	hot dip	2.2 oz/ft²	3.4 mils
Cables	Federal spec. RR-W410D			

* Chromate conversion coating applied over the galvanized surface coat demonstrating the ability to withstand a minimum of 1000 hours of accelerated salt fog testing to the 5% red rust condition in accordance with ASTM B117. The repair to the truss at weld locations is composed using sprayed zinc (metallizing) in accordance with ASTM A 780 - 01. Surfaces to be reconditioned shall be blasted clean, dry and free of oil, grease, corrosion, flux residue and weld spatter in accordance with SSPC-SP5/NACE No. 1 to ensure that a smooth reconditioned coating can be completed. Surface preparation shall be extended into the surrounding undamaged galvanized coating. Field touch ups to damaged galvanizing protection is completed using 99.9% zinc rich spray paint

(c) Bolts

Anchor bolt lengths and load transfer to the foundation are to be determined by others. Anchor bolt diameters are determined in accordance with CAN/CSA-S16-09 using FY = 36 Ksi (248 MPa). Anchor bolt projections (based on no grout) are Min. 2" (50.8mm) and Max 3 1/2" (88.9mm). All structural bolt diameters less than 1" (25.4mm) conform to SAE J429 GR.5., be plated / galvanized or J8500 coated finish. All structural nut diameters less than 1" (25.4mm) conform to SAE J995 GR.5., be plated / galvanized or J8500 coated finish. All bolts larger than 1" (25.4mm) dia conform to ASTM A325. Bolts in connections not subject to tension loads, or where loosening due to vibration or load fluctuations are not design considerations need only be snug tightened to a tightness that exists when all plies in a joint are in firm contact. Bolts subject to tension loads require pre-tensioning to minimum values shown in following table

TABLE 4.1

BOLT LENGTH (MEASURED FROM UNDERSIDE OF THE HEAD TO THE EXTREME END OF THE BOLT)	TURN
UP TO AND INCLUDING 4 BOLT DIAMETERS	1/3
OVER 4 DIAMETERS AND NOT EXCEEDING 8 DIAMETERS OR 8 INCHES	1/2
EXCEEDING 8 DIAMETERS OR 8 INCHES	2/3

NOTE: NUT ROTATION IS ROTATION RELATIVE TO A BOLT REGARDLESS WHETHER THE NUT OR BOLT IS TURNED. TOLERANCE ON ROTATION: 30° OR UNDER

(d) CABLES

DIAGONAL STEEL CABLES AS PER FEDERAL SPEC. RR-W410D

DIAMETER INCHES	APPROX. WEIGHT PER 1000 FT. (LBS)	BREAK STRENGTH TONS (lb)
3/16 (4.8mm)	66 (29.9 kg)	2.1 (1905.1 kg)
5/16 (7.9mm)	172 (78.0 kg)	4.8 (4485.1 kg)
1/2 (12.7mm)	521 (236.3 kg)	8.8 (8164.8 kg)

SHACKLES, TURNBUCKLES AND PINS TO BE GRADE 100-110 STEEL

(e) Membrane Fabric

All membrane will meet at a minimum the following:

Product	Properties	Description
WEAVE	WOVEN CLEAR HDPE SCRIM	HIGH DENSITY POLYETHYLENE
COATING	4 mil (96 g/m²/side) LDPE	LOW DENSITY POLYETHYLENE
WEIGHT	12 oz/ yd² (407 g/m²) +/-5%	
THICKNESS	23 mil (0.58 mm)	ASTM D1777
GRAB TENSILE	WARP 370 lb 1664 N	ASTM D5034
	WEFT 345 lb 1532 N	ASTM D5034
STRIP TENSILE (N/5cm)	WARP 260 lb/in (2220)	ASTM D5035
	WEFT 235 lb/in (2066)	ASTM D5035
TONGUE TEAR	WARP 118 lb 488 N	ASTM D2261
	WEFT 100 lb 400 N	ASTM D2261
TRAPEZOIDAL TEAR	WARP 100 lb 444 N	ASTM D4533
	WEFT 90 lb 400 N	ASTM D4533
MULLEN BURST	650 psi (4428 kPa)	ASTM D3786
LOW TEMPERATURE BEND	XABS -76°F/-60°C	ASTM D2136
FR PERFORMANCE	RUBSX-8 400	ASTM E84-16
	RUBSX-8 (FR) 400	NFPA 701-2015, NFPA 701 (1999), CAN/ULC S109-14, ASTM E84-18

5. BUILDING ERECTION

The builder and/ or erector is solely responsible for accurate, good quality workmanship in erecting this building in conformance with these drawings, details referenced in these drawings and industry standards as per CSA S16-09, pertaining to proper erection including the proper use of temporary bracing. BRITESPAN Building Systems, Inc. is not responsible for errors, omissions or damages incurred in the erection of the components shown on this drawing, or for the inspection of erected components to determine same. The erector must provide safe working conditions and practices conforming to safety regulations. All lifting devices are to be specifically designed to lift the various components. Slings and spreader bars are to be used to prevent permanent deformation of structural components. This building is not designed to be lifted as an assembled unit. BRITESPAN Building Systems, Inc is not responsible for losses and/or damage as a result of lifting this building. If, however, it has been determined to lift this building it is the responsibility of the person, firm, or company contracted to lift the building to ensure the lift does not damage the building and to determine and finalize all aspects of the lift including all parts/connectors to be added to the building to facilitate the lift. Foundation must be level, square and smooth.

(a) Structural Steel

Assemble frames from truss components, then starting at a braced bay, erect and support frames using temporary bracing as required to ensure stability of the frames. Install purlins and cross bracing. Plumb and square frames in accordance with CAN/CSA-S16 and OSHA 29 CFR PART 1926 - Safety Standard for Steel Erection. Structural frames are considered plumb, level and aligned when the variance does not exceed 1:500. Ensure all purlins remain parallel. Purlins are not designed to carry additional hanging loads. Loads hung from purlins must be reviewed and approved in writing by BRITESPAN Building Systems, Inc. Severe damage to the building and accessories may result from failure to comply with this requirement. Finished floor elevations and underside of base plate is 100'-0" (30.48 m) unless noted. Holes required in HSS columns, headers or purlins for framed openings, door or window post connections to be by the erector. All gable entry framed opening posts to be attached to the foundation.

(b) Membrane Fabric

Membrane covers are not to be pulled onto the frame in high wind conditions. Membrane is to be installed using appropriate procedures and practices as set out in the applicable series installation manual. Exterior fabric will deflect under load, therefore all building accessories (lighting, HVAC, Sprinklers etc.) must be located beneath the inner chord of the truss. Anything above this must be reviewed and approved in writing by BRITESPAN Building Systems, Inc. Severe damage to the building and accessories may result from failure to comply with this requirement.

(c) Delivery and Storage

BRITESPAN Building Systems, Inc. will not be held responsible for materials which are improperly protected after delivery. Galvanized, aluminum and colored materials are subject to corrosion and discoloration if they are improperly stored. Short term job site storage of components may be tolerated, provided care is taken to keep the materials dry at all times. When trusses are to be stored outdoors, they should be placed at an angle sufficient to promote good drainage. In addition, several inches of clearance must be provided between the lower end and the ground to allow ventilation.

(d) Interior Partition Walls

Field installation of partition walls to the underside of the truss frame member must allow for vertical building deflection. Contact BRITESPAN Building Systems, Inc. for required clearances.

6. MISCELLANEOUS

(a) Purlin braces are an integral part of the truss structural system and should be properly installed prior to installation of membrane roof or endwall panels. Removal or alteration of any bracing without authorization from BRITESPAN Building Systems, Inc. is prohibited.

(b) BRITESPAN Building Systems, Inc. does not provide review during construction without prior COMMITMENT TO REVIEW authorization.

7. CERTIFICATION BY BRITESPAN BUILDING SYSTEMS, INC.

This certification and engineering seal applies only to products designed by BRITESPAN Building Systems, Inc. for the loading conditions designated on these drawings. Concrete, foundations, anchor bolts, components BY OTHERS and erection are NOT the responsibility of BRITESPAN Building Systems, Inc. All doors, windows and roll-up curtains must be designed by others to support the site loading conditions and are relied upon to be closed in the event of high wind.

These drawings including information herein, remains the property of BRITESPAN Building Systems, Inc. They are provided solely for erecting the building described, and shall not be modified, reproduced or used for any other purpose without prior written approval of BRITESPAN Building Systems, Inc.

*** MAINTENANCE REQUIREMENTS FOR THE STRUCTURE ***

Years 1 - 2 every 12 months - 100% of all cable tensioning inspected and reported to in writing to BRITESPAN and Engineer of structure.

Years 3 - 10 every 24 months - 25% of all cable tensioning (randomly chosen) - where tensioning found not adequate, check all other similar cable tensioning, report in writing to BRITESPAN and Engineer of structure.

Every major wind loading event exceeding 75% of the design wind load - 25% of all cable tensioning (randomly chosen) - where tensioning found not adequate, check all other similar tensioning, report in writing to BRITESPAN and Engineer of structure

*** NOTE ***

TEMPORARY BRACING/ SUPPORTS REQUIRED DURING ERECTION OF BUILDING. BRACING MUST REMAIN IN PLACE UNTIL STRUCTURE AND ALL PERMANENT BRACING IS COMPLETELY INSTALLED.

TEMPORARY BRACING DESIGN AND SUPPLY IS NOT THE RESPONSIBILITY OF BRITESPAN BUILDING SYSTEMS INC.

BRITESPAN BUILDING SYSTEMS INC

TF: 800-407-5646
www.britespanbuildings.com

THIS DRAWING IS PROPERTY OF BRITESPAN BUILDING SYSTEMS INC.. ANY REPRODUCTION IN WHOLE OR IN PART WITHOUT THE EXPRESSED WRITTEN CONSENT OF BRITESPAN BUILDING SYSTEMS INC. IS PROHIBITED. THIS DRAWING IS NOT TO SCALE UNLESS OTHERWISE NOTED.

DRAWN BY: JLK

CHECKED BY: CJM

REV:	DESCRIPTION:	DATE:
1	ISSUED FOR REVIEW	12.SEP.2018

DEALER:
BBS ONTARIO
688 JOSEPHINE STREET NORTH, R.R.#1
WINGHAM, ON. N0G 2W0

CUSTOMER:
REGIONAL MUNICIPALITY OF YORK
3525 BASELINE ROAD
SUTTON, ON. L0E 1R0

PROJECT:
ATLAS 24
72'L10 x 192' - 420 GM
12' O.C.

ORDER ID: SO# 6273-01

WIDTH-STEEL-FAB-HSS-HSSDROP: 72-420-220-18-9.5

DRAWING TITLE: COVER PAGE

SHEET NO.: FB-1

PAGE NO.: 002 / 14

LICENSED PROFESSIONAL ENGINEER
M. S. NICOLAU
13-2018
PROVINCE OF ONTARIO

REVIEWED
By ONT Construction at 9:17 am, Sep 26, 2018

000014

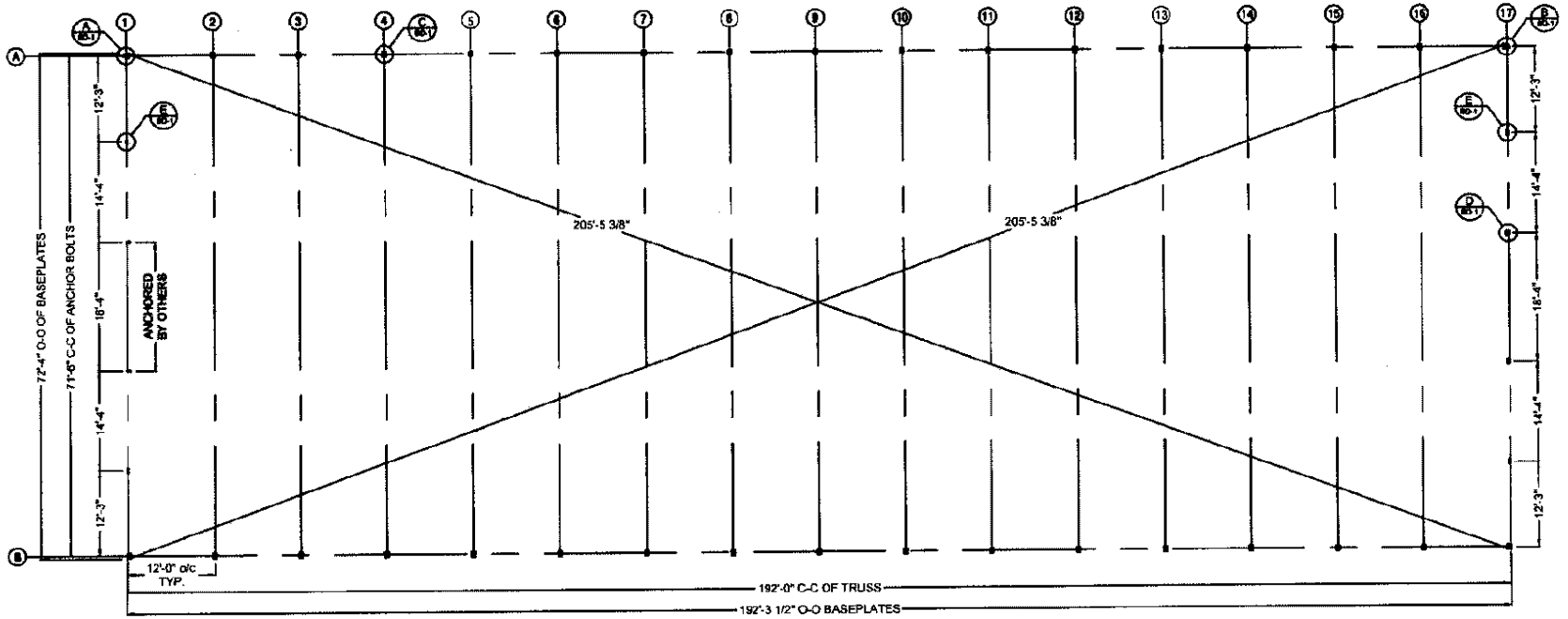

BRITESPAN BUILDING SYSTEMS INC

TF: 800-487-5648
www.britespanbuildings.com

THIS DRAWING IS PROPERTY OF BRITESPAN BUILDING SYSTEMS INC.. ANY REPRODUCTION IN WHOLE OR IN PART WITHOUT THE EXPRESSED WRITTEN CONSENT OF BRITESPAN BUILDING SYSTEMS INC. IS PROHIBITED. THIS DRAWING IS NOT TO SCALE UNLESS OTHERWISE NOTED.

DRAWN BY: JLK
CHECKED BY: CJM

REV:	DESCRIPTION:	DATE:
1	ISSUED FOR REVIEW	12.SEP.2018

DEALER:
BBS ONTARIO
688 JOSEPHINE STREET NORTH, R.R.#1
WINGHAM, ON. N0G 2W0

CUSTOMER:
REGIONAL MUNICIPALITY OF YORK
3525 BASELINE ROAD
SUTTON, ON. L0E 1R0

PROJECT:
ATLAS 24
72'L10 x 192' - 420 GM
12' O.C.

ORDER ID:
SO# 6273-01

WIDTH-STEEL-FAR-HSS-HSSOROP:
72-420-220-18-9.5

DRAWING TITLE:
BASEPLATE LAYOUT

SHEET NO.: FB-2
PAGE NO.: 003 / 14

LICENSED PROFESSIONAL ENGINEER
M. S. NICOLAU
PROVINCE OF ONTARIO

REVIEWED
By ONT Construction at 9:11 am, Sep 20, 2018

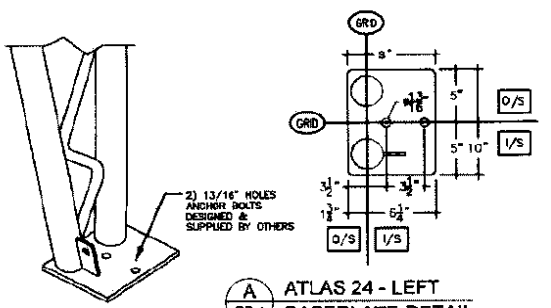

A BD-1 ATLAS 24 - LEFT BASEPLATE DETAIL

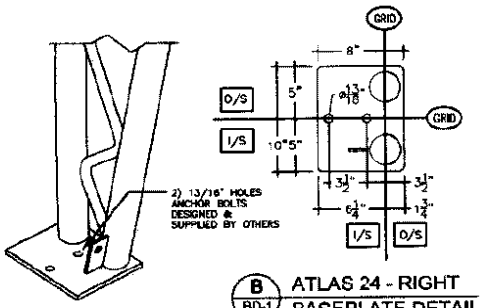

B BD-1 ATLAS 24 - RIGHT BASEPLATE DETAIL

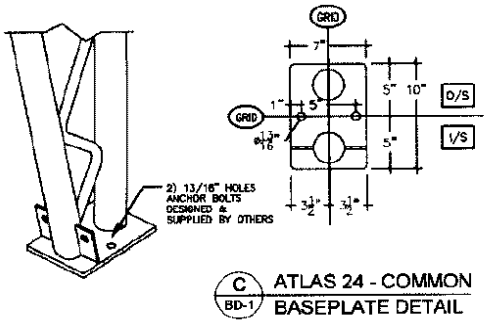

C BD-1 ATLAS 24 - COMMON BASEPLATE DETAIL

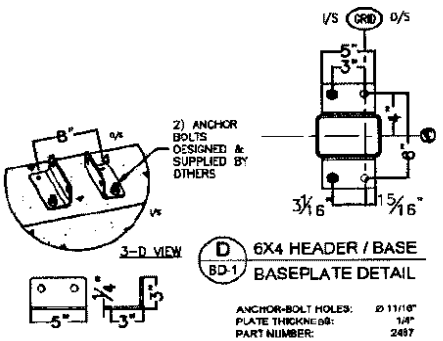

D BD-1 6X4 HEADER / BASE BASEPLATE DETAIL

ANCHOR-BOLT HOLES: Ø 11/16"
PLATE THICKNESS: 1/4"
PART NUMBER: 2487

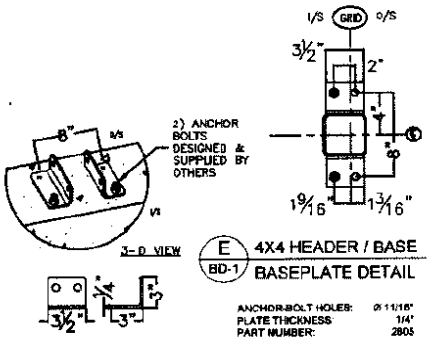

E BD-1 4X4 HEADER / BASE BASEPLATE DETAIL

ANCHOR-BOLT HOLES: Ø 11/16"
PLATE THICKNESS: 1/4"
PART NUMBER: 2805

BRITESPAN BUILDING SYSTEMS INC
TF: 800-407-5846
www.britespanbuildings.com

THIS DRAWING IS PROPERTY OF BRITESPAN BUILDING SYSTEMS INC. ANY REPRODUCTION IN WHOLE OR IN PART WITHOUT THE EXPRESSED WRITTEN CONSENT OF BRITESPAN BUILDING SYSTEMS INC. IS PROHIBITED. THIS DRAWING IS NOT TO SCALE UNLESS OTHERWISE NOTED.

DRAWN BY: JLK
CHECKED BY: CJM

REV:	DESCRIPTION:	DATE:
1	ISSUED FOR REVIEW	12 SEP 2018

DEALER:
BBS ONTARIO
688 JOSEPHINE STREET NORTH, R.R.#1
WINGHAM, ON. N0G 2W0

CUSTOMER:
REGIONAL MUNICIPALITY OF YORK
3525 BASELINE ROAD
SUTTON, ON. L0E 1R0

PROJECT:
ATLAS 24
72'L10 x 192' - 420 GM
12' O.C.

ORDER ID: SO# 5273-01
WIDTH-STEEL-FAR-HSS-HSSDROP: 72-420-220-18-9.5

DRAWING TITLE: BASEPLATE DETAILS
SHEET NO.: BD-1
PAGE NO.: 004 /14

LICENSED PROFESSIONAL ENGINEER
M. S. MCCORD
PROVINCE OF ONTARIO

REVIEWED
By CMET Construction at 5:11 pm, Sep 20, 2018

NOTE:
BUILDING IS DESIGNED AS EXPOSED (Cw=0.75) AND ENCLDSED (ALL OPENINGS MUST BE RATED FOR SITE LOADS)

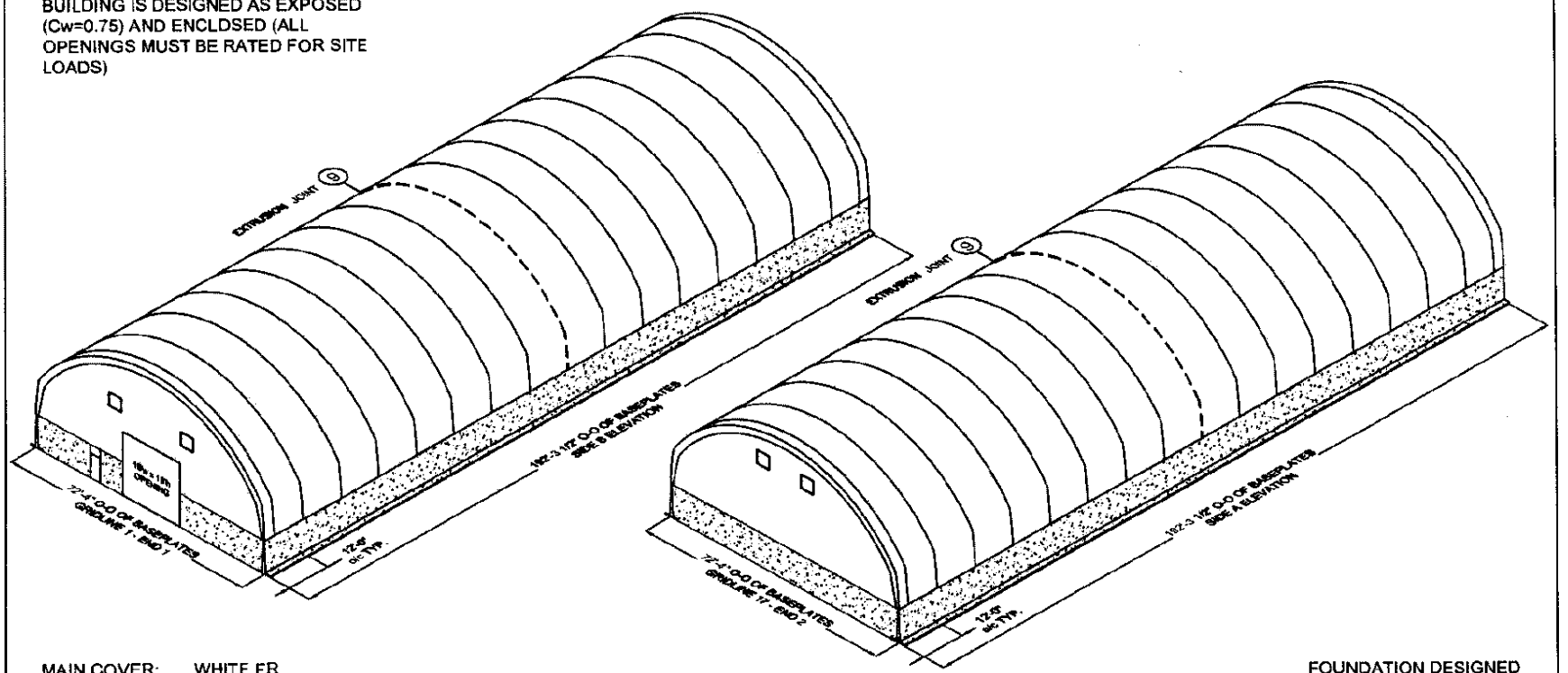

MAIN COVER: WHITE FR
ENDFLAPS: BLUE FR
ENDWALL(S): WHITE FR

FOUNDATION DESIGNED & SUPPLIED BY OTHERS

BRITESPAN BUILDING SYSTEMS INC
TF: 800-407-5846
www.britespanbuildings.com

THIS DRAWING IS PROPERTY OF BRITESPAN BUILDING SYSTEMS INC.. ANY REPRODUCTION IN WHOLE OR IN PART WITHOUT THE EXPRESSED WRITTEN CONSENT OF BRITESPAN BUILDING SYSTEMS INC. IS PROHIBITED. THIS DRAWING IS NOT TO SCALE UNLESS OTHERWISE NOTED.

DRAWN BY: JLK
CHECKED BY: CJM

REV:	DESCRIPTION:	DATE:
1	ISSUED FOR REVIEW	12.SEP.2018

DEALER:
BBS ONTARIO
688 JOSEPHINE STREET NORTH, R.R.#1
WINGHAM, ON. N0G 2W0

CUSTOMER:
REGIONAL MUNICIPALITY OF YORK
3525 BASELINE ROAD
SUTTON, ON. L0E 1R0

PROJECT:
ATLAS 24
72'L10 x 192' - 420 GM
12' O.C.

ORDER ID: SO# 6273-01
WIDTH-STEEL-FAB-HSS-HSSDROP: 72-420-220-18-9.5

DRAWING TITLE: PROJECT LAYOUT
SHEET NO.: FB-3
PAGE NO.: 005 /14

LICENSED PROFESSIONAL ENGINEER
M. S. NICOLAU
9-13-2018
PROVINCE OF ONTARIO

REVIEWED
By CMST Construction at 8:11 am, Sep 20, 2018

EXTRUSION LAYOUT

ZERO-TO-ZERO OF BASE PLATES = 104'-3"
EXTRUSION ON GRID 9 ONLY

ASSEMBLED TRUSS WEIGHT w/ BASEPLATES ~ 1215 lbs (each)

ATLAS 24 - 72'L10

ITEM	QTY.	PART #	TRUSS & PART #
INTERIOR TRUSS			
1	2	850	85'/70'/72'/82' COMMON HEAVY TRUSS
2	2	130	85'/70'/72'/82' COMMON TRUSS
3	2	2367	85'/72' COMMON HEAVY LEG
END TRUSS			
4	4	132	85'/70'/72'/82' END TRUSS
5	1	2369	85'/72' HEAVY END LEG – RIGHT
9	1	2368	85'/72' HEAVY END LEG – LEFT

ATLAS 24 72'L10	12'-0" BAY		BRACING LEGEND
	ITEM #1	LENGTH	P = PURLIN
C1 CABLE	861179-9	179"	R = RIDGE PURLIN
C2 CABLE	861192-9	192"	X = CROSS CABLE

FOR PURLIN LOCATIONS SEE: SD-1
FOR CABLE LOCATIONS SEE: SD-2

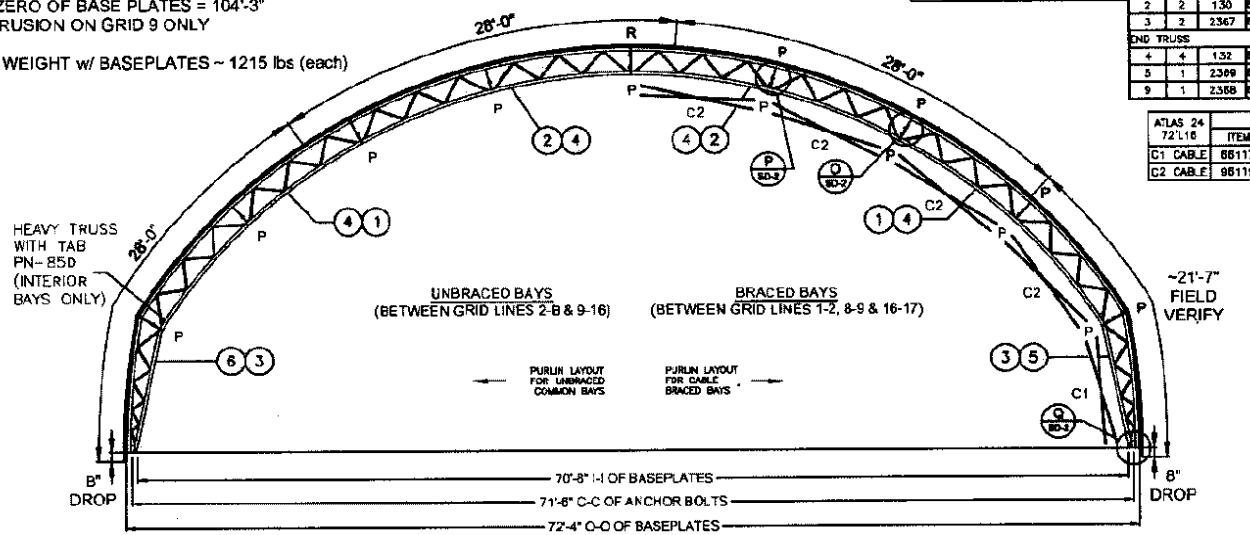

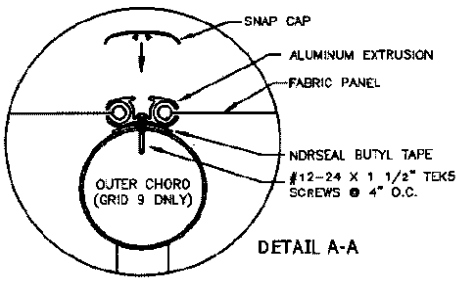

DETAIL A-A

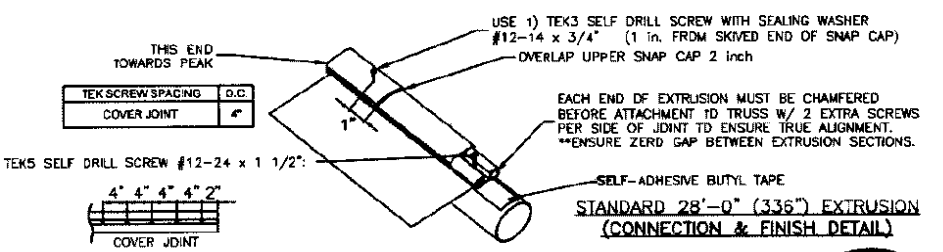

STANDARD 28'-0" (336") EXTRUSION (CONNECTION & FINISH DETAIL)

BRITESPAN BUILDING SYSTEMS INC
TF: 800-407-5846
www.britespanbuildings.com

THIS DRAWING IS PROPERTY OF BRITESPAN BUILDING SYSTEMS INC. ANY REPRODUCTION IN WHOLE OR IN PART WITHOUT THE EXPRESSED WRITTEN CONSENT OF BRITESPAN BUILDING SYSTEMS INC. IS PROHIBITED. THIS DRAWING IS NOT TO SCALE UNLESS OTHERWISE NOTED.

DRAWN BY: JLK
CHECKED BY: CJM

REV:	DESCRIPTION:	DATE:
1	ISSUED FOR REVIEW	12.SEP.2018

DEALER:
BBS ONTARIO
688 JOSEPHINE STREET NORTH, R.R.#1
WINGHAM, ON. N0G 2W0

CUSTOMER:
REGIONAL MUNICIPALITY OF YORK
3525 BASELINE ROAD
SUTTON, ON. L0E 1R0

PROJECT:
ATLAS 24
72'L10 x 192' - 420 GM
12' O.C.

ORDER ID:
SO# 6273-01

WIDTH-STEEL-FAB-HSS-HSSDROP:
72-420-220-18-9.5

DRAWING TITLE:
PURLIN & X-CABLE LAYOUT

SHEET NO.: FB-4
PAGE NO.: 008 /14

LICENSED PROFESSIONAL ENGINEER
M. S. NICOLAU
Sep 13-2018
PROVINCE OF ONTARIO

REVIEWED
By CMHT Construction at 8:11 am, Sep 20, 2018

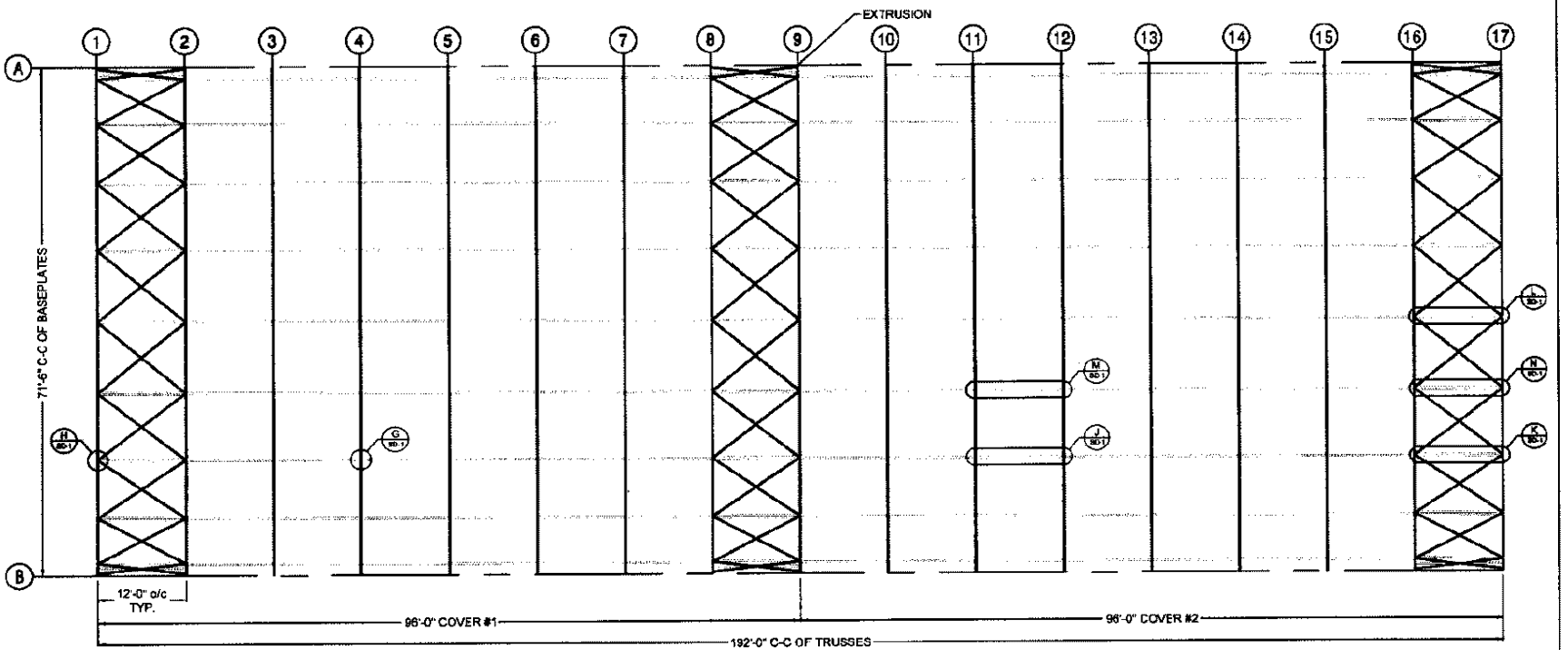

PLAN VIEW

FOR PURLIN DETAILS SEE: SD-1

FOR CABLE DETAILS SEE: SD-2

NOTE: THIS BUILDING USES ALL 2 7/8" 14Ga. PURLINS

BRITESPAN BUILDING SYSTEMS INC

TF: 800-407-5846
www.britespanbuildings.com

THIS DRAWING IS PROPERTY OF BRITESPAN BUILDING SYSTEMS INC.. ANY REPRODUCTION IN WHOLE OR IN PART WITHOUT THE EXPRESSED WRITTEN CONSENT OF BRITESPAN BUILDING SYSTEMS INC. IS PROHIBITED. THIS DRAWING IS NOT TO SCALE UNLESS OTHERWISE NOTED.

DRAWN BY: JLK

CHECKED BY: CJM

REV:	DESCRIPTION:	DATE:
1	ISSUED FOR REVIEW	12.SEP.2018

DEALER:
BBS ONTARIO
688 JOSEPHINE STREET NORTH, R.R.#1
WINGHAM, ON. N0G 2W0

CUSTOMER:
REGIONAL MUNICIPALITY OF YORK
3525 BASELINE ROAD
SUTTON, ON. L0E 1R0

PROJECT:
ATLAS 24
72'L10 x 192' - 420 GM
12' O.C.

ORDER ID:
SO# 6273-01

WIDTH-STEEL-FAB-HSS-HSSDROP:
72-420-220-18-9.5

DRAWING TITLE:
BRACING LAYOUT - PLAN

SHEET NO.: FB-5

PAGE NO.: 007 /14

LICENSED PROFESSIONAL ENGINEER
M. S. NICOLAU
PROVINCE OF ONTARIO

REVIEWED
By OWT Construction at 9:11 am, Sep 26, 2018

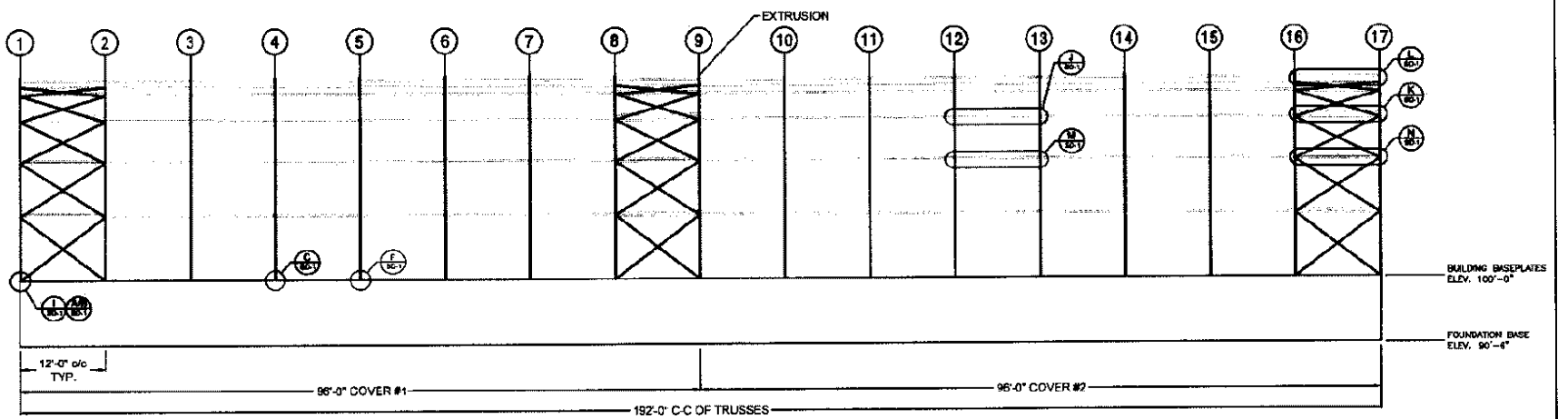

ELEVATION

FOUNDATION DESIGNED
& SUPPLIED BY OTHERS

BRITESPAN BUILDING SYSTEMS INC

TF. 800-407-5846
www.britespanbuildings.com

THIS DRAWING IS PROPERTY OF BRITESPAN BUILDING SYSTEMS INC., ANY REPRODUCTION IN WHOLE OR IN PART WITHOUT THE EXPRESSED WRITTEN CONSENT OF BRITESPAN BUILDING SYSTEMS INC. IS PROHIBITED. THIS DRAWING IS NOT TO SCALE UNLESS OTHERWISE NOTED.

DRAWN BY: JLK
CHECKED BY: CJM

REV:	DESCRIPTION:	DATE:
1	ISSUED FOR REVIEW	12.SEP.2018

DEALER:
BBS ONTARIO
688 JOSEPHINE STREET NORTH, R.R.#1
WINGHAM, ON. N0G 2W0

CUSTOMER:
REGIONAL MUNICIPALITY OF YORK
3525 BASELINE ROAD
SUTTON, ON. L0E 1R0

PROJECT
ATLAS 24
72'L10 x 192' - 420 GM
12' O.C.

ORDER ID: SO# 6273-01

WIDTH-STEEL-FAB-HSS-HSSDRCP: 72-420-220-18-9.5

DRAWING TITLE: BRACING LAYOUT - ELEVATION

SHEET NO.: FB-6

PAGE NO.: 008 / 14

LICENSED PROFESSIONAL ENGINEER
M.S. NICOLAU
9-13-2018
PROVINCE OF ONTARIO

REVIEWED
By ONT Construction at ETT ent, Sep 26, 2018

000020

MARK #	QTY.	COMPONENTS (in)
EC-1	2	1518-HSS- VERTICAL- 4" X 4" X 1/8"- 2" CENTRES - 235"
EC-2	4	1523- HSS- HEADER- 4" X 4" X 1/8"- 47"
564	2	BRKT- 4" DEEP HSS TOP SADDLE- 2-7/8" CHORD
2B05	28	HEADER/ BASE ANGLE- 4" X 4" HSS - 2" CENTRES
EC-3	2	1521- HSS- VERT- 4" X 8" X 3/16"- 5" CENTRES- 427"
167	2	BRKT- HSS TOP SADDLE W/ TAB - 2 7/8" CHORD
562	2	BRKT- TOP PLATE ASSY. 4x8/10- 2 3/8"/2 7/8"/3 1/2" CRD
2372	4	HEADER/ BASE ANGLE- 4" X 8" HSS - 5" CENTRES
HD-1	1	2373- HSS- HEADER- 4" X 8" X 3/16"- 5" CENTRES- 215"
HD-2	2	1523- HSS- HEADER- 4" X 4" X 1/8"- 215"
HZ-1/200	4	1538-180- CEE CHANNEL 6" - 14 ga - 180"/4572mm
HZ-2/201	1	1538-240- CEE CHANNEL 6" - 14 ga - 240"/6096mm
194	14	BRKT - CEE CHANNEL ANGLE
162	1	BRKT- 6" DEEP HSS TOP SADDLE- 2-7/8" CHORD

NOTES:
1. "H" DENOTES BLOCK WINCH & STRAP FOR FASTENING TUBE
2. EC VERTICAL LOCATION DIMENSIONS ARE TO THE CENTRELINE OF MEMBERS
3. FIELD DRILL HSS AS REQUIRED
4. FINAL FABRIC TERMINATION DESIGNED & SUPPLIED BY OTHERS FOR ALL APRONS
5. FIELD CUT CEE CHANNEL AS REQUIRED

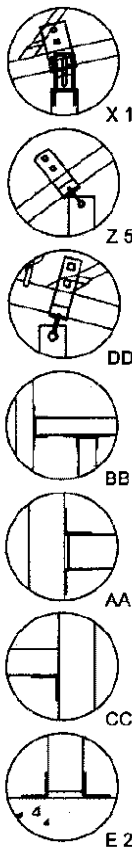

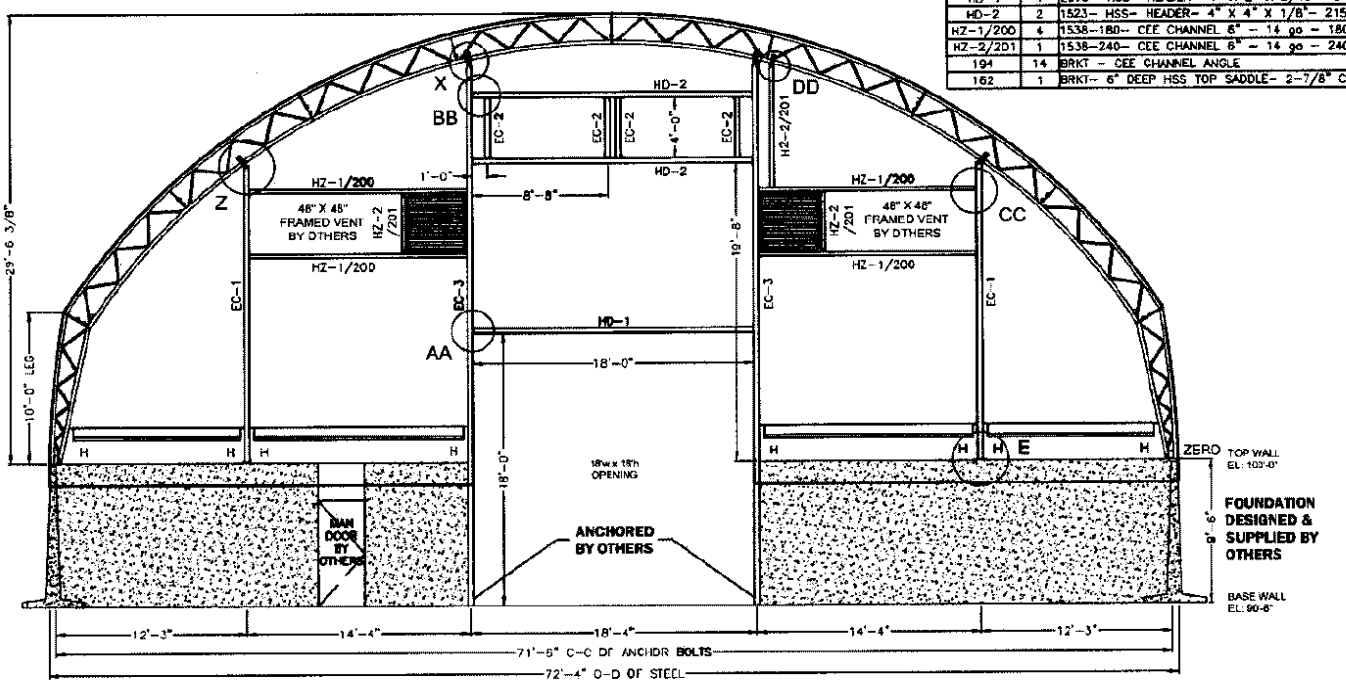

GRIDLINE 1 - END 1

BRITESPAN BUILDING SYSTEMS INC
TF: 800-407-5846
www.britespanbuildings.com

REV:	DESCRIPTION:	DATE:
1	ISSUED FOR REVIEW	12.SEP.2018

DEALER:
BBS ONTARIO
688 JOSEPHINE STREET NORTH, R.R.#1
WINGHAM, ON. N0G 2W0

CUSTOMER:
REGIONAL MUNICIPALITY OF YORK
3525 BASELINE ROAD
SUTTON, ON. L0E 1R0

PROJECT:
ATLAS 24
72'L10 x 192' - 420 GM
12' O.C.

ORDER ID: SO# 6273-01

WIDTH-STEEL-FAB-HSS-HSSDROP: 72-420-220-18-9.5

DRAWING TITLE: END WALL 1 LAYOUT

SHEET NO.: EW-1

PAGE NO.: 009 / 14

DRAWN BY: JLK

CHECKED BY: CJM

THIS DRAWING IS PROPERTY OF BRITESPAN BUILDING SYSTEMS INC. ANY REPRODUCTION IN WHOLE OR IN PART WITHOUT THE EXPRESSED WRITTEN CONSENT OF BRITESPAN BUILDING SYSTEMS INC. IS PROHIBITED. THIS DRAWING IS NOT TO SCALE UNLESS OTHERWISE NOTED.

LICENSED PROFESSIONAL ENGINEER
M. S. NICOLAIL
9-13-2018
PROVINCE OF ONTARIO

REVIEWED
By QMT Construction at 8:11 am, Sep 26, 2018

NOTES:
1. "H" DENOTES BLOCK WINCH & STRAP FOR FASTENING TUBE
2. EC VERTICAL LOCATION DIMENSIONS ARE TO THE CENTRELINE OF MEMBERS
3. FIELD DRILL HSS AS REQUIRED
4. FINAL FABRIC TERMINATION DESIGNED & SUPPLIED BY OTHERS FOR ALL APRONS
5. FIELD CUT CEE CHANNEL AS REQUIRED

MARK #	QTY.	COMPONENTS (in)
EC-1	2	1518-HSS- VERTICAL- 4" X 4" X 1/8"- 2" CENTRES - 236"
564	2	BRKT- 4" DEEP HSS TOP SADDLE- 2-7/8" CHORD
2805	4	HEADER/ BASE ANGLE- 4" X 4" HSS - 2" CENTRES
EC-2	2	2408- HSS- VERTICAL- 4" X 8" X 3/16"- 3" CENTRES- 315"
162	2	BRKT- 6" DEEP HSS TOP SADDLE- 2-7/8" CHORD
2407	4	HEADER/ BASE ANGLE- 4" X 6" HSS - 3" CENTRES
HZ-1	2	1529-39 (2 1/2 - 14GA) + 1531-146 (2 7/8" 14 GA)
HZ-2	1	1529-39 (2 1/2 - 14GA) + 1531-194 (2 7/8" 14 GA)
195	6	BRKT - ESS HORIZ. ANGLE
HZ-1/201	3	1538-240- CEE CHANNEL 6" - 14 ga - 240"/6096mm
194	8	BRKT - CEE CHANNEL ANGLE

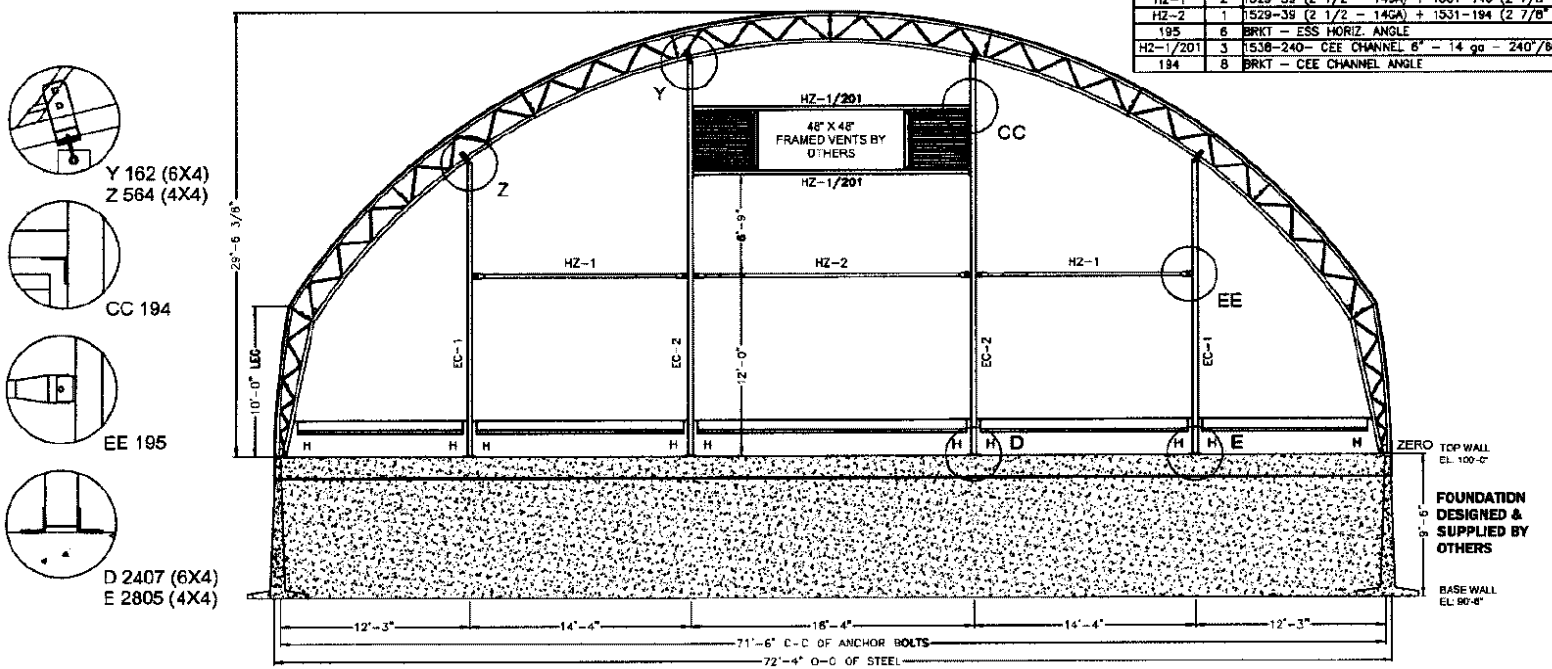

GRIDLINE 17 - END 2

BRITESPAN BUILDING SYSTEMS INC
TF: 800-407-5848
www.britespanbuildings.com

THIS DRAWING IS PROPERTY OF BRITESPAN BUILDING SYSTEMS INC.. ANY REPRODUCTION IN WHOLE OR IN PART WITHOUT THE EXPRESSED WRITTEN CONSENT OF BRITESPAN BUILDING SYSTEMS INC. IS PROHIBITED. THIS DRAWING IS NOT TO SCALE UNLESS OTHERWISE NOTED.

DRAWN BY: JLK
CHECKED BY: CJN

REV:	DESCRIPTION:	DATE:
1	ISSUED FOR REVIEW	12 SEP 2018

DEALER:
BBS ONTARIO
688 JOSEPHINE STREET NORTH, R.R.#1
WINGHAM, ON. N0G 2W0

CUSTOMER:
REGIONAL MUNICIPALITY OF YORK
3525 BASELINE ROAD
SUTTON, ON. L0E 1R0

PROJECT:
ATLAS 24
72'L10 x 192' - 420 GM
12' O.C.

ORDER ID: SO# 6273-01
WIDTH-STEEL-FAB-HSS-HSSDROP: 72-420-220-18-9.5

DRAWING TITLE: ENDWALL 2 LAYOUT
SHEET NO.: EW-2
PAGE NO.: 010 /14

LICENSED PROFESSIONAL ENGINEER
M. S. NICOLAU
9-13-2018
PROVINCE OF ONTARIO

REVIEWED
By ONT Construction at 8:11 am, Sep 20, 2018

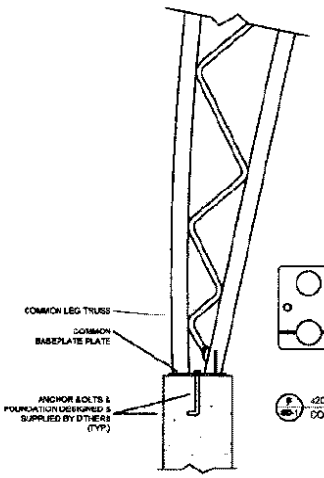

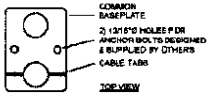

F 420 COMMON LEG CONNECTION DETAIL

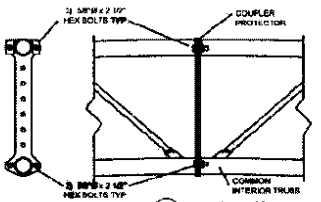

G COMMON TRUSS CONNECTION DETAIL

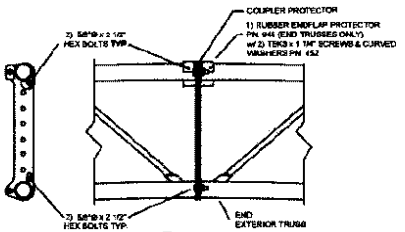

H END TRUSS CONNECTION DETAIL

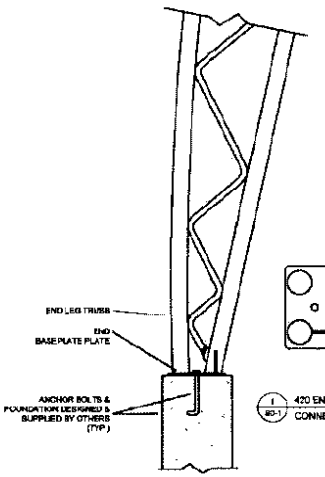

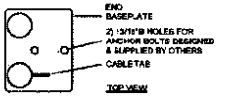

I 420 END LEG CONNECTION DETAIL

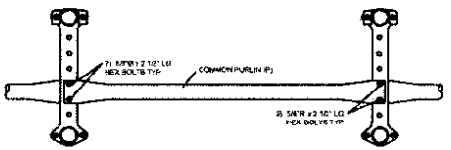

J COMMON PURLIN AT DOGBONE CONNECTION DETAIL

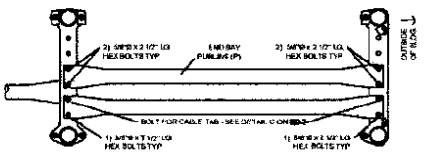

K END BRACED BAY PURLIN AT DOGBONE CONNECTION DETAIL

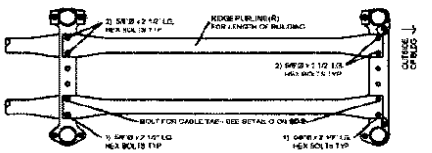

L RIDGE PURLIN AT DOGBONE CONNECTION DETAIL

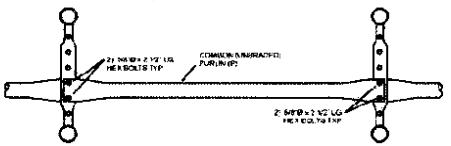

M COMMON PURLIN AT KINGPIN CONNECTION DETAIL

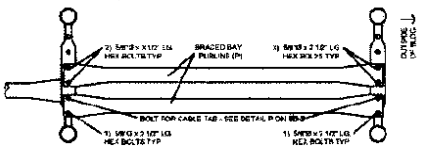

N END BRACED BAY PURLIN AT KINGPIN CONNECTION DETAIL

BRITESPAN BUILDING SYSTEMS INC

TF: 800-407-5846
www.britespanbuildings.com

REV:	DESCRIPTION:	DATE:
1	ISSUED FOR REVIEW	12 SEP 2014

THIS DRAWING IS PROPERTY OF BRITESPAN BUILDING SYSTEMS INC., ANY REPRODUCTION IN WHOLE OR IN PART WITHOUT THE EXPRESSED WRITTEN CONSENT OF BRITESPAN BUILDING SYSTEMS INC. IS PROHIBITED. THIS DRAWING IS NOT TO SCALE UNLESS OTHERWISE NOTED.

DRAWN BY: JLK
CHECKED BY: CJM

DEALER:
BBS ONTARIO
688 JOSEPHINE STREET NORTH, R.R.#1
WINGHAM, ON. N0G 2W0

CUSTOMER:
REGIONAL MUNICIPALITY OF YORK
3525 BASELINE ROAD
SUTTON, ON. L0E 1R0

PROJECT:
ATLAS 24
72'L10 x 192' - 420 GM
12' O.C.

ORDER ID: SO# 6273-01
WIDTH-STEEL-FAG-HSS-HSSDROP: 72-420-220-18-9.5

DRAWING TITLE: STANDARD DETAILS
SHEET NO.: SD-1
PAGE NO.: 011 / 14

LICENSED PROFESSIONAL ENGINEER
9 M. B. NICOLAU 2018
PROVINCE OF ONTARIO

REVIEWED
By OBC Construction at 9:11 am, Sep 20, 2018

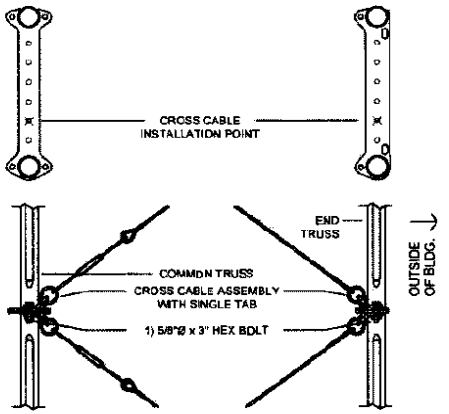

SINGLE BRACED END BAY

O / SD-2 CROSS CABLES AT **DOGBONE** CONNECTION DETAILS

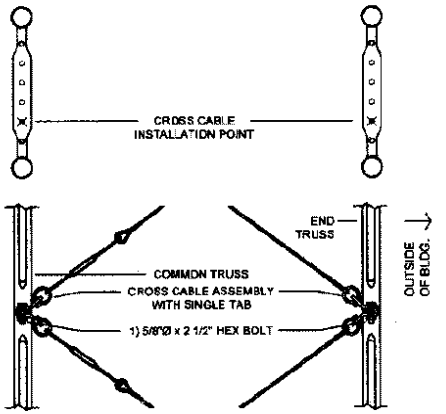

SINGLE BRACED END BAY

P / SD-2 CROSS CABLES AT KINGPIN CONNECTION DETAILS

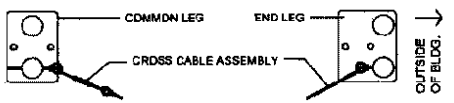

SINGLE BRACED END BAY

Q / SD-2 CROSS CABLES AT LEG CONNECTION DETAILS

BRITESPAN BUILDING SYSTEMS INC

TF: 800-407-5646
www.britespanbuildings.com

THIS DRAWING IS PROPERTY OF BRITESPAN BUILDING SYSTEMS INC. ANY REPRODUCTION IN WHOLE OR IN PART WITHOUT THE EXPRESSED WRITTEN CONSENT OF BRITESPAN BUILDING SYSTEMS INC. IS PROHIBITED. THIS DRAWING IS NOT TO SCALE UNLESS OTHERWISE NOTED.

DRAWN BY: JLK
CHECKED BY: CJM

REV.	DESCRIPTION	DATE
1	ISSUED FOR REVIEW	12.SEP.2018

DEALER:
BBS ONTARIO
688 JOSEPHINE STREET NORTH, R.R.#1
WINGHAM, ON. N0G 2W0

CUSTOMER:
REGIONAL MUNICIPALITY OF YORK
3525 BASELINE ROAD
SUTTON, ON. L0E 1R0

PROJECT:
ATLAS 24
72'L10 x 192' - 420 GM
12' O.C.

ORDER ID: SO# 6273-01

WIDTH-STEEL-FAB-HSS-HSSDROP: 72-420-220-18-9.5

DRAWING TITLE: STANDARD DETAILS

SHEET NO.: SD-2

PAGE NO.: 012 /14

LICENSED PROFESSIONAL ENGINEER
M. S. NICOLAU
9-13-2018
PROVINCE OF ONTARIO

REVIEWED
By CMT Construction at 9:11 am, Sep 26, 2018

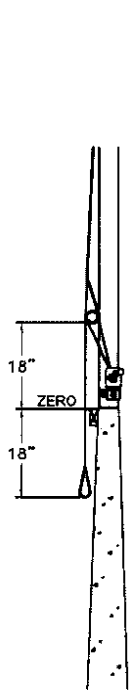

R SD-3 ENDWALL FABRIC TERM. CONNECTION DETAIL

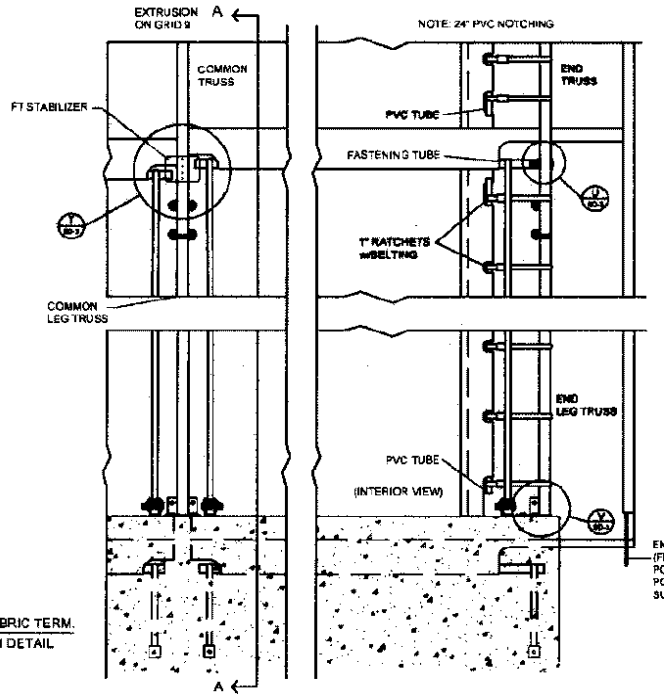

S SD-3 220/420 KEDER JOINT CONNECTION DETAIL

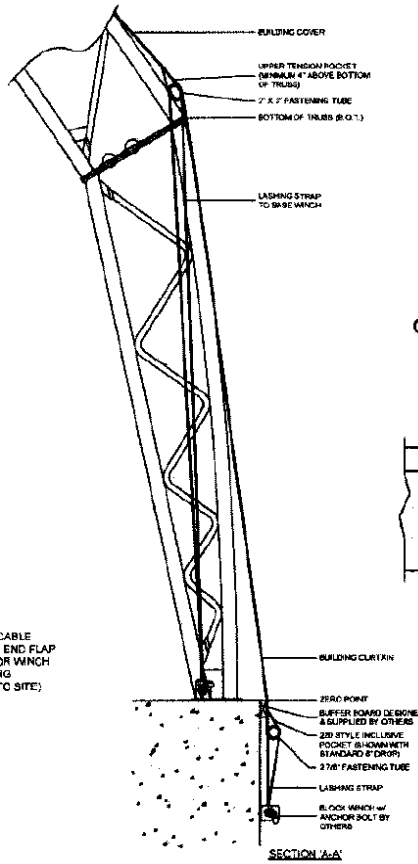

SECTION 'A-A'

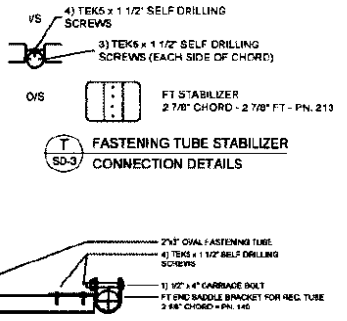

T SD-3 FASTENING TUBE STABILIZER CONNECTION DETAILS

U SD-3 FASTENING TUBE SADDLE CONNECTION DETAILS

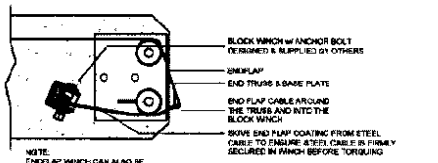

V SD-3 END FLAP CABLE & WINCH CONNECTION DETAIL

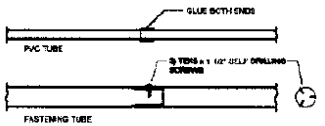

W SD-3 PVC / FASTENING TUBE CONNECTION DETAILS

BRITESPAN BUILDING SYSTEMS INC

TF: 800-407-5848
www.britespanbuildings.com

REV:	DESCRIPTION:	DATE:
1	ISSUED FOR REVIEW	12 SEP 2018

THIS DRAWING IS PROPERTY OF BRITESPAN BUILDING SYSTEMS INC., ANY REPRODUCTION IN WHOLE OR IN PART WITHOUT THE EXPRESSED WRITTEN CONSENT OF BRITESPAN BUILDING SYSTEMS INC. IS PROHIBITED. THIS DRAWING IS NOT TO SCALE UNLESS OTHERWISE NOTED.

DRAWN BY: JLK
CHECKED BY: CJM

DEALER:
BBS ONTARIO
688 JOSEPHINE STREET NORTH, R.R.#1
WINGHAM, ON. N0G 2W0

CUSTOMER:
REGIONAL MUNICIPALITY OF YORK
3525 BASELINE ROAD
SUTTON, ON. L0E 1R0

PROJECT:
ATLAS 24
72'L10 x 192' - 420 GM
12' O.C.

ORDER ID.
SO# 6273-01

WIDTH-STEEL-FAB-HSS-HSSDROP:
72-420-220-18-9.5

DRAWING TITLE:
STANDARD DETAILS

SHEET NO.: SD-3
PAGE NO.: 013 / 14

LICENSED PROFESSIONAL ENGINEER
M.S. NICOLAU
9-13-2018
PROVINCE OF ONTARIO

REVIEWED
By OWT Construction at 8:11 am, Sep 20, 2018

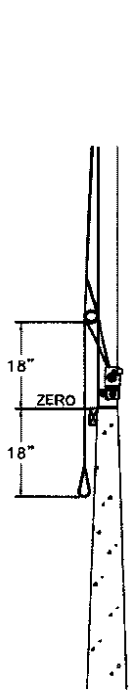

R SD-3 ENDWALL FABRIC TERM. CONNECTION DETAIL

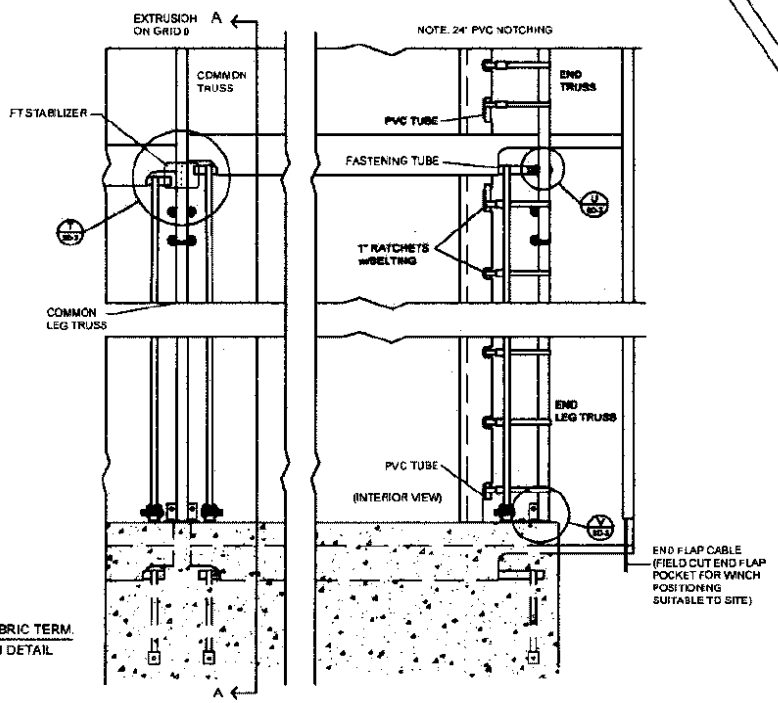

S SD-3 220/420 KEDER JOINT CONNECTION DETAIL

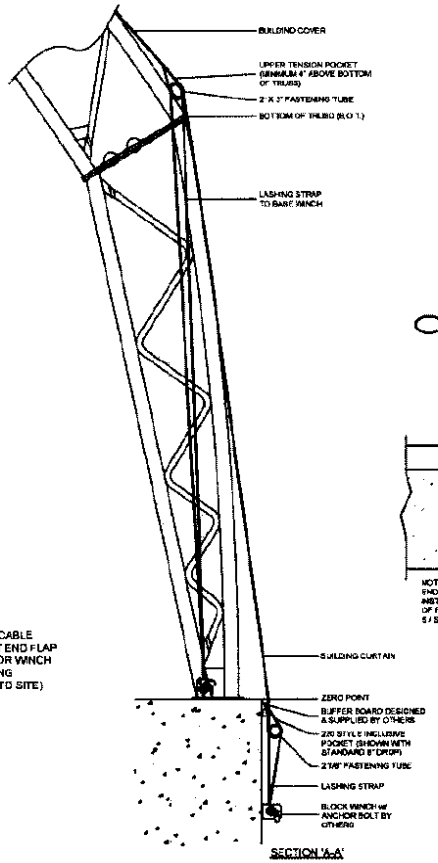

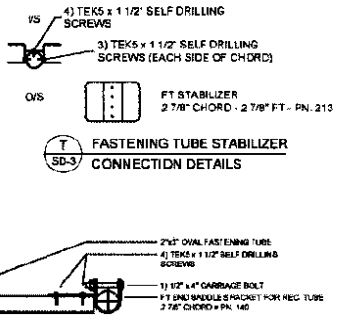

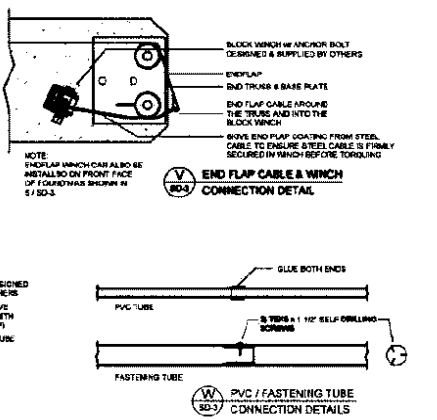

BRITESPAN BUILDING SYSTEMS INC

TF: 800-407-5848
www.britespanbuildings.com

THIS DRAWING IS PROPERTY OF BRITESPAN BUILDING SYSTEMS INC., ANY REPRODUCTION IN WHOLE OR IN PART WITHOUT THE EXPRESSED WRITTEN CONSENT OF BRITESPAN BUILDING SYSTEMS INC. IS PROHIBITED. THIS DRAWING IS NOT TO SCALE UNLESS OTHERWISE NOTED.

DRAWN BY: JLK
CHECKED BY: CJM

REV:	DESCRIPTION:	DATE:
1	ISSUED FOR REVIEW	12.SEP.2018

DEALER:
BBS ONTARIO
688 JOSEPHINE STREET NORTH, R.R.#1
WINGHAM, ON. N0G 2W0

CUSTOMER:
REGIONAL MUNICIPALITY OF YORK
3525 BASELINE ROAD
SUTTON, ON. L0E 1R0

PROJECT:
ATLAS 24
72'L10 x 192' - 420 GM
12' O.C.

ORDER ID:
SO# 6273-01

WIDTH-STEEL-FAB-HSS-HSS-DROP:
72-420-220-18-9.5

DRAWING TITLE:
STANDARD DETAILS

SHEET NO.: SD-3
PAGE NO.: 013 / 14

LICENSED PROFESSIONAL ENGINEER
M. S. NUCCIARI
9-13-2018
PROVINCE OF ONTARIO

REVIEWED
by DWF Construction at 8:11 am, Sep 20, 2018

000026

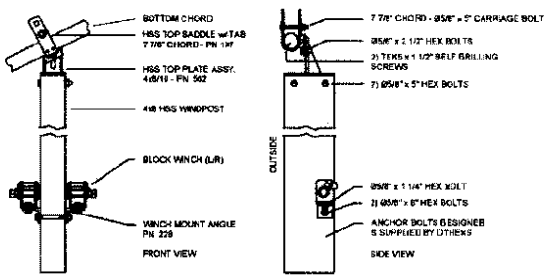

X ED-1 8x4 HSS WINDPOST CONNECTION DETAILS

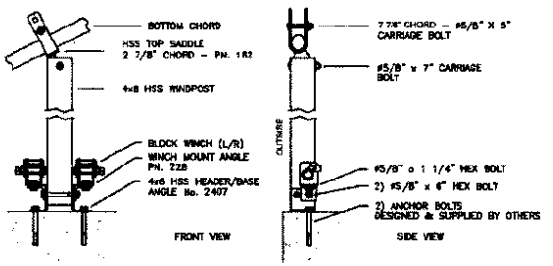

D BD-1 Y ED-1 6x4 HSS WINDPOST CONNECTION DETAILS

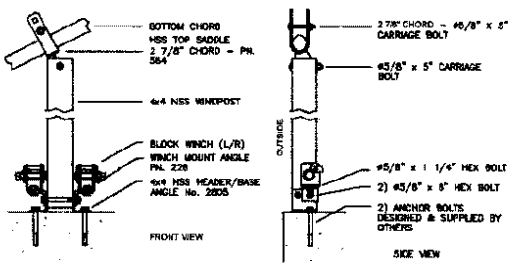

E BD-1 Z ED-1 4x4 HSS WINDPOST CONNECTION DETAILS

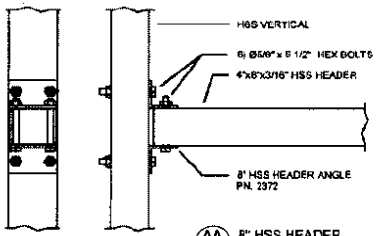

AA ED-1 8" HSS HEADER CONNECTION DETAIL

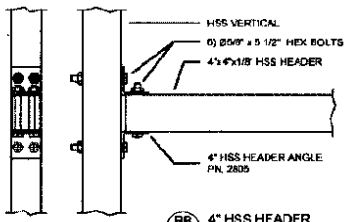

BB ED-1 4" HSS HEADER CONNECTION DETAIL

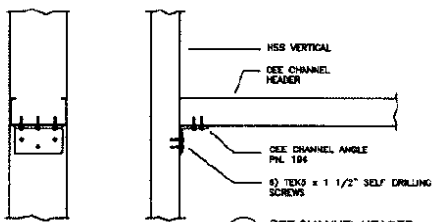

CC ED-1 CEE CHANNEL HEADER CONNECTION DETAIL

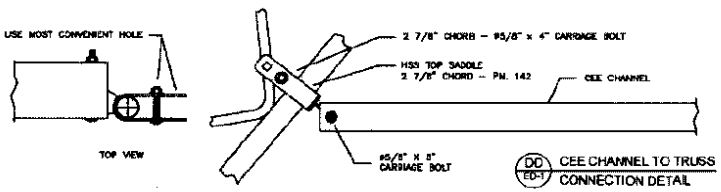

DD ED-1 CEE CHANNEL TO TRUSS CONNECTION DETAIL

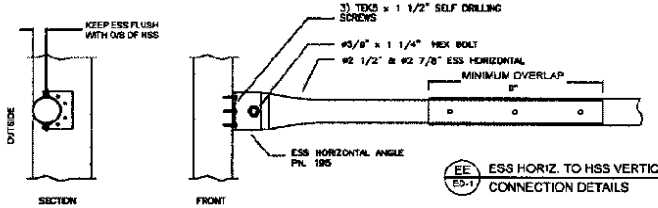

EE ED-1 ESS HORIZ. TO HSS VERTICAL CONNECTION DETAILS

BRITESPAN BUILDING SYSTEMS INC

TF: 800-467-5846
www.britespanbuildings.com

REV:	DESCRIPTION:	DATE:
1	ISSUED FOR REVIEW	12.SEP.2018

DEALER:
BBS ONTARIO
688 JOSEPHINE STREET NORTH, R.R.#1
WINGHAM, ON. N0G 2W0

CUSTOMER:
REGIONAL MUNICIPALITY OF YORK
3525 BASELINE ROAD
SUTTON, ON. L0E 1R0

THIS DRAWING IS PROPERTY OF BRITESPAN BUILDING SYSTEMS INC. ANY REPRODUCTION IN WHOLE OR IN PART WITHOUT THE EXPRESSED WRITTEN CONSENT OF BRITESPAN BUILDING SYSTEMS INC. IS PROHIBITED. THIS DRAWING IS NOT TO SCALE UNLESS OTHERWISE NOTED.

DRAWN BY: JLK
CHECKED BY: CJM

PROJECT:
ATLAS 24
72'L10 x 192' - 420 GM
12' O.C.

ORDER #:
SO# 6273-01

WIDTH STEEL FAB HSS HSS ROOF:
72-420-220-18-9.5

DRAWING TITLE:
ENDWALL DETAILS

SHEET No.: ED-1
PAGE NO.: 014 / 14

LICENSED PROFESSIONAL ENGINEER
M. S. NICOLAU
9-12-2018
PROVINCE OF ONTARIO

REVIEWED
By CWT Construction at 8:13 am, Sep 28, 2018

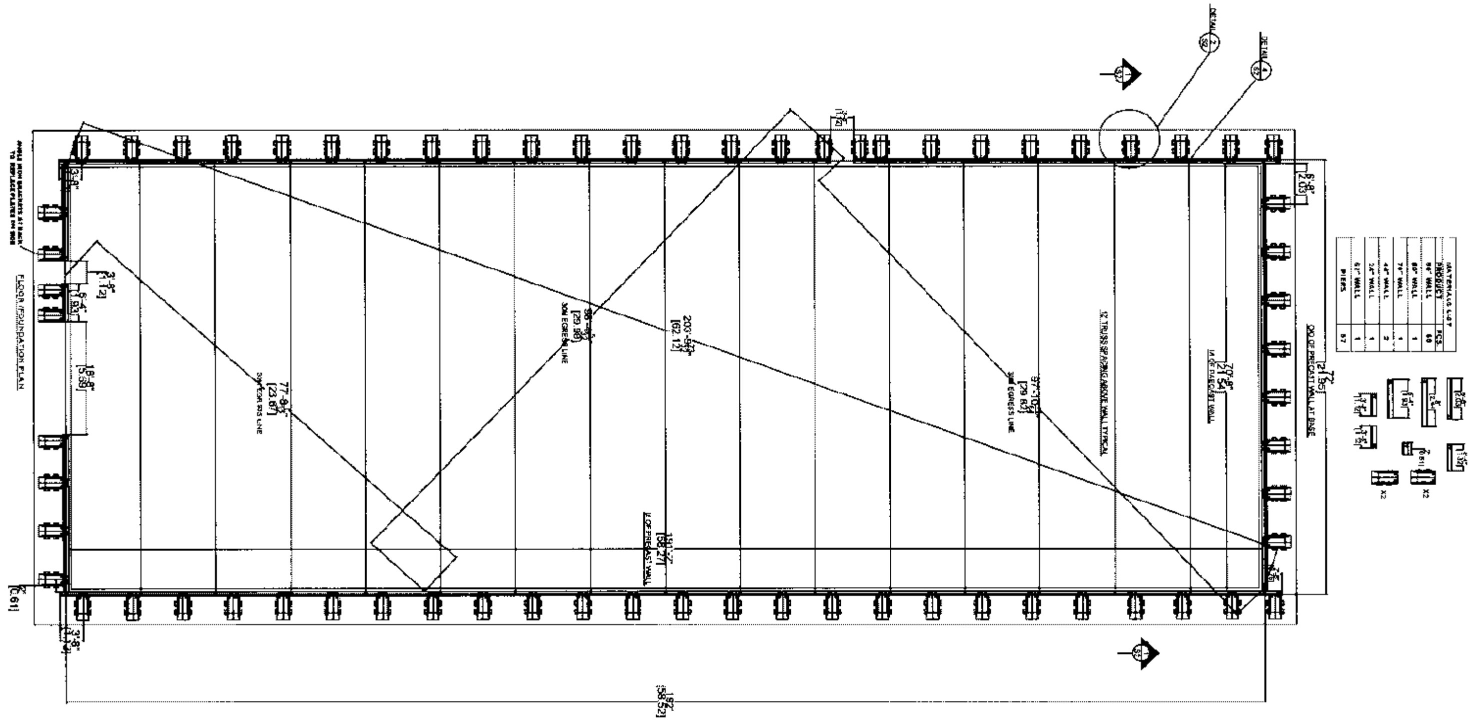

General Notes

No.	Revision/Issue	Date

Firm Name and Address

DESIGN CONCRETE SYSTEMS LIMITED
40 BIRCH STREET,
SEAFORTH ONTARIO
N0K 1W0
(519)527-0387

Project Name and Address

REGIONAL MUNICIPALITY OF YORK
3525 BASELINE ROAD
SUTTON, ON L0E 1R0

Date: **SEPT 17,2018**

DNS

Sheet: **01**

CKH

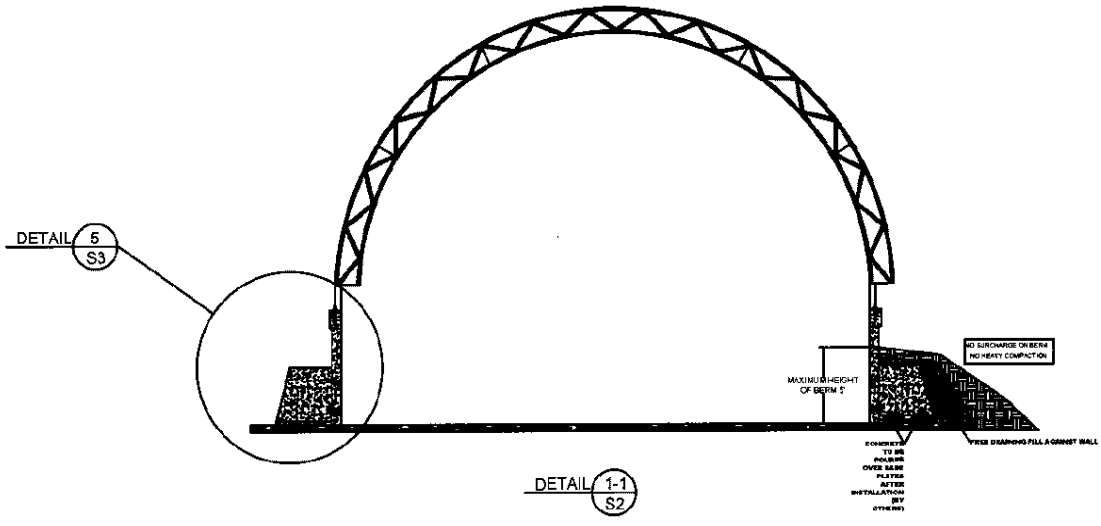

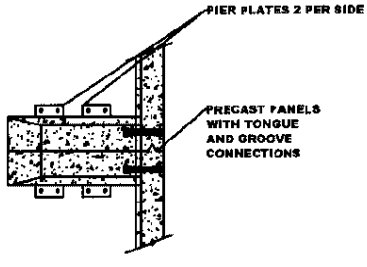

DETAIL 2 S2

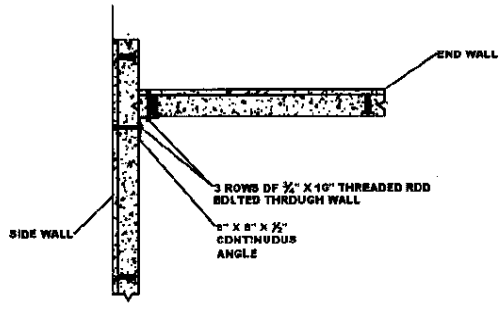

DETAIL 3 S2

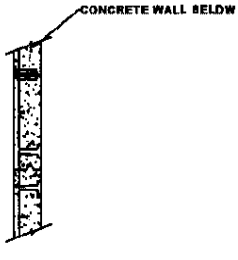

DETAIL 4 S2

NOTES:
THIS DRAWING AND ITS CALCULATIONS APPLY ONLY TO THE PRECAST WALL IN THE LOADS APPLIED TO IT. SEA CONTAINER DESIGN BY OTHERS.
-COMPLY WITH OBC 2012
-ASSUMED SOIL BEARING CAPACITY 75 kPa SLS/100 kPa ULS. TO BE VERIFIED BY SOILS CONSULTANT.
-GROUND SNOW LOAD 2.3 kPa.
-WIND LOAD q56 .35 kPa.
-RAIN LOAD .4 kPa.
-INDUSTRIAL USE-F3 LOW HAZARD LOW HUMAN OCCUPANCY. EXPOSURE CLASSIFICATION- EXPOSED
-CONFIRM ALL DIMENSIONS WITH SPITESPAN BUILDING SYSTEMS OF ONTARIO
-WALL NOT DESIGNED TO WITHSTAND EXCESSIVE IMPACT LOADING

CONCRETE:
-CONCRETE SHALL BE MINIMUM 30 MPa WITH 4% + 1% ENTRAINED AIR AND FIBRE MESH
-CONCRETE SHALL CONFORM TO C.P.S.S. 904 AND BE TESTED IN ACCORDANCE WITH C.P.S.S. 1356
-FORMWORK MUST BE LEFT IN PLACE FOR 24 HOURS AFTER CONCRETE PLACEMENT TO ALLOW FOR CURING.
-CONCRETE TEST MUST MEET 35 MPa PRIOR TO ERECTION OF REMAINING STRUCTURE.
-CONCRETE COMPOUND MUST BE ONSITE PRIOR TO PLACING CONCRETE AND
-CONTRACTOR MUST HAVE ADEQUATE TRAINED STAFF TO APPLY CURING COMPOUND.
-STRUCTURAL DESIGN HAS ACCOUNTED FOR AND WILL NOT BE AFFECTED ADVERSELY AT UNIFORM VERTICAL MOVEMENT OF THE STRUCTURE DUE TO FROST HEAVING OF THE SUBSOIL.

STEEL REINFORCEMENT:
-REINFORCING SHALL BE DEFORMED BARS WITH MINIMUM YIELD STRENGTH OF 400 MPa.

TITLE FOUNDATION DETAIL			
PROJECT REGIONAL MUNICIPALITY OF YORK 3525 BASELINE ROAD SUTTON, ON L0E 1R0			
DATE SEPT. 17.18	DRAWN BY GKH	CHECKED BY	REVISED

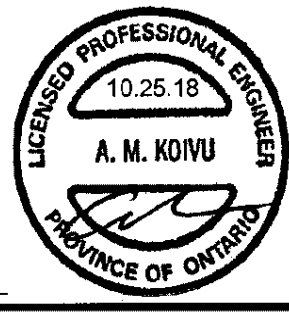

DESIGN CONCRETE SYSTEMS LIMITED
63 BIRCH STREET, BEAMSVILLE ONTARIO
N0R 1W0 CANADA
PHONE (416) 527-0367
FACSIMILE (519) 527-2325
designconcrete.ca

JOB NUMBER

DRAWING NUMBER
S2

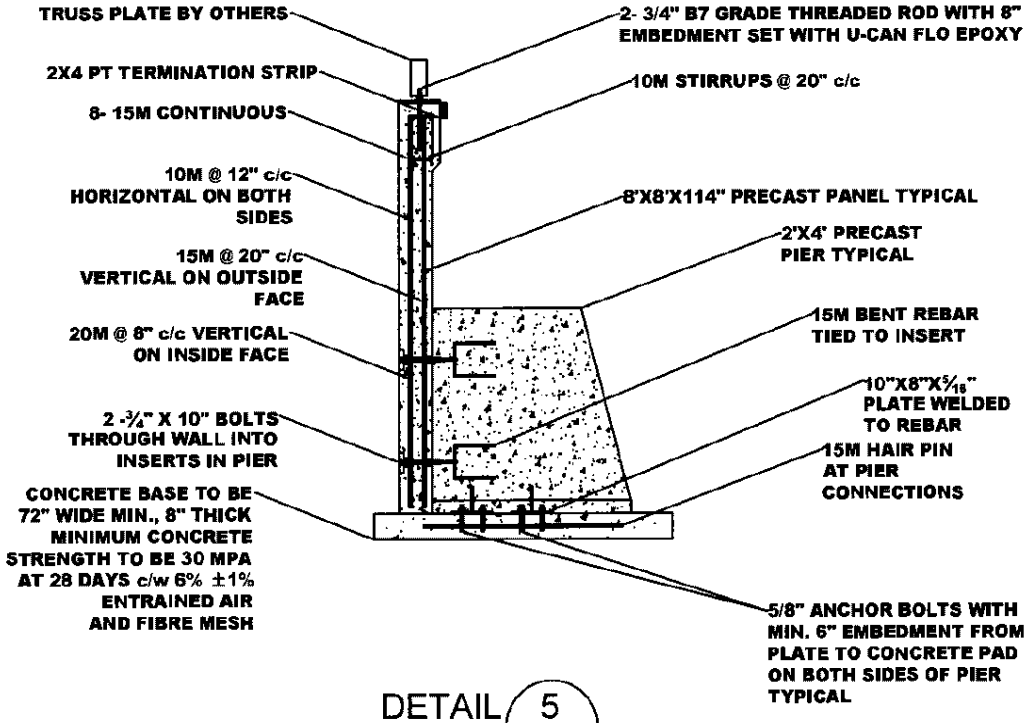

DETAIL 5 / S3

TITLE FOUNDATION DETAIL 5-S3			
PROJECT REGIONAL MUNICIPALITY OF YORK 3525 BASELINE ROAD SUTTON, ON L0E 1R0			
DATE SEPT 17.18	DRAWN BY GKH	CHECKED BY	REVISED

LICENSED PROFESSIONAL ENGINEER
10.25.18
A. M. KOIVU
PROVINCE OF ONTARIO

DESIGN CONCRETE SYSTEMS LIMITED
43 BIRCH STREET, SEAFORTH ONTARIO
N0K 1W0 CANADA
PHONE (519) 527-0367
FACSIMILE (519) 527-2328
designconcrete.on

JOB NUMBER

DRAWING NUMBER
S3

Pages 31 to / à 34

are not relevant

sont non pertinentes

Ontario

SECTOR COMP NCE BRANCH
Construction / Demolition

Site Location SALT STORAGE DOME - 3525 BASELINE RD. SUTTON WEST, LOEIRO 18/10/36 (yy mm dd)

GPS mE: _____ mN: _____ ____ : ____ am / pm

Company / Contractor

Legal Name: CNIT CONSTRUCTION INC. Site Supervisor: MICO ESKANAZI

Main Office Address: _____

Main Office Contact Name: _____ Phone Number: _____

Site Specific Information

Size of Project: 61 X 25 FT Type of Project: SALT STORAGE DOME - NORTH DISTRICT ROAD MAINTENANCE FACILITY

Completion Date: _____ Waste Contractor: _____

Ontario Regulation 102/94 – Waste Audit and Waste Reduction Work Plan

	Yes	No	Comments:
Has a Waste Audit been conducted?	☐	☐	
Has a written report of the WA been prepared?	☐	☐	WASTE
Does WA address the amount, nature and composition of waste?	☐	☐	NON CONSTRUCTION
Does WA address the manner by which waste gets produced, including management decisions / policies related to waste?	☐	☐	HASNT STARTED
Does WA address plans to RR&R waste as per Regulation?	☐	☐	
Has a written Waste Reduction Work Plan been prepared?	☐	☐	
Has the WRWP been implemented?	☐	☐	
Has the WRWP been posted on site where workers can see it?	☐	☐	
Is the plan available to workers upon request?	☐	☐	
Was the WA and WRWP prepared before construction began?	☐	☐	

Ontario Regulation 103/94 – S__ce Separation

Are the following materials separated on site?	Yes	No	Comments:
– Brick / Portland cement concrete	☐	☐	
– Cardboard (corrugated)	☐	☐	
– Drywall (unpainted)	☐	☐	
– Steel	☐	☐	
– Wood (except painted/treated/laminated)	☐	☐	

Notes

DC HUANG - DOING / TESTING TO CONFIRM BEARING CAPACITY / FOOTING - 4 TEST PITS - REPORT (SOIL) RESULTS WILL PROBABLY BE READY IN 2 WEEKS
- NO CONSTRUCTION - HAVENT STARTED
- UNIT CONSTRUCTION INC - 14 AUTOMATIC RD UNIT 32
BRAMPTON ON L6S5N5
905.793 7011
416.948.5458
RAMON CAMPOS - RAMON@UNITCONSTRUCTION.COM
TINO OWNER
- NICO ESKENAZI - SUPERINTENDENT
- NEED CONFIRMATION ON SIZE OF STRUCTURE - 61 X 25 FT SEEMS LIKE IS UNDER THRESHOLD

Inspected by:

Primary Officer: A DOMINGUEZ Secondary Officer: _____

Ministry of the Environment
Sector Compliance Branch

Officer Notes Cover Page

Officer: DOMINGUEZ, Anna Mae
Badge No. #1564

Company/Incident Noted: ONIT CONSTRUCTION INC.

Notes Date(s): OCTOBER 30, 2018

Notebook No(s): 4

Pages: 3-4

Anna Mae Dominguez
Provincial Officer #1564
Inspector
Sector Compliance Branch

Ontario

Ministry of the Environment
305 Milner Avenue, Suite 1000
Scarborough ON M1B 3V4
Tel: 416 314-1672
Fax: 416 314-4464
E-mail: AnnaMae.Dominguez@ontario.ca

Date	October 30, 2018
Time	900 - 930
Area	Sutton West
Weather	Sunny
Notes	Conducted an inspection of a construction site located at 3525 Baseline Rd, Sutton West. I met with Mr. Be Hwang of Terraprobe Consulting Engineers and Mr. Mico Eskenazi, Site Superintendent. According to Mr. Eskenazi, the Salt Storage Dome project is being undertaken by Onit Construction Inc. I discussed the reqts of O. Regs 102 & 103. Construction has not commenced. There were no wastes being generated. Based on the project plan presented by Mr. Hwang, the

Ministry of the Environment
Sector Compliance Branch

Officer Notes Cover Page

Officer: DOMINGUEZ, Anna Mae
Badge No. #1564

Company/Incident Noted: UNIT CONSTRUCTION INC.

Notes Date(s): OCTOBER 30, 2018

Notebook No(s): 4

Pages: 3 - 4

Anna Mae Dominguez
Provincial Officer #1564
Inspector
Sector Compliance Branch

Ontario

Ministry of the Environment
305 Milner Avenue, Suite 1000
Scarborough ON M1B 3V4
Tel: 416 314-1672
Fax: 416 314-4464
E-mail: AnnaMae.Dominguez@ontario.ca

project building structure is 61 x 25 ft. Confirmation is required to validate the size of the project to check if project is subject to the requirements of the Regulations. Mr. Hwang was on site collecting soil samples for testing to confirm the bearing capacity of the soil.

4

Pages 39 to / à 40

are withheld pursuant to section

sont retenues en vertu de l'article

22

of the Freedom of Information and Protection of Privacy Act

de la Freedom of Information and Protection of Privacy Act

Dominguez, Anna Mae (MECP)

From: Dominguez, Anna Mae (MECP)
Sent: October-29-18 10:30 AM
To: Butchart, Jeff (MECP); Dugas, Celeste (MECP)
Subject: Planned Inspection in Sutton West

Good morning Celeste and Jeff,

Please be advised that I will be conducting O. Reg. 102 and 103 inspections at the construction site listed below on Tuesday, October 30, 2018.

Salt Storage Dome at York Region's North District Road Maintenance Facility, 3525 Baseline Rd., Sutton West.

Please be informed that I may conduct inspections for other IC&I sub-sectors applicable to Regulations 102/103 not mentioned in this message. Kindly advise if you have any concerns regarding the sites.

Thank you,

Anna Mae M. Dominguez
Provincial Officer #1564
Environmental Enforcement and Compliance Office
Ministry of the Environment Conservation and Parks
305 Milner Avenue, Suite 1000
Scarborough, ON M1B 3V4
: 1-416-212-6666
: 1-416-314-4464
: Annamae.Dominguez@Ontario.ca

Responsive Event Report - File

Event Number: 1-EEK2X

Summary Information

Summary:	Hydro One: 250 L non-PCB suspect mineral oil to ground, cb
Type:	SPILLS
Report Method:	Phone
State:	Open
Status:	Compliance Review Underway
Date Created:	04/30/2021 00:38:52
Date Reported:	04/30/2021 00:12:05
Date Occurred:	04/29/2021 23:15:00
Created By:	Aaron
Assigned To:	MCNEICEMA
Program:	
Regulated Activity:	
Location:	
Municipality:	GEORGINA
District Office:	York Durham District Office
Response Type:	Desktop Response

Call Reports

Summary:	Hydro One: 250 L non-PCB suspect mineral oil to ground, cb
Report Details:	00:12 David Spence, Hydro One (416-557-3813) to SAC(ar) reporting a spill of approximately 250 L of non-PCB suspect transformer oil. David states a York Region public works dump truck accidentally took down the primary hydro line and 3 pole-top transformers at a public works yard. David states the oil has spilled to the asphalt parking lot and approximately half of the volume spilled has impacted 1 storm drain. David states a hydro crew is on site and has placed absorbent pads and booms as containment. David states GFL has been retained to perform clean-up and are expected on site in 1 hour. David will attempt to contact York Region to request they attend site and will contact SAC to provide an update.
Location:	3525 Baseline Road, Georgina
Created By:	RICHARDSAA

Reference #:	1-EEK1Y	**Municipality:**	
Date Created:	04/30/2021 00:17:26	**Date Reported:**	04/30/2021 00:12:05
Report Method:	Phone	**Date Occurred:**	04/29/2021 23:15:00
Outcome:	Responsive Event Created	**Name not Provided:**	N

Properties

ID:	1-EEK2L
Property Name:	
Municipality/County:	GEORGINA / REGIONAL MUNICIPALITY OF YORK
District Office:	York Durham District Office
Property Description:	Police Station

More Information

Was there a discharge/emission/spill of a contaminant to the natural environment?	Yes
Meets Criteria to Refer to TSSA:	No
Offsite Impacts:	No
Is this spill confirmed to be below the threshold for spills reporting exemption?	No
Receiving Environment:	Land
Has a Water Body been impacted?	No
Impacted Water Body/Watercourse:	
Initial Health & Environment Consequence:	Low
Final Health & Environment Consequence:	
MOE/Other Agencies Involved:	
Specify Agency Name:	

Can NAICS Code be determined?	Yes
NAICS Code:	221111
Spilled from Source:	Transformer
Specify Other:	
Activity During which Spill Occurred:	Normal operations
Specify Other:	
Incident Preceding Spill:	Accident/Collision
Specify Other:	
Contributing Causes:	
Specify process/unit/cause:	
Root Cause:	Human error (Specify)
Specify process/unit/cause:	

Cleanup Status:	Not Yet Initiated
Owner:	
Controller:	

Cleanup Report Provided:
Additional Report Provided:

Notes:

Created Date: 05/04/2021 08:18:03 **Locked Date:** 05/05/2021 08:18:03
Created By: DATEAK
Subject: update from Hydro One - monitoring
Details: David Spence, 416-557-3813, the pond was cleaned, but they will leave booms and pads in the area where the drainage outlet goes to the pond and monitor it regularly for the next week(s). They will change it them out as required.

Created Date: 04/30/2021 01:03:29 **Locked Date:** 05/01/2021 01:03:29
Created By: RICHARDSAA
Subject: Initial call
Details: Apr. 20, 2021
00:12 David Spence, Hydro One (416-557-3813) to SAC(ar) reporting a spill of approximately 250 L of non-PCB suspect transformer oil. David states a York Region public works dump truck accidentally took down the primary hydro line and 3 pole-top transformers at a public works yard. David states the oil has spilled to the asphalt parking lot and approximately half of the volume spilled has impacted 1 storm drain. David states a hydro crew is on site and has placed absorbent pads and booms as containment. David states GFL has been retained to perform clean-up and are expected on site in 1 hour. David will attempt to contact York Region to request they attend site and will contact SAC to provide an update.

Created Date: 04/30/2021 01:04:42 **Locked Date:** 05/01/2021 01:04:42
Created By: RICHARDSAA
Subject: Call to York Region
Details: Apr. 30, 2021
00:26 SAC(ar) to York Region, Joanne. Joanne states the spills team has been dispatched to site (Doug Ledlie (416-991-9172)). SAC(ar) requested an update regarding impact to storm drain and plan for clean-up.

Created Date: 04/30/2021 01:11:12 **Locked Date:** 05/01/2021 01:11:12
Created By: RICHARDSAA
Subject: SPIA
Details: Site is within Lakes Simcoe and Couchiching/Black River SPA, no concerns identified by SAC mapping.

Created Date: 04/30/2021 02:41:28 **Locked Date:** 05/01/2021 02:41:28
Created By: RICHARDSAA
Subject: Update from Hydro One
Details: 02:30 SAC(ar) to Hydro One, David Spence. David states that York Region spills response and GFL are currently on site. David states he still does not know where the impact catch basin discharges to and is waiting for an update from site. David states he will update SAC when he receives an update from site.

Created Date: 04/30/2021 02:43:35 **Locked Date:** 05/01/2021 02:43:35
Created By: RICHARDSAA
Subject: Update from York Region
Details: 02:32 SAC(ar) to York Region, Doug Ledlie. Doug states that the impact storm drain flows to an on-site storm water management pond. Doug states there is visible impact at the inlet to the pond and cannot confirm if any oil has left the pond at the outlet. Doug states that the pond eventually drains to the roadside ditch. Doug states there is a vacuum truck on site that is blocking the inlet to the pond and they are working to construct a barricade at the outlet. Doug states the plan is to secure containment and initiate clean-up in the morning. SAC(ar) advised of the Region's obligation to initiate clean-up as soon as possible in order to minimize potential of further migration. Doug states he will seek approval to retain a contractor to initiate clean-up tonight and will provide an update to SAC.

Created Date: 04/30/2021 03:15:36 **Locked Date:** 05/01/2021 03:15:36
Created By: RICHARDSAA
Subject: Update from York Region/GFL
Details: 03:09 Doug Ledlie, York Region to SAC(ar) advises that GFL are on site assessing the impact and forming a remediation plan, phone passed to GFL, Bill Read (905-261-8061). Bill states that GFL will wash and potentially dig out the initial spill area, vacuum and wash out the impacted cb, and skim and placed booms in the storm water management pond. Bill states a vacuum truck is expected on site at 03:30 to begin skimming and that the majority of the impact appears to be contained to the pond. Bill states he will remain on site for the duration of the clean-up and will provide updates to SAC.

Created Date: 04/30/2021 06:38:50 **Locked Date:** 05/01/2021 06:38:50
Created By: RICHARDSAA
Subject: Hydro One Update
Details: 06:35 David Spence, Hydro One to SAC(ar). David states that the extent of the impact has been contained to the storm water pond. David states GFL will be on site throughout the day today performing clean-up. David states he will

provide an update once clean-up is complete or advise if clean-up will continue into tomorrow.

Created Date: 04/30/2021 09:07:13 **Locked Date:** 05/01/2021 09:07:13
Created By: DATEAK
Subject: SAC to MECP-YD
Details: SAC briefed Duty Officer Roddy

Created Date: 04/30/2021 13:45:22 **Locked Date:** 04/30/2021 13:46:03
Created By: HARRISMA2
Subject: GFL EGR request
Details: 1341h GFL [Garth Bridgeman 905-926-3820] requesting EGR
1-EEK1Y
Manifest # MX348977-4
Waste Class 251 I
Volume: 8000 L
Carrier # A840849
Receiver # A390323

ONS0306

Created Date: 04/30/2021 17:55:13 **Locked Date:** 04/30/2021 17:57:57
Created By: WEISSJE
Subject: Hydro One updating clean up status
Details: 1751
Hydro One (David Spence) to SACjw
-Updating GFL has cleaned the parking lot, removed impacted soils at base of the pole and have skimmed the SWMP behind the Public Works building using a vacuum truck.
-Booms deployed at SWMP inlet and outlet as a precaution and they will be checked on Monday/Tuesday for replacement/removal as necessary.

Attachments

Name: DRAFT 1-EEK2X Responsive Event - File
Serial Number: 1-EEK2X-1
Date Modified: 04/30/2021 10:14:18
URL:
Summary:
Description:

Entities

Organization Type:	Private Business	**ID:**	1-6WQS0
Operating Name:	HYDRO ONE INC.		
Legal Name:	HYDRO ONE INC.		
Address:	483 BAY ST, TORONTO, ON, M5G 2P5		

Organization Type:	Government, Municipal	**ID:**	1-4UUQM
Operating Name:	YORK REGION		
Legal Name:	THE REGIONAL MUNICIPALITY OF YORK		
Address:	17250 YONGE ST, NEWMARKET, ON, L3Y 4W5		

Contaminants

Contaminant Name:	TRANSFORMER OIL (N.O.S.)		
Description:			
UN#:		**CAS#:**	
Material Type:			
Quantity:	250 litre (L)		
Number of Exceedances:			
Min. Quantity:			
Max. Quantity:			
Frequency:			
Other Frequency:			
Start Date/Time:			
End Date/Time:			
Non-Compliance Type:			
Approval# / Permit# / Legislation:			
Method:			
Limit:			
Limit Type:			
Limit Measurement:			

Responsive Event Report - File

Event Number: 1-EEK2X

Summary Information

Summary: Hydro One: 250 L non-PCB suspect mineral oil to ground, cb	
Report Method: Phone	**Reported By:** DAVID SPENCE
Type: SPILLS	**Program:**
Priority:	
Created By: Aaron Richards, RICHARDSAA	
Date Created: 04/30/2021 00:38:52	**Date Occurred:**
Date Reported: 04/30/2021 00:12:05	**Assigned To:** DATEAK
Triage Total: 6 **Triage Response Level:** Low	**Ministry Response Type:** Desktop Response
State: Open	**Status:** Compliance Review Underway
Municipality: GEORGINA	**District/Area Office:** York Durham District Office

Call Reports

Reference #: 1-EEK1Y	**Report Method:** Phone
Summary: Hydro One: 250 L non-PCB suspect mineral oil to ground, cb	
Detailed Report: 00:12 David Spence, Hydro One (416-557-3813) to SAC(ar) reporting a spill of approximately 250 L of non-PCB suspect transformer oil. David states a York Region public works dump truck accidentally took down the primary hydro line and 3 pole-top transformers at a public works yard. David states the oil has spilled to the asphalt parking lot and approximately half of the volume spilled has impacted 1 storm drain. David states a hydro crew is on site and has placed absorbent pads and booms as containment. David states GFL has been retained to perform clean-up and are expected on site in 1 hour. David will attempt to contact York Region to request they attend site and will contact SAC to provide an update.	
Date Occurred: 04/29/2021 23:15:00	**Date Reported:** 04/30/2021 00:12:05
Date Created: 04/30/2021 00:17:26	**Created By:** RICHARDSAA
Outcome: Responsive Event Created	**Anonymous:** N
Location: 3525 Baseline Road, Georgina	**Municipality:**

More Information

Was there a discharge/emission/spill of a contaminant to the natural environment? Yes	
Meets Criteria to Refer to TSSA: No	**Offsite Impacts:** No
Is this spill confirmed to be below the threshold for spills reporting exemption? No	
Receiving Environment: Land	
Has a Water Body been impacted? No	
Impacted Water Body/Watercourse:	
Initial Health and Environment Consequence: Low	
Final Health and Environment Consequence:	
MOE/Other Agencies Involved:	
Specify Agency Name:	
Can NAICS Code be determined? Yes	**NAICS Code:** 221111
Spilled from Source: Transformer	
Specify Other:	
Activity During which Spill Occurred: Normal operations	
Specify Other:	

Incident Preceding Spill: Accident/Collision	
Specify Other:	
Contributing Causes:	
Specify process/unit/cause:	
Root Cause: Human error (Specify)	
Specify process/unit/cause:	
Cleanup Status: Not Yet Initiated	
Owner:	
Controller:	
Cleanup Report Provided:	
Additional Report Provided:	

Notes

Created Date: 04/30/2021 01:03:29	**Created By:** RICHARDSAA
Subject: Initial call	
Details: Apr. 20, 2021 00:12 David Spence, Hydro One (416-557-3813) to SAC(ar) reporting a spill of approximately 250 L of non-PCB suspect transformer oil. David states a York Region public works dump truck accidentally took down the primary hydro line and 3 pole-top transformers at a public works yard. David states the oil has spilled to the asphalt parking lot and approximately half of the volume spilled has impacted 1 storm drain. David states a hydro crew is on site and has placed absorbent pads and booms as containment. David states GFL has been retained to perform clean-up and are expected on site in 1 hour. David will attempt to contact York Region to request they attend site and will contact SAC to provide an update.	
Locked by Officer Date:	**Locked by System Date:**

Created Date: 04/30/2021 01:04:42	**Created By:** RICHARDSAA
Subject: Call to York Region	
Details: Apr. 30, 2021 00:26 SAC(ar) to York Region, Joanne. Joanne states the spills team has been dispatched to site (Doug Ledlie (416-991-9172)). SAC(ar) requested an update regarding impact to storm drain and plan for clean-up.	
Locked by Officer Date:	**Locked by System Date:**

Created Date: 04/30/2021 01:11:12	**Created By:** RICHARDSAA
Subject: SPIA	
Details: Site is within Lakes Simcoe and Couchiching/Black River SPA, no concerns identified by SAC mapping.	
Locked by Officer Date:	**Locked by System Date:**

Created Date: 04/30/2021 02:41:28	**Created By:** RICHARDSAA
Subject: Update from Hydro One	
Details: 02:30 SAC(ar) to Hydro One, David Spence. David states that York Region spills response and GFL are currently on site. David states he still does not know where the impact catch basin discharges to and is waiting for an update from site. David states he will update SAC when he receives an update from site.	
Locked by Officer Date:	**Locked by System Date:**

Created Date: 04/30/2021 02:43:35	**Created By:** RICHARDSAA
Subject: Update from York Region	
Details: 02:32 SAC(ar) to York Region, Doug Ledlie. Doug states that the impact storm drain flows to an on-site storm water management pond. Doug states there is visible impact at the inlet to the pond and cannot confirm if	

any oil has left the pond at the outlet. Doug states that the pond eventually drains to the roadside ditch. Doug states there is a vacuum truck on site that is blocking the inlet to the pond and they are working to construct a barricade at the outlet. Doug states the plan is to secure containment and initiate clean-up in the morning. SAC(ar) advised of the Region's obligation to initiate clean-up as soon as possible in order to minimize potential of further migration. Doug states he will seek approval to retain a contractor to initiate clean-up tonight and will provide an update to SAC.

Locked by Officer Date:	**Locked by System Date:**

Created Date: 04/30/2021 03:15:36	**Created By:** RICHARDSAA
Subject: Update from York Region/GFL	
Details: 03:09 Doug Ledlie, York Region to SAC(ar) advises that GFL are on site assessing the impact and forming a remediation plan, phone passed to GFL, Bill Read (905-261-8061). Bill states that GFL will wash and potentially dig out the initial spill area, vacuum and wash out the impacted cb, and skim and placed booms in the storm water management pond. Bill states a vacuum truck is expected on site at 03:30 to begin skimming and that the majority of the impact appears to be contained to the pond. Bill states he will remain on site for the duration of the clean-up and will provide updates to SAC.	
Locked by Officer Date:	**Locked by System Date:**

Created Date: 04/30/2021 06:38:50	**Created By:** RICHARDSAA
Subject: Hydro One Update	
Details: 06:35 David Spence, Hydro One to SAC(ar). David states that the extent of the impact has been contained to the storm water pond. David states GFL will be on site throughout the day today performing clean-up. David states he will provide an update once clean-up is complete or advise if clean-up will continue into tomorrow.	
Locked by Officer Date:	**Locked by System Date:**

Created Date: 04/30/2021 09:07:13	**Created By:** DATEAK
Subject: SAC to MECP-YD	
Details: SAC briefed Duty Officer Roddy	
Locked by Officer Date:	**Locked by System Date:**

Entities

ID: 1-6WQS0	**Organization Type:** Private Business
Operating Name: HYDRO ONE INC.	**Legal Name:** HYDRO ONE INC.
Address: 483 BAY ST, TORONTO, ON, M5G 2P5	

ID: 1-4UUQM	**Organization Type:** Government, Municipal
Operating Name: YORK REGION	**Legal Name:** THE REGIONAL MUNICIPALITY OF YORK
Address: 17250 YONGE ST, NEWMARKET, ON, L3Y 4W5	

Properties

ID: 1-EEK2L	**Property Name:**
Municipality/County: GEORGINA / REGIONAL MUNICIPALITY OF YORK	**District/Area Office:** York Durham District Office

Property Description: Police Station

Worksheets

Contaminants

Contaminant Name: TRANSFORMER OIL (N.O.S.)	
Description:	
UN#:	**CAS#:**
Material Type:	**Quantity:** 250
Units: litre (L)	

Ontario

Ministry of the Environment
Ministère de l'Environnement

INCIDENT REPORT

Reference Number:	2648-993T7D	**File Storage Number:**	SPILLS ACTION CENTRE
Module:	Incident Reporting	**Module Type:**	Spill
Cross Reference:	(doc link)	**Task Link:**	1486-993TBY
Originating Document:		**Created by:**	John Tirone
Incident Report Reference Number:		2648-993T7D	
Date Created:	2013/06/27	**Date Completed:**	2013/08/24
Bring Forward Date:		**Bring Forward Reason:**	
Status:	Closed		
Program	Air	**Activity:**	Spills

Is this an **air emission** (measured or modelled) or **wastewater** (sewage) **discharge exceedance** that will become part of the Environmental Compliance Report?

(legislation, certificate of approval, order, or guideline)

○ Yes ● No ○ To be determined ***Click here for Guidance***

Caller or PO Information

Reported By:		**Name of Company:**	
First Name Denny	**Last Name** Hughes	Enbridge	
Contact Mailing Address			
Civic Address:			**Unit Identifier:**
101 Honda			
Delivery Designator:			**Delivery Identifier:**
Municipality:	**Postal Station:**	**Province/State:**	**Postal Code:**
Markham		Ontario	
Telephone Number:	**Extension:**	**Other Number:**	**Email Address:**
(416)476-4205		**Fax**	

Reported By:	

MOE Information

Date & Time Reported to MOE:	2013/06/27 17:28		
Office Receiving Incident Report:	Spills Action Centre		
Incident Info Received By:	John Tirone		
MOE Response:	Referral to others	**Site Region:**	Central
Date & Time of MOE Arrival at Scene:			
Master Incident Report Number:			
SAC Action Class:			

	Air Spills - Gases and Vapours		
Non-Standard Procedure:	No		
ERP Call-out Initiated:	No		

Client(s)

Client Details

Site(s)

Site Details
Field<UNOFFICIAL> Address: Lot: , Part: , 3525 Baseline Rd, Georgina, Town, Regional Municipality of York District Office: York-Durham

Incident Information

Incident Summary:	Enbridge, 1 inch EHP, hit by tractor *cannot be longer than 60 characters*
Incident Description:	Caller reports a line strike to a 1 inch Extra HP. The strike is due to a tractor hitting a farm tap. The Tracktor was being operated by York Region (Murray Pattenden 905-955-0643 SUpervisor, Enbridge onsite at 16:15, The call was not called in as a damage at the time not until 15:21 danmage was discovered. Onsite 16:15, Made safe 16:40. No injuries. Pol;ice and FD were onsite. Incident report for Police is #13-175819 Copy of report sent to TSSA FSB

Links & Comments:	
Attachments Names:	

Date & Time of Incident	**Incident Date Confirmation?** Actual 2013/06/27 15:12		
Source Type:	Pipeline/Components	**Sector Type:**	Unknown / N/A
Nearest Watercourse:		**Watershed Category Code:**	
Environmental Impact:	Not Anticipated		
Nature of Impact:	Air Pollution		
Incident Event:	Unknown / N/A	**Incident Reason:**	Unknown / N/A
Damaged Party:	No		

Contaminants Table

Contaminant Name	Code	UN#	Limit	Quantity	[units]	[freq]
NATURAL GAS (METHANE)	35	1075		0	other - see incident description	n/a

Controller of Material:		**Owner of Material:**	
Estimated Clean Up Cost:		**Who Cleaned Up:**	
% Clean Up:	%	**MOE/Other Agencies Involved:**	Provincial Agency - Technical Standards & Safety Authority

Voluntary / Mandatory Abatement

Is there Voluntary Abatement Activity?	○ Yes ○ No ○ To be determined

Voluntary / Mandatory Compliance Items

Type	Parent RefNo	Work Summary (may be truncated)	Date	AttainList

Offence(s)

Suspected Violation(s)/Offence(s):	
Act - Regulation - Section, Description {General Offence}	

Provincial Officer:

Name: John Tirone
Badge No:

Work Unit:
District/Area Office: Spills Action Centre
Date: 2013/06/27

Signature:

Supervisor Planning and Response:

Name: Bruce Carlin

Work Unit:
District/Area Office:
Date: 2013/08/24

Signature:

Ontario

Ministry of the Environment and Climate Change
Ministère de l'Environnement et de l'Action en matière de changement climatique

INCIDENT REPORT

Reference Number:	1645-AR7SJR	**Module Type:**	Spill
Status:	Closed	**File Storage Number:**	SPILLS ACTION CENTRE
Program:	Air	**Activity:**	Spills

Caller or PO Reporting/Receiving Information

First Name:	**Last Name:**
Rodney	Smallwood
Name of Company:	
Enbridge Gas	

MAILING ADDRESS			
Civic Address:		**Unit Identifier:**	
Delivery Designator:		**Delivery Identifier:**	
Municipality/ Unorganized Twp:	**County/District:**	**Province/State:**	**Postal Code:**
		Ontario	
Postal Station:		**Country:**	Canada
Telephone Number:	**Extension:**	**Other Number:**	**Email Address:**
416-819-1627		**Fax**	

Date Reported to MOE:	2017/09/14	**Time Reported to MOE:**	16:55

Date of Incident:	2017/09/14	**Time of Incident:**	13:35
Incident Date Confirmation:	Actual		

Client(s)

Client Details
Enbridge Gas Distribution Inc. Mailing Address: 101 Honda Blvd, Markham, Ontario, Canada, L6C 0M6 Physical Address: 101 Honda Blvd, Markham, City, Regional Municipality of York, Ontario, Canada, L6C 0M6 Telephone: (905)927-3176

Client #: 3471-9WYRTQ, Client Type: Corporation

Site(s)

Site Details
York Regional Police and Works Yard<UNOFFICIAL> Address: Lot: , Part: , 3525 Baseline Road, Sutton, Georgina, Town, Regional Municipality of York District Office: York-Durham

Incident Summary:
TSSA FSB; 1¼ pl IP service line damaged; made safe

Initial Incident Description (as reported):
Created: Caryn MacLoghlin (Spills Action Centre) - 2017/09/14 04:55:35 PM
Caller reports damage of 1¼-inch plastic IP service line by a contractor (Pete Rivers, 905-716-9371) working on behalf of the region. The contractor struck the line with a backhoe. He had valid locates but did not hand dig to expose the line before digging with the backhoe. No police or FD onsite in an official capacity. No injuries, evacuations or media. Enbridge received the call at 13:35, arrived onsite at 14:30 and area made safe at 14:33. Repairs are underway and should be complete by the time of the call. Service lost only to the one user. Emailed copy of report to TSSA-FSB

SAC Action Class:	TSSA - Fuel Safety Branch - Hydrocarbon Fuel Release/Spill
Non-Standard Procedure:	No

Incident Description:
Last update: Caryn MacLoghlin (Spills Action Centre) - 2017/09/14 05:05 PM
see above

Incident Description Continuation:

Incident Update:

Was there an MOE field response?	No
Were there samples collected / analyzed at any time?	No
Known or Suspected Health / Environmental Consequence at the Time of Incident	
Health / Environmental Consequence:	2 - Minor Environment

Has a Water Body been impacted?	No
Receiving Environment:	Air
Incident Event:	Leak/Break
Incident Reason:	Operator/Human Error
Source Type:	Pipeline/Components
Sector Type:	Unknown / N/A
MOE/Other Agencies Involved:	Provincial Agency - Technical Standards & Safety Authority
Was there a discharge / emission / spill of a contaminant to the environment?	
Yes	

Contaminants Table

Contaminant Name	Description	Code	UN#	Limit	Quantity	[units]	[freq]
NATURAL GAS (METHANE)		35	1075		0	other - see incident description	

Environmental Compliance Reporting (ECR)

Is this an air emission (measured or modelled) or wastewater (sewage) discharge exceedance that will become part of the Environmental Compliance Report? **(legislation, certificate of approval, order, or guideline)**
No

Voluntary / Mandatory Abatement

Was there Non-Compliance/Non-Conformance Identified?	◯ Yes ◯ No

Voluntary / Mandatory Compliance Items

Type	Parent RefNo	Work Summary (may be truncated)	Date	AttainList

Waste / EGR Information

Waste / EGR Information entries:

Document Related Information

Cross Reference:	(doc link)	**Task Link:**	3247-AR7SRF

Originating Document:		**Created by:**	Caryn MacLoghlin
Date Created:	2017/09/14	**Date Completed:**	2017/10/21
Office Receiving Incident Report:	Spills Action Centre	**Incident Info Received By:**	Caryn MacLoghlin
Bring Forward Date:		**Bring Forward Reason:**	

Signatures

Provincial Officer:

Name:	**Caryn MacLoghlin**
Badge No:	
Work Unit:	
District/Area Office:	**Spills Action Centre**
Date:	**2017/09/14**
Signature:	

Supervisor Planning and Response:

Name:	**Bruce Carlin**
Work Unit:	
District/Area Office:	
Date:	**2017/10/21**
Signature:	

Ontario

Ministry of the Environment, Conservation and Parks
Ministère de l'Environnement, de la Protection de la nature et des Parcs

INCIDENT REPORT

Reference Number:	4620-BYLSHG	**Module Type:**	Spill
Status:	To be assigned	**File Storage Number:**	
Program:	Water - Ground & Surface	**Activity:**	Spills

Caller or PO Reporting/Receiving Information

First Name:	**Last Name:**
Amir	Brad
Name of Company:	
Rufat	

MAILING ADDRESS			
Civic Address:		**Unit Identifier:**	
Delivery Designator:		**Delivery Identifier:**	
Municipality/ Unorganized Twp:	**County/District:**	**Province/State:**	**Postal Code:**
		Ontario	
Postal Station:		**Country:**	Canada
Telephone Number:	**Extension:**	**Other Number:**	**Email Address:**
416-677-4343		**Fax**	

Date Reported to MOE:	2021/02/26	**Time Reported to MOE:**	15:53

Date of Incident: **Incident Date Confirmation:**	2021/02/26 Actual	**Time of Incident:**	15:43

Client(s)

Client Details

Site(s)

Site Details
Site<UNOFFICIAL> Address: Lot: , Part: , 3525 Baseline Road, Georgina, Town, Regional Municipality of York District Office: York-Durham GeoReference: Map Datum: , Zone: 17, Method: , UTM Easting: 625555.18, UTM Northing: 4905216.93, UTM Location Description: ,

Incident Summary:
Rufat Contracting: 1800L of brine to cb

Initial Incident Description (as reported):

Created: Maria Povarova (Spills Action Centre) - 2021/02/26 03:53:30 PM

1541 Amir Brad, 416-677-4343, Rufat General contract – fleet manager to SACmp: Requesting info on spill reporting: If there is a spill of brine to a cb, does that need to be reported. SACmp advised that spills to waterways need to always be reported regardless of volume, even if except. Upon questioning, it was determined that they did infact have a spill.

Also on the line: Zaid Madanat, 647-325-5720, Rufat General Contracting. (general manager).

They had a spill from a truck of de-icing brine, they pick it up from York region (York region has the sds, they only supply the truck and operator)

Occurred now (few mins ago).
Location: 3525 Baseline Road, Georgina/Keswick. Shared yard between OPP and York region public works yard.

Mechanic was testing the truck, but it spilled it.
Approximately 1800L spilled into the catch basin on site.
It is their truck that caused the spill.
They do not know where the catch basin leads.

York region public works is aware. They just advised to notify SAC, according to the caller. No other info on cleanup or response from york from the caller.

Cleanup: they stopped the leak, put filter cloth and socks, covered the cb. They contained it to the area. They have a vacc truck on the way – Shane wattlebaker coming with Rufat (they have their own vac trucks). No eta at this time.

SACmp inquired if York will attend and look at the cb, where it leads, downstream concerns, and SDS concentration of the brine. Caller call back SAC.

Caller asked how they would know if its cleaned – SACmp advised a cleanup contractor may be required if they are unable to make the determination. SACmp provided contact for: Accuworx, Pario, and Qm.

York region contact they have spoken to, Miles 905-505-0975

Caller said he will next call back miles, and will be calling York again next.

15:51 York Region (Myles McMillan 905-505-0975) to SAC(sm): reports that Rafat General Contracting spilled 1800L of brine, i.e. 23% salt water solution, which made its way to a double cb on 3525 Baseline Rd., Sutton. Caller says that the cb goes underneath their facility to a small retention pond which discharges into a ditch that runs east-west on Baseline Rd., which then leads to Lake Simcoe. The contractor is proposing to flush the system with 40,000 L of water. Caller is unsure if this is an appropriate solution and says that he told them to notify MECP. He believes that the contractor may not report it and try to hide the spill. SAC(sm) asked if he will be following up on response, caller said that he will be off shift but he will ask the on-call to check on spill response. SAC(sm) confirmed that Rafat reported to SAC.

Rafat General Contracting Contacts: Operations Manager (Zaid Madanat 647-325-5720) / H&S Manager (Dia Hussein 416-453-2059)

1611 SACmp to York Durham: Lindsay: Briefed. Will let area eo know and supervisor. SAC to update if any substantial updates received before 5.

1618 Amir to SACmp: Updates that the vacc truck will arrive just before 18:00. Caller then brought in:
Ahmed and Andrew, the environmental consultants:

Ahmed, Azurd Group, 416-779-2694:
Andrew, Azurd Group, 416-452-6965;

"This happened to them before, they have done it many times before, "but different way". When SACmp inquired as to what exactly this meant, what sort of spills and how, the answer was avoided.

Rufat, instructed them that they are sending a vac truck to vacc out the cb. Their concern is that, if they sample wont give them that much new information, as there is already a lot of salt in the cbs, from other applications.
They want to do as much as in the moment as necessary. They want to make an agreement with MECP. They are looking for concrete guidance of exactly what do to. They don't know where to get plans from, asked SACmp where they can get plans for the cb's and sewers. SACmp stated this is information that SAC does not have, then one of them stated they will ask York region. SACmp again verified their position and the company, they did say they are the environmental consultants, and one of the callers states they are both QP's and are registered with MOE.

SACmp advised it needs to be cleaned forthwith, and their plan of action. They said they will take samples upstream, and at the cb to determine a baseline level. They will arrive on site soon. Drop it to lab today. SACmp inquired how long that would take - several days. SACmp again stated in needs to be cleaned forthwith, thats when callers asked if SAC is requesting results to be rushed? SACmp re-iterated this needs to be cleaned up to pre-spill conditions as soon as practicable.

Andrew: spoke to York region, stated that the cb leads to simcoe lake eventually. SACmp also requested SDS.

SAC Action Class:	
Non-Standard Procedure:	No

Incident Description:

Last update: Maria Povarova (Spills Action Centre) - 2021/02/26 10:30 PM

16:30 SACmp ITT 3+2+3+2+1+2+0+0 = 13, with light grey, med

1633 SACmp to York Durham DO: Linday: Briefed on concerns, SACmp advised considering erp based on the questionable conversation and response both from rufat and their environmental consultants. Lindsay to update SAC, will run ir by the sup.

1700 Lindsay Fruan, YD DO to SACmp: called supervisor, did not head back. Did send an email to sup, cc'd tonight oncall, but SAC to determine ongoing response.

1706, SACMp to York Region, Miles: Contractor that that caused the spill, just spoke to him. Gave him retention pond it leads to. Caller states it is isolated to the retention pond. Caller also states soap socks, and woodchips at the outlet of the retention pond at the outfall as additional precautions, though may not help very much.
York region is hands off, they will let the contractor do the cleanup, and would only step in if things are not being cleaned. SACmp inquired about the response, and if they are happy with it so far, caller states for now these is progress, though did state in the past they have not been the best to deal with and do cut corners.

Site contact at yard: Lead operator: Ken Morrelle, 905-955-6111. Another staff may attend as well if not cleaned up by then.

1727 SACmp to York Region ERP, Karen Wiltshire: switched erp for the whole week. Phil dunn is the erp for the week now.

1730 SACmp to York Region ERP, Philip Dunn: Paged. Will reach out to some of the contacts from home prior to any additional response. SAC to be updated.

19:13 Philip Dunn, ERP to SACmp: Spoken to onsite staff, will attend to take a look. They will try to access the small pond if the can vacc it out a little bit. They will update ERP when they do that. They did inform him that the consultant onsite that there is a lot of salt onsite anyway, so that this amount wont noticeably change levels in the pond. Will also notify local eo as well later on, in regards to future storm water management. ERP will notify SAC when ticket required. ETA – 1/2h.

2018 Philip Dunn: on route to site, eta 1.5 hours to site. Tracking ticket started.

22:23 Philip Dunn to SACmp: Arrived onsite at 21:30, and took a look around with staff onsite. Based on the observations there is nothing to recover. There are two ponds, both frozen. It would have mixed with the pond. District will follow up with region for storm water controls into the future, with the local EO.
The cb that was impacted was pumped out. The works yard has the main storage in the area. There is a significant amount of salt going into this area normally.
The area is a two pond system, first pond goes to a drainage ditch, and another distance to the next one. There is no outflow from the first pond. Headed back to the office shorly.

Latitude:44.28936 Longitude:-79.42631
UTM Zone:17 Easting:625555.18 Northing:4905216.93
Upper Tier Municipality: REGIONAL MUNICIPALITY OF YORK
Lower/Single Tier Municipality: TOWN OF GEORGINA
Township Concession and Lot: NORTH GWILLIMBURY , null
Assessment Parcel Address: N/A
Assessment Roll #: N/A
MECP District: York-Durham
MECP Region: Central
Source Protection Details for Location

Source Protection Area.Lakes Simcoe and Couchiching/Black River
Wellhead Protection Area:No ; score is
Wellhead Protection Area E (GUDI):No ; score is
Intake Protection Zone:No ; score is
Issue Contributing Area:No ; Contaminant:
(Click here to search by chemical and show other threats for this location.)
Significant Groundwater Recharge Area:No ; score is
Highly Vulnerable Aquifer:No ; score is
Event Based Area: No for type:
Wellhead Protection Area Q1: No ; Stress:
Wellhead Protection Area Q2: No ; Stress:
Intake Protection Zone Q: No

Incident Description Continuation:

Incident Update:
Marc Lamirande (Spills Action Centre) - 2021/03/01 created; 2021/03/01 last update : March 1 2021 0945 SAC(ML) ECCC requested copy of report; emailed.

Was there an MOE field response?	Yes
Site Visit (other than inspection or ERP Response):	

Inspection:			
ERP Response:		Yes	
ERP Name:			
ERP Call-Out Date:	2021/02/26	**ERP Call-Out Time:**	17:30
Date of Arrival at Site:		**Time of Arrival at Site:**	
Were there samples collected / analyzed at any time?		No	
Known or Suspected Health / Environmental Consequence at the Time of Incident			
Health / Environmental Consequence:		4 - Medium Environment	

Has a Water Body been impacted?	No
Receiving Environment:	Land
Incident Event:	Leak/Break
Incident Reason:	Operator/Human Error
Source Type:	Truck - Tanker
Sector Type:	Miscellaneous Communal
MOE/Other Agencies Involved:	Municipal - Works/Utilities Department, Province - MOE-District Office
Was there a discharge / emission / spill of a contaminant to the environment?	
Yes	

Contaminants Table

Contaminant Name	Description	Code	UN#	Limit	Quantity	[units]	[freq]
BRINE WATER		46	n/a		1800	L	

Environmental Compliance Reporting (ECR)

Is this an air emission (measured or modelled) or wastewater (sewage) discharge exceedance that will become part of the Environmental Compliance Report? **(legislation, certificate of approval, order, or guideline)**
No

Voluntary / Mandatory Abatement

Was there Non-Compliance/Non-Conformance Identified?	◯ Yes ◯ No

Voluntary / Mandatory Compliance Items

Type	Parent RefNo	Work Summary (may be truncated)	Date	AttainList

Waste / EGR Information

Waste / EGR Information entries:

Document Related Information

Cross Reference:	(doc link)	**Task Link:**	1658-BYLTEV
Originating Document:		**Created by:**	Maria Povarova
Date Created:	2021/02/26	**Date Completed:**	
Office Receiving Incident Report:	Spills Action Centre	**Incident Info Received By:**	Maria Povarova
Bring Forward Date:		**Bring Forward Reason:**	

Signatures

Provincial Officer:

Name: **Badge No:** **Work Unit:** **District/Area Office:** **Date:** **Signature:**	

District/Area Supervisor:

Name: **Work Unit:** **District/Area Office:** **Date:** **Signature:**	

Ontario

Ministry of the Environment and Climate Change
Ministère de l'Environnement et de l'Action en matière de changement climatique

INCIDENT REPORT

Reference Number:	8340-ALQKRS	**Module Type:**	Spill
Status:	Closed	**File Storage Number:**	SPILLS ACTION CENTRE
Program:	Air	**Activity:**	Spills

Caller or PO Reporting/Receiving Information

First Name:	**Last Name:**
Rod	Smallwood
Name of Company:	
Enbridge Gas	

MAILING ADDRESS			
Civic Address:		**Unit Identifier:**	
Delivery Designator:		**Delivery Identifier:**	
Municipality/ Unorganized Twp:	**County/District:**	**Province/State:**	**Postal Code:**
		Ontario	
Postal Station:		**Country:**	Canada
Telephone Number:	**Extension:**	**Other Number:**	**Email Address:**
(416)819-1627			

Date Reported to MOE:	2017/04/24	**Time Reported to MOE:**	11:08

Date of Incident:	2017/04/24	**Time of Incident:**	10:41
Incident Date Confirmation:	Actual		

Client(s)

Client Details
Enbridge Gas Distribution Inc. Mailing Address: 101 Honda Blvd, Markham, Ontario, Canada, L6C 0M6 Physical Address: 101 Honda Blvd, Markham, City, Regional Municipality of York, Ontario, Canada, L6C 0M6 Telephone: (905)927-3176

Client #: 3471-9WYRTQ, Client Type: Corporation

Site(s)

Site Details
Region of York - Maintenance<UNOFFICIAL> Address: Lot: , Part: , 3525 Baseline Road, Georgina, Town, Regional Municipality of York District Office: York-Durham

Incident Summary:
TSSA FSB: 1.25" P IP, safe, no media/evac, FD on scene

Initial Incident Description (as reported):
Created: Tyler Philp (Spills Action Centre) - 2017/04/24 11:08:19 AM
1106 Enbridge to SACtp: Rodney called to report a damged 1 1/4" plastic IP service line. The line was made safe at 1041 hrs. There were no injuries, evacuation, or police presence. The fire department did attend the scene. The damage was cause by the subcontractor working on behalf of York Region, Blair Emmerson (647-961-0358). The damage was cause by a backhoe. There were no locates completed for the work location, but locates were in the process of being done at the time of the strike. the site Supervisor is Raymond Yule (905-955-0125) with York Region.

SAC Action Class:	TSSA - Fuel Safety Branch - Hydrocarbon Fuel Release/Spill
Non-Standard Procedure:	No

Incident Description:
Last update: Tyler Philp (Spills Action Centre) - 2017/04/24 11:42 AM
N/A

Incident Description Continuation:

Incident Update:

Was there an MOE field response?	No
Were there samples collected / analyzed at any time?	No
Known or Suspected Health / Environmental Consequence at the Time of Incident	
Health / Environmental Consequence:	0 - No Impact

Has a Water Body been impacted?	No
Receiving Environment:	Air

Incident Event:	Leak/Break
Incident Reason:	Operator/Human Error
Source Type:	Pipeline/Components
Sector Type:	Other
Specify Other:	Natural Gas distribution
MOE/Other Agencies Involved:	Provincial Agency - Technical Standards & Safety Authority
Was there a discharge / emission / spill of a contaminant to the environment?	
Yes	

Contaminants Table

Contaminant Name	Description	Code	UN#	Limit	Quantity	[units]	[freq]
NATURAL GAS (METHANE)		35	1075		0	other - see incident description	

Environmental Compliance Reporting (ECR)

Is this an air emission (measured or modelled) or wastewater (sewage) discharge exceedance that will become part of the Environmental Compliance Report? **(legislation, certificate of approval, order, or guideline)**
No

Voluntary / Mandatory Abatement

Was there Non-Compliance/Non-Conformance Identified?	◯ Yes ◯ No

Voluntary / Mandatory Compliance Items

Type	Parent RefNo	Work Summary (may be truncated)	Date	AttainList

Waste / EGR Information

Waste / EGR Information entries:

Document Related Information

Cross Reference:	(doc link)	**Task Link:**	0120-ALQLBX
Originating Document:		**Created by:**	Tyler Philp

Date Created:	2017/04/24	**Date Completed:**	2017/05/09
Office Receiving Incident Report:	Spills Action Centre	**Incident Info Received By:**	Tyler Philp
Bring Forward Date:		**Bring Forward Reason:**	

Signatures

Provincial Officer:

Name:	**Tyler Philp**
Badge No:	
Work Unit:	
District/Area Office:	**Spills Action Centre**
Date:	**2017/04/24**
Signature:	

Supervisor Planning and Response:

Name:	**Bruce Carlin**
Work Unit:	
District/Area Office:	
Date:	**2017/05/09**
Signature:	

Ontario

Ministry of the Environment and Climate Change
Ministère de l'Environnement et de l'Action en matière de changement climatique

COMMENT / MEMORANDUM TO FILE

Memo Details

Date:	2017/04/24
Module	Incident Reporting Main Document Reference Number: 8340-ALQKRS
Client:	
Site(s):	
Subject:	Incident emailed to TSSA
Created by:	Tyler Philp
File Storage Number:	SPILLS ACTION CENTRE

Document Links and Comments:	1244 hrs SACtp to TSSA FSB: Incident emailed to TSSA FSB.
Attachment Names:	

RE: Tank Search for 3525 Baseline Rd, Georgina, ON

Public Information Services <publicinformationservices@tssa.org>
Thu 9/12/2024 12:06 PM
To:Sandeep Kaur <Sandeep.kaur@engtec.ca>

Hello ,

RECORD FOUND IN CURRENT DATABASE:

- We confirm that there are **fuels records** in our database at the subject address(es).

Inventory Number	Address	City	Province	Postal Code	Reason Code	Asset Class / Inventory Context	Asset Type / Inventory Item
10348655	3525 BASELINE RD	GEORGINA	ON	L0E 1R0	Active	FS Facility	FS PRIVATE FUEL OUTLET - SELF SERVE
10386849	3525 BASELINE RD	SUTTON WEST	ON	L0E 1R0	Active	FS Facility	FS PRIVATE FUEL OUTLET - SELF SERVE
11653521	3525 BASELINE RD	GEORGINA	ON	L0E 1R0	Active	FS Liquid Fuel Tank	FS LIQUID FUEL TANK
11653531	3525 BASELINE RD	GEORGINA	ON	L0E 1R0	Active	FS Liquid Fuel Tank	FS LIQUID FUEL TANK
11684867	3525 BASELINE RD	SUTTON WEST	ON	L0E 1R0	Active	FS Liquid Fuel Tank	FS LIQUID FUEL TANK
10353848	3525 BASELINE RD	SUTTON WEST	ON	L0E 1R0	EXPIRED	FS Facility	FS PROPANE REFILL CNTR - CYLR FILL
11658202	3525 BASELINE RD	SUTTON WEST	ON	L0E 1R0	EXPIRED	FS Propane Tank	FS PROPANE TANK

***NO OTHER FUELS RECORDS FOUND IN CURRENT DATABASE FOR THIS REQUEST**

For a further search in our archives, please go to the **TSSA Client Portal** to complete an Application for Release of Public Information. Please refer to How to Submit a Public Information Request (tssa.org) for instructions.

The associated fee must be paid via credit card (Visa or MasterCard).

Once all steps have been successfully completed you will receive your payment receipt via email.

TSSA does not make any representations or warranties with respect to the accuracy or completeness of any records released. The requestor assumes all risk in using or relying on the information provided.

If you have any questions or concerns, please do not hesitate to contact our Public Information Release team at publicinformationservices@tssa.org.

Kind regards,

Melanie Fowler | Public Information Releases Agent
Legal
345 Carlingview Drive
Toronto, Ontario M9W 6N9
Tel: +1 416-734-3593 | Fax: +1 416-231-4903 | E-Mail: mfowler@tssa.org
www.tssa.org

Winner of 2023 5-Star Safety Cultures Award

From: Sandeep Kaur <Sandeep.kaur@engtec.ca>
Sent: Thursday, September 12, 2024 11:19 AM
To: Public Information Services <publicinformationservices@tssa.org>
Subject: Tank Search for 3525 Baseline Rd, Georgina, ON

[CAUTION]: This email originated outside the organisation.
Please do not click links or open attachments unless you recognise the source of this email and know the content is safe.

Please do the Tank search for following properties:-

1. 3525 Baseline Rd, Sutton West, ON L0E 1R0
2. 3449 Baseline Rd RR#3, Sutton, ON L0E 1R0

3. 3504 Baseline Rd, Keswick, ON L4P 3E9
4. 3504 Baseline Rd, Sutton West, ON L0E 1R0
5. 3527 Baseline Rd, Keswick, ON L0E 1R0

Regards,

SANDEEP KAUR

Senior Environmental Specialist

Engtec Consulting Inc.

1-2447 Anson Drive, Mississauga, Ontario, L5S 1G1

t: +1.905.856.2988 | m: +1.416.272.8465

Email: sandeep.kaur@engtec.ca

Engtec Consulting Inc.

| Pavement and Materials | Earth and Environmental

| Materials Testing and Evaluation | Forensic Engineering

| Contract Administration | Infrastructure

www.engtec.ca

This e-mail transmission is confidential and may contain proprietary information for the exclusive use of the intended recipient. Any use, distribution or copying of this transmission, other than by the intended recipient, is strictly prohibited. If you are not the intended recipient, please notify the sender and delete all copies. Electronic media is susceptible to unauthorized modification, deterioration, and incompatibility. Accordingly, the electronic media version of any work product may not be relied upon.

This electronic message and any attached documents are intended only for the named recipients. This communication from the Technical Standards and Safety Authority may contain information that is privileged, confidential or otherwise protected from disclosure and it must not be disclosed, copied, forwarded or distributed without authorization. If you have received this message in error, please notify the sender immediately and delete the original message.