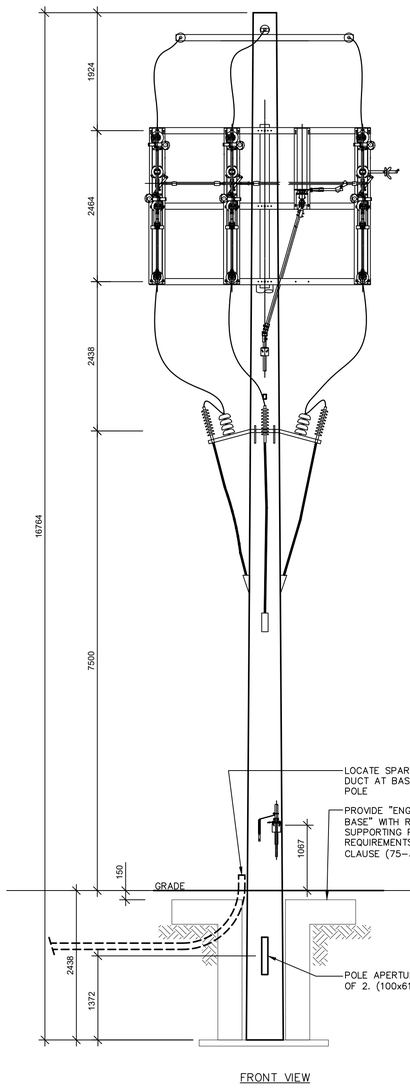

FRONT VIEW

#3/0 ACSR OVERHEAD CONDUCTORS TO UTILITIES TANGENT POLE TO TANGENT POLE BY UTILITY.

89-T1

"DOUBLE" LOAD BREAK SWITCH AND FUSES, MOUNTED ON A COMMON GALV. STEEL FRAME

COORDINATE SWITCH DURECTION WITH LUC

SWITCH POLE NOTES:

- SWITCH WILL BE CUSTOMER OWNED WITH A JOINT "LOCK" WITH THE UTILITY
- HEIGHT OF CONCRETE SELF SUPPORTING POLE TO BE 55' (16764mm) CLASS L.
- EDGE OF PRIMARY SWITCH TO BE MINIMUM 3000mm HORIZONTAL FROM ANY BUILDING OR STRUCTURE AND 7m VERTICAL.
- LOAD BREAK SWITCH TO INCLUDE ALL NECESSARY PIPING AND HANDLE MECHANISM FOR CONCRETE POLE. CONTRACTOR TO PROVIDE ADDITIONAL MOUNTING HARDWARE AS REQUIRED.
- CONTRACTOR TO PROVIDE OVERHEAD CONDUCTORS FOR INTERCONNECTION TO UTILITIES LINES. TERMINATIONS WILL BE PROVIDED BY CONTRACTOR EXCEPT AT UTILITIES' POLE. CONTRACTOR TO COORDINATE WORK AND SCHEDULE WITH UTILITY.
- REFER TO OESC FOR CLEARANCES:
  - TABLE 31, MIN. HORIZONTAL SEPARATION OF LINE CONDUCTORS ON SAME STRUCTURE = 700mm AT 46kV MAX.
  - TABLE 33, HORIZONTAL CLEARANCE FROM ADJACENT STRUCTURES = 3m AT 46kV MAX.
  - TABLE 34, VERTICAL GROUND CLEARANCES FOR OPEN LINE CONDUCTORS = 7m AT 46kV MAX.
- CONTRACTOR TO SUBMIT AN ENGINEER CONCRETE BASE DESIGN FOR SELF SUPPORTING CONCRETE POLE, AS PER OESC CLAUSE 75-300 4).

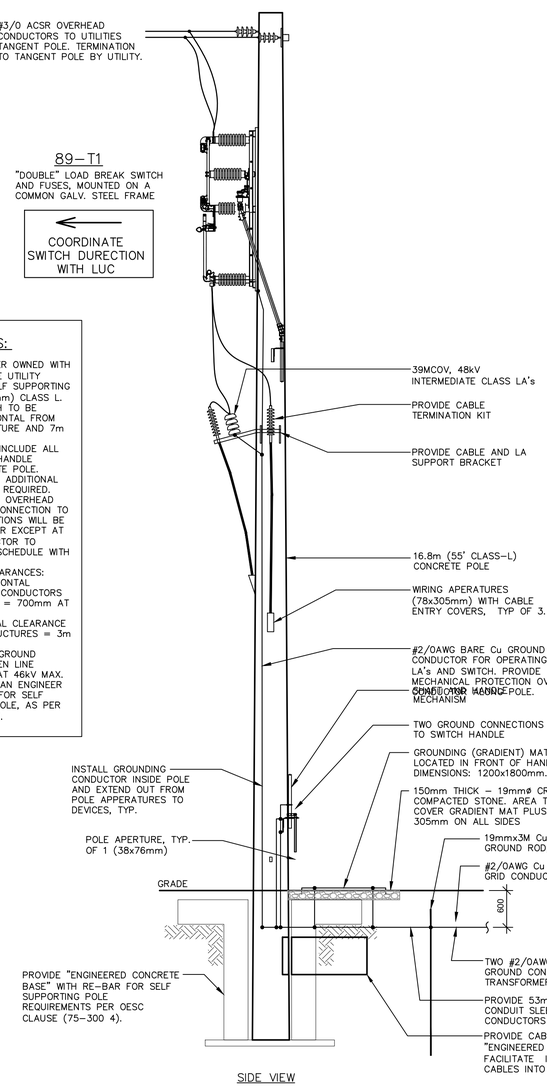

SIDE VIEW

1 E-2 PROPOSED 44kV TERMINATION POLE – FRONT AND SIDE VIEWS

- NTS, DIMENSIONS SHOWN IN mm
- REFER TO NT POWER STANDARD No. NTP 16-01

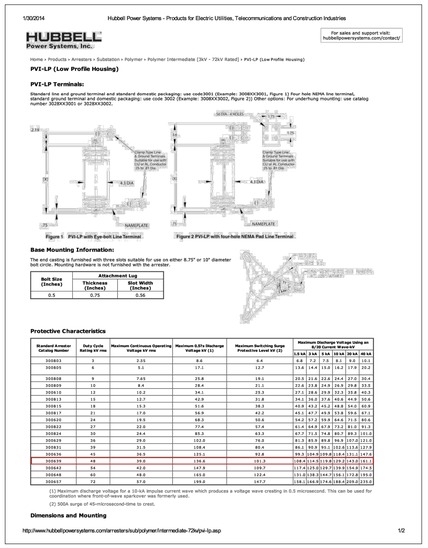

1/30/2014 Hubbell Power Systems - Products for Electric Utilities, Telecommunications and Construction Industries

HUBBELL Power Systems, Inc.

For sales and support visit: hubbellpowersystems.com/contact/

Home > Products > Arresters > Substation > Polymer > Polymer Intermediate (3kV - 72kV Rated) > PVI-LP (Low Profile Housing)

PVI-LP (Low Profile Housing)

PVI-LP Terminals:

Standard line and ground terminal and standard domestic packaging: use code3001 (Example: 3008KX3001, Figure 1) Four hole NEMA line terminal, standard ground terminal and domestic packaging: use code 3002 (Example: 3008KX3002, Figure 2) Other options: For underhung mounting: use catalog number 3020KX3001 or 3020KX3002.

Figure 1: PVI-LP with Eye-bolt Line Terminal

Figure 2 PVI-LP with four-hole NEMA Pad Line Terminal

Base Mounting Information:

The end casting is furnished with three slots suitable for use on either 8.75" or 10" diameter bolt circle. Mounting hardware is not furnished with the arrester.

Bolt Size (Inches)	Attachment Lug	
	Thickness (Inches)	Slot Width (Inches)
0.5	0.75	0.56

Protective Characteristics

Standard Arrester Catalog Number	Duty Cycle Rating kV rms	Maximum Continuous Operating Voltage kV rms	Maximum 8/20 µs Discharge Voltage kV (1)	Maximum Switching Surge Protective Level kV (2)	Maximum Discharge Voltage Using an 10 kA Impulse Current				
					1.2/50 µs	8x8 µs	2 µs	1 µs	0.5 µs
300603	3	2.55	8.6	6.6	8.6	7.9	7.8	8.1	9.0
300605	6	5.1	17.1	12.7	13.8	14.9	15.6	16.2	17.8
300608	9	7.65	25.8	19.1	20.5	21.8	22.6	24.4	27.0
300609	10	8.4	28.4	21.1	22.6	23.8	24.9	26.8	29.8
300610	12	10.2	34.1	25.3	27.1	28.6	29.9	32.1	35.8
300612	15	12.7	42.9	31.8	34.1	36.0	37.6	40.4	44.9
300615	18	15.3	51.6	38.3	40.9	43.2	45.2	48.6	54.0
300617	21	17.0	56.9	42.2	45.1	47.7	49.9	53.8	59.6
300620	24	19.5	68.2	50.6	54.0	57.1	59.9	64.4	71.5
300622	27	22.0	77.4	57.4	61.4	64.8	67.8	72.9	81.0
300624	30	24.4	85.3	63.3	67.7	71.5	74.8	80.7	89.5
300629	36	29.0	102.0	76.0	81.3	85.9	89.9	96.9	107.6
300631	39	31.5	108.4	80.4	86.1	90.9	95.1	102.6	113.8
300636	45	36.5	125.1	92.8	99.3	104.9	109.8	118.4	131.3
300638	48	39.0	136.8	101.3	108.4	114.5	119.8	129.2	143.1
300642	54	43.8	147.9	109.7	117.4	124.0	129.7	139.9	154.9
300648	60	48.6	165.6	123.4	131.8	139.3	145.8	157.3	174.2
300657	72	57.0	196.8	147.2	158.1	167.0	174.8	188.4	208.6

(1) Maximum discharge voltage for a 10-kA impulse current wave which produces a voltage wave cresting in 8.0 microsecond. This can be used for coordination where front-of-wave sparkover was formerly used.

(2) 300A surge of 45-microsecond-time to crest.

Dimensions and Mounting

http://www.hubbellpowersystems.com/arresters/subjpolymer/intermediate-72kv/pvi-lp.asp 1/2

Aluma-Form Heavy Duty Arrester Mount
Model 31 AP

- A heavy duty, 3-phase equipment mount designed to support intermediate arrestors, fase cutouts andor any type of termination (as shown).
- This unit mounts any intermediate-station class arrestor up to 72 KV with 8-3/4" bolt circle mounting.
- The 31AP is designed with an angular tilt to maintain more than sufficient clearance for phase to phase and phase to ground spacing.
- By removing the bands, three single position thru-bolt brackets are available for either single phase or in-line construction.

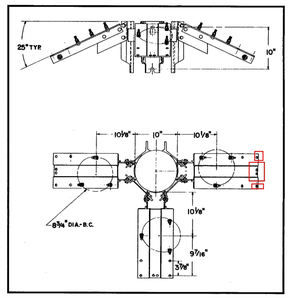

3 E-2 PROPOSED 44kV LA's AND BRACKET FOR POLE

- NTS

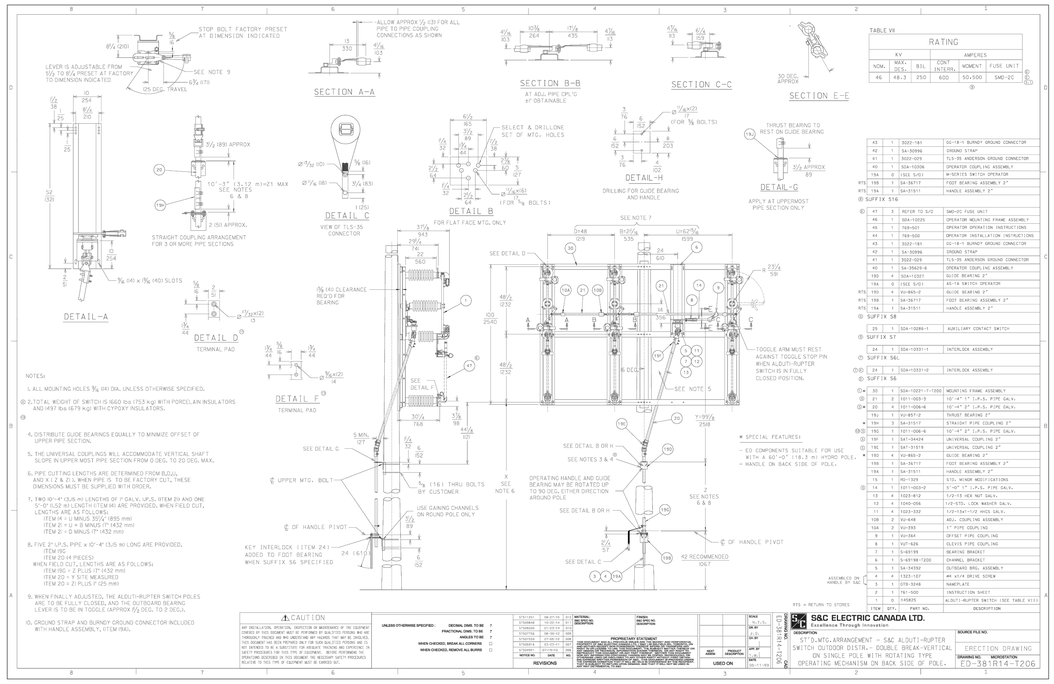

2 E-2 PROPOSED 44kV PRIMARY SWITCH – S&C SPECIFICATION DRAWING

- NTS

DISCLAIMER AND COPYRIGHT	BENCHMARKS		No.	REVISION DESCRIPTION	DATE	ENGINEER STAMP
CONTRACTOR MUST VERIFY ALL DIMENSIONS AND BE RESPONSIBLE FOR SAME. ANY DISCREPANCIES MUST BE REPORTED TO THE ENGINEER BEFORE COMMENCING WORK. DRAWINGS ARE NOT TO BE SCALED. TATHAM ENGINEERING LIMITED CLAIMS COPYRIGHT TO THIS DRAWING WHICH MAY NOT BE USED FOR ANY PURPOSE OTHER THAN THAT PROVIDED IN THE CONTRACT BETWEEN THE OWNER/CLIENT AND THE ENGINEER WITHOUT THE EXPRESS CONSENT OF TATHAM ENGINEERING LIMITED.			1.	ISSUED FOR CLIENT REVIEW AND COORDINATION	SEPT. 2024	NOT FOR CONSTRUCTION
			2.	ISSUED FOR TENDER	OCT. 2024	

603 COUNTY ROAD 49
PICTON, ONT.

44kV SWITCH POLE DETAIL

TATHAM ENGINEERING

DESIGN: RJW	FILE: 124154	DWG:
DRAWN: RJW	DATE: SEPT. 2024	E-2
CHECK: GGR	SCALE: AS SHOWN	

Drawing Name: 124154 – E-1 – E-3.dwg, Plotted: Oct 03, 2024