1. GENERAL

1. GENERAL REQUIREMENTS

Comply with requirements of Division 1.

2. WORK INCLUDED

1. Supply all faucets, pre-rinse fixtures, pot fillers, pressure reducing valves, regulators, check valves, anti-syphon devices and backflow preventors as required to conform to applicable codes.

2. Supply equipment complete with all electrical equipment, motors, control devices, motor starting switches complete with thermal overload protective devices, disconnect switches, heating elements, receptacles complete with stainless steel cover plates, junction boxes, pilot light, light fixtures, light bulbs, wiring materials, supply cords complete with attachment on portable equipment as shown on drawings and hereinafter specified and as may be required to form fully operative and approved equipment.

3. All interwiring from pre-assembled compressor and cooling coil in walk-in cooler to constitute a complete operating system.

3. RELATED WORK SPECIFIED ELSEWHERE

1. Division 26 00 00: Power supply and circuit breakers for all Foodservice Equipment through to the wiring connection box located on the equipment. Remotely located motor starting switches, disconnect switches required for equipment furnished and mounted all in accordance with local code inspection requirements and respective manufacturer's instructions.

2. Division 26 00 00: All Power receptacles to suitable configuration on walls as required for mobile equipment. All electrical cords from ceiling to work tables as shown on the plan, all in accordance with local code inspection requirements and respective manufacturer's instructions. All labour that may be required by any union agreement to handle this equipment.

3. Division 26 00 00. Any and all line voltage control wiring and interlocking with fire alarm.

4. Note: This a fire alarm building and kitchen ventilation system must be interlocked with fire alarm.

5. Division 23 00 00. All control wiring between kitchen exhaust hoods, remote control stations, and exhaust hood fans, all in accordance with local code inspection requirements and respective manufacturer's instructions.

6. Division 23 00 00: All control wiring between dishwasher exhaust, remote control stations, and exhaust fan, all in accordance with local code inspection requirements and respective manufacturer's instructions.

7. Division 22 00 00: Mechanical service connections to equipment complete with shut-off valves for each item, traps, floor drains, elbows, etc.

8. Division 22 00 00: Condensate drain lines from equipment c/w traps and cleanouts piped to discharge over open drains.

9. Division 22 00 00: Mechanical services including natural gas, connections to equipment complete with shut-off valves for each item, traps, floor drains, elbows, etc.

10. Section 03 30 00: Concrete curbs, pads and bases, condenser wood sleepers, depressed floor areas, expansion joints and floor insulation.

11. Section 09 66 50: Resilient sheet or ceramic flooring in specified food service areas as specified by the architect.

12. Division 22/23/26 00 00: Disconnect existing equipment to be reused, reworked or relocated from their existing services and re-connect after rework or relocation.

13. Provision of all core hole drilling through building structural slab, walls or roof to accommodate refrigeration lines, electrical conduit, plumbing lines, steam supply and condensate return lines, gas lines, detergent lines and exhaust/make-up air ducting etc.

15. Supply and setting of sleeves in floors, walls and ceiling (as well as any related core drilling) for electrical, mechanical refrigeration, plumbing, gas and beverage lines etc.

16. All labour that may be required by any union agreement to handle Foodservice equipment.

17. Section 06 41 16: Architectural Casework

18. Section 06 41 19: Plastic Laminate Work

19. Section 13 48 00: Seismic Restraint

4. <u>ABBREVIATIONS</u>

American Society of Heating, Refrigerating and Air-Conditioning Engineers	ASHRAE
above finished floor	AFF
ampere	A or amp.
approximate	approx.
British Thermal Unit	BTU
BTU per Hour	BTUH
Canadian Gas Association	CGA
Canadian Standards Association	CSA
complete with	c/w
degrees Celsius	°C
diameter	dia.

drawing	dwg.
gauge	ga.
Horsepower	H.P.
hour	hr.
junction box	J.B.
kilopascal	kPa
light emitting diode	L.E.D.
litres per second	l/s
maximum	max.
mechanical	mech.
millimeter	mm.
minimum	min.
National Electrical Manufacturers Association	NEMA
National Fire Protection Association	NFPA
National Hardwood Lumber Association	NHLA
National Sanitation Foundation	NSF
not in contract	N.I.C.
number	No. or #
Phase	Ph.
plastic laminate	p. lam.
poly vinyl chloride	PVC
stainless steel	s.s.
square	sq.
typical	typ.
Underwriter's Laboratories	UL
Underwriter's Laboratories Canada	ULC
volts	V

5. WORK SUPPLIED UNDER THIS SECTION BUT INSTALLED UNDER WORK BY OTHERS

1. Floor pans and floor troughs.

2. Electrical disconnect boxes and electrical breaker panels (remote), if applicable.

3. Exhaust hood control panels, heat recovery units and rinse line injectors.

4. Electrical and mechanical fire pull station (remote) if applicable.

5. Gas valve for fire protection system.

6. Evaporator drain line heat tracing cable.

7. Ceiling Hung heat lamps and decorative lamps.

6. CO-OPERATION WITH OTHER TRADES

1. Co-operate with the General Contractor and other Contractors to permit proper execution of the work.

2. Give timely instructions and information in writing to the General Contractor of the requirements necessary for surfaces, materials or inserts prepared

and/or supplied by other Trades which will affect the work of this Section.

3. Provide all roughing-in dimensions and information regarding Mechanical and Electrical connections, including floor drains, utility or special purpose receptacles and details of all depressed floor areas, curbs and bulkheads.

7. QUALITY ASSURANCE

1. The work of this section shall be executed by one of the following Food Service Equipment Contractors:

   Advantage Restaurant Supply & Service, Niagara Falls, Ont.
   United Trimen Food Service Equipment, Toronto, Ont.
   European Hotel & Restaurant Imports Ltd., Toronto, Ont.
   Doyon Despres, Toronto, Ont.
   Nella Cutlery & Food Equipment Inc., Mississauga, Ont.
   Nella Cutlery & Food Equipment Inc., Toronto, Ont.
   Russell Hendrix Food Service Equipment, Kingston, Ont.
   Williams Food Equipment, Windsor, Ont.

8. SUBMITTALS

1. Submit shop drawings to clearly show assembly, method and location of exposed fastenings and installation details. Submit (1) one set of white prints in roll form or 11" x 17" min. size sheet for review and (1) one digital set. Digital set will be returned to the Architect and the General Contractor. Do not proceed with fabrication until respective shop drawings are reviewed. In preparing shop drawings the fabricator shall verify that all component parts and assembly of each item will support the superimposed loads without deflection detrimental to function, appearance, safety or in excess of applicable bylaws.

2. Items of equipment to be manufactured by this Section, or to be manufactured by others, shall be completely illustrated by shop drawings, or catalogue cuts and detailed description.

3. Review of the drawings shall be general and shall not be intended to serve as a check, and shall not relieve this Trade from responsibility or from furnishing the materials as required in the drawings and specification.

4. Submit roughing in drawings within 30 days of receiving the award or letter of intent.

5. Floor plans and roughing-in drawings shall not be less than 1:25 scale. Equipment drawings shall be 1:10 scale plan with sections at 1:10 in sufficient number to clearly illustrate construction. Details of fitments shall be half of full size. All welds, supports and fasteners shall be clearly indicated. Overall drawing size shall match Architectural drawings.

9. REQUIREMENTS OF REGULATORY AGENCIES

1. Electrical equipment shall comply with the requirements of the Canadian

Standards Association and/or local code inspection requirements and each item of such equipment shall be accompanied by certificate or label of approval.

2. Equipment design shall comply with provincial and local municipal health department requirements and current Ontario Building Codes.

10. WARRANTY

1. Warrant the equipment against defects of materials or workmanship which may develop within a period of one year from the date of completion of the project. Replace defective equipment which cannot be made good.

11. INSPECTION

2. Inspection of the Food Service Equipment will be carried out by the Architect or his representative.

12. IDENTIFICATION

1. Provide pressure sensitive plastic labels to identify all controls. Lettering to be white on black.

2. Demonstrate the function of equipment to the Owner, at a time specified prior to opening of these facilities. Demonstration shall be carried out by a competent representative who shall also be present on the day designated for facilities start up.

3. Explain and demonstrate maintenance procedures for the equipment. Provide three (3) three complete sets of operating instructions and maintenance manuals and shop drawings of fabricated equipment, hard cover bound, itemized and in sequence according to plan, prior to opening demonstration.

13. SERVICES

1. Electrical supply available shall be as indicated on equipment schedule. Motors shall be 1200 or 1725 R.P.M. Outlets, conductors, shall be as specified under electrical section. Conductors shall be identified.

2. Fit portable electrical equipment with supply cords and attachment caps in accordance with the electrical characteristics and outlets specified for the equipment complete with necessary grounding conductor within the outer jacket of the supply cord.

3. Water will be supplied at local pressure. Provide pressure reducing valves where required for proper operation of the equipment.

14. PRICE BREAKDOWN

1. Submit itemized individual prices for each item of equipment herein specified together with all taxes applicable for each item.

2. Prices shall be tendered for the exact brand of manufactured items specified.

15. MATERIAL VARIATIONS

1. Throughout the specifications, types of materials and equipment are specified by manufacturer's name and model number in order to establish minimum standards of quality and performance. Unless specifically stated otherwise the phrase "or approved equal" may be assumed to apply. It is the responsibility of the bidder to prove such equality.

2. Proposed substitutions to equipment specified shall be listed under material variations on the tender form. Such listing shall indicate material, make and model and complete specifications where appropriate and shall state what difference, if any, will be made in the amount of the tender for each substitution should it be accepted. Later requests will not be considered.

16. DIMENSIONS

1. Unless specifically designated otherwise, all dimensions specified herein are expressed in millimetres.

2. PRODUCTS

1. MATERIALS

1. Materials shall be new, first grade. Thickness herein specified shall be standard gauge for sheet and plates.

2. Wall thickness for tubular material shall be nominal and established after polishing.

3. Stainless steel shall be 18-8, type 302 or 304, number 4 finishes on exposed sides, unless otherwise specified. Hand ground finishes will not be acceptable.

4. Galvanized steel wherever specified shall be copperbearing sheet, 350 grams per square metre hot galvanized and finished with one coat of primer (conforming to C.G.S.B specification 85-GP-16M) and one coat of silver grey hammerloid.

5. Feet shall be bullet shaped stainless steel with minimum internal adjustment of 40 mm.

6. Hardware shall be nickel chrome plated, .127 mm thickness minimum, bright finish, unless otherwise specified.

7. Fastenings, screws, bolts, nuts etc., shall be stainless steel, type 302 or 304.

8. Casters shall be stem or plate mounted as required, diameter of wheel as specified. Units with swivel casters shall have locking devices on two swivel casters (unless foot lock is specified). All casters to have non marking

cushion rubber wheels with thread guards.

9. Faucets and valves shall be supplied including pre-rinse fixtures, pot fillers, pressure reducing valves, check valves and anti-syphon valves as required for the proper operation of equipment.

10. Insulation shall be glass fibre batts, 50 mm minimum thickness with minimum density of 17.6 kg. per cubic metre.

2. WELDING

1. Method -electric seamless using low carbon filler rod containing sufficient chromium and nickel to give approximately the same composition in welds as adjoining parts. Heli-arc welding method shall be used wherever practical. Welds shall be complete welds, strong and ductile.

2. Workmanship -free from pits, cracks, discolouration and other mechanical imperfections.

3. Joints - invisible butt welded, properly jigged and ground smooth.

4. Finish - ground smooth and polished to match adjacent surfaces. NOTE: Spot welding, rivetting or filling with solder not acceptable.

3. DESIGN AND CONSTRUCTION

1. Surfaces of countertops, dish tables, drainboards, etc. shall be one-piece construction. All joints, including field joints, shall be welded and polished.

2. Items shall be adequately reinforced and braced to support the expected superimposed loads and be absolutely rigid with no buckling or deflection.

3. Body front on cabinets shall be welded and polished to simulate one-piece construction.

4. Finished work shall be true and plumb with no open seams or rough edges.

5. Openings for connections of plumbing and other services shall be die-stamped.

6. Plumbing and electrical service connections shall be made horizontal from the wall or bulkhead etc. at the highest point possible for a direct in line connection.

7. Obtain necessary information of china, trays, baskets, or pans and any other necessary information to determine exact dimensions of openings for trucks, dispensers, angle slides, compartment dish racks, etc.

8. Millwork cabinets shall be constructed of plastic laminate on 19 mm thick waterproof plywood dowelled, glued and screwed. (MDF board is not accepted) Interior of cabinets shall be finished with white plastic laminate throughout. Exterior finish shall be plastic laminate as selected.

9. Equipment other than custom fabricated s.s. items shall be free of visible Dealer & Contractor's promotional logos, stickers, decals, or any branding embossed or stamped into equipment, other than the factory installed manufacturer's logo.

4. WORK TABLE CONSTRUCTION

1. Top: 1.6 mm s.s. on galvanized sub top.

   Height: 890 mm from floor unless otherwise specified.
   Edges:
   Boxed: Turned down 40 mm and in 15 mm at 45 degrees.
   Dished and Boxed: Up 15 mm at 45 deg., out 25 mm and down 40 mm and in 15 mm at 45 degrees.
   Down Flat: Turned down 40 mm.
   Splash: Up and Folded: Turned up height as shown and folded down 15 mm.
   Rolled up and Boxed: Rolled up on radius of 10 mm on horizontal plane to height specified, turned out 25 mm and down 15 mm.

2. Base: Legs and crossrails of 1.6 mm 42 mm (outside diameter) s.s. tubing, mitred and welded. Inserted through saddle and welded.

3. Saddles: 2.0 mm s.s. 100 x 25 mm top hat type fully enclosed stud welded to underside of table top. Tables up to 2000 mm in length shall 4 legs and longer tables 6, unless otherwise specified or shown on drawings.

4. Undershelves: 1.6 mm s.s. as specified for individual items, removable in sections formed over crossrails at front and sides down 25 mm and in 15 mm at joint. Where side splash is specified the sides shall be turned up 75 mm and folded 15 mm. Shelves shall be 250 mm from the floor unless otherwise specified.

5. Overshelves: 1.6 mm s.s. turned down 25 mm and under 15 mm at 45 degrees front and sides.

6. Backsplash: Top shelf turned up 40 mm and out 30 mm over top of tube support and down 15 mm ends closed. Intermediate shelves turned up 40 mm and folded down 15 mm. Shelves supported on 25 x 25 mm x 1.6 mm s.s. square tube uprights with horizontal cantilever supports of 25 x 25 mm x 1.6 mm s.s. square tubing fully welded and polished. Uprights inserted through table splash fully welded around uprights at splash and fastened to saddle.

5. UTILITY DRAWERS

1. Type: Kason Industries, 304 stainless steel heavy duty welded drawer assembly model 7102C00020.

2. Insert: 508 x 508 x 127 mm Heavy Duty Thermoplastic Drawer Pan.

3. Front: 1.6 mm s.s. insulated double pan c/w integral formed handle.

4. Frame: 1.6 mm s.s. internal frame assembly.

5. Housing: 1.2 mm s.s. outer drawer housing complete full extension drawer slides, and self-closing drawer feature.

6. Locks: Cylinder type assembly complete with (2) keys. All drawer locks keyed alike.

6. SINK CONSTRUCTION

1. Material: 2.0 mm s.s. drainboard and splash fully welded one piece.

2. Compartments: Vertical and bottom corners radiused 40 mm with bottom scored and sloped to drain.

3. Corner Drains: 38 mm dia. s.s. corner waste c/w 250 mm high brass chrome plated overflow tube with plastic seat. Assembly installed in sink corner c/w 1.2 mm s.s. perforated guard removable on s.s. clips. Drain attached by means of lock nut and washer to die stamped recess. Drain outlet c/w brass tailpiece.

4. Lever drains: 38 mm dia. s.s. centre lever waste as manufactured by Klein or Kenco with s.s. crumb cup drain basket or s.s. perforated plate. Drain outlet c/w brass tail piece.

5. Legs and Crossrails: 40 mm (outside diameter) 1.6 mm s.s. tubing mitred and fully welded, feet as specified. Legs to be attached to sink by means of s.s. leg gussets.

6. Edges: Front and ends rolled up on 9 mm radius 65 mm to 75 mm, out 40 mm, down 40 mm and under 15 mm at 45 degrees.

7. Splash: Where shown rolled up on 10 mm radius to height of 250 mm and back 50 mm at 45 degrees and down 15 mm.

8. Drainboards: 826 mm from floor rolled up 63 mm at outside edge with 15 mm slope to sink. Front edge to be straight horizontal line.

9. Faucets: Wall or deck mount commercial quality Kason, T&S, Encore or Fisher as specified for individual items. All faucets shall be brass with nickel chrome plate on exposed parts and shall be complete with integral stops on wall mounted faucets s.s. valve stems, replaceable seats, tubular swing spouts and aerators and hooded lever handles.

7. COUNTER CONSTRUCTION

1. Top: 1.6 mm s.s. on galvanized sub top all welded formed down 40 mm and in 20 mm. Food well openings turned down 25 mm with corners welded and polished or 20 mm thick Quartz (as selected by Architect) or 12 mm solid surface material on 19 mm plywood subtop.

2. Body: 1.0 mm s.s. turned in 40 mm, back 40 mm and returned 40 mm at openings, unless double wall is specified in which case omit 40 mm return. Where units occur on a curb base, toe space shall be 100 mm with overhang completely enclosed and sealed with clear colourless silicone sealant to 19-GP-18 M87.

3. Intermediate Shelf: 1.6 mm s.s. mounted on s.s. pilasters for adjustment on 25 mm centres. Pilasters to extend to within 50 mm of top and bottom. Shelf edge to turn down 25 mm and in 15 mm at front and sides with corners welded. Shelf rear turned up 75 mm and folded with 25 mm gap at rear of shelf and cabinet. At single gable pilasters shall be mounted on 40 mm s.s. fully enclosed channels for easy removal of shelf. Where removable undershelf is specified it shall be mounted on 100 mm long s.s. pilaster strip complete with s.s. clips for removal.

4. Bottom: 1.6 mm s.s. with rear and (2) sides turned up 40 mm with corner welded, front turned down 40 mm and boxed.

5. Saddle: 2.0 mm galvanized 25 x 100 mm top hat type, fully enclosed.

6. Legs and Feet: 40 mm (outside diameter) s.s. tubing and adjustable feet as specified.

7. Overshelves: 1.6 mm s.s. turned down 25 mm and in 15 mm on all edges. Uprights 25 mm sq. s.s. tubing inserted through top and fully welded around upright at counter top.

8. Locks: Doors and drawers complete with chrome plated cylinder locks, keyed alike.

9. Sink Compartments: As specified for sink construction with s.s. crumb cup waste assembly.

8. <u>BREAD DRAWER</u>

1. Material: 1.0 mm s.s. liner with radiused corners 457 x 508 x 381 mm.

2. Front: 2.5 mm s.s. as per utility drawer c/w s.s. formed integral handle.

9. <u>HINGED DOOR</u>

1. Doors: 1.0 mm s.s. double pan construction with 15 mm honeycomb interior deadening. Liner 1.0 mm s.s. #4 finish.

2. Handle: Integral formed as detailed.

3. Hinge: Continuous s.s. piano hinge 30 mm minimum.

4. Catch: Roller bearing friction catch.

5. Lock: Cylinder type as specified for drawers, keyed alike, chrome plated.

3. EXECUTION

1. INSTALLATION

    1. Supply, deliver and set in place all equipment in accordance with these specifications ready for service connections by mechanical and electrical trades.

2. DELIVERY

    1. Unless specifically noted otherwise, items specified under this section shall be supplied to be built in as work progresses.

    2. Protect with heavy suitable wrapping all work before delivery. Wrappings shall remain until final clean up.

3. JOB MEASUREMENTS

    1. Visit the job and take measurements necessary to ensure accurate and proper fitting of this work into the building and around all obstructions or projections already in place and/or shown on the drawings and to suit the locations of service piping all as required to produce a neat, workmanlike installation.

    2. Make up the equipment in sections which can easily be handled into and through the building to the final location without alteration or damage to the building or fitments already in place.

4. SUPERVISION

    1. Provide a competent supervisor for the installation of the equipment capable of supplying such information as may be required by other trades for the proper connection and completion of this contract.

5. DEBRIS

    1. Promptly remove from the site all debris and excess materials resulting from the work of this contract.

6. CLEANING

    1. Clean and wipe down equipment to a dust free state.

7. ITEMIZED EQUIPMENT

GROUND FLOOR KITCHEN

Item 1 Refrigerator

Quantity:	1
Size:	1375 x 750 x 1991 mm high.
Type:	Atosa Canada reach in solid door refrigerator model MBF8507GR c/w door locks and exterior temperature display.
Finish:	Standard, stainless steel
Alt. Manufactures:	True, Turbo Air

Item 2 Freezer

Quantity:	1
Size:	1375 x 750 x 1991 mm high.
Type:	Atosa Canada reach in solid door freezer model MBF8503GR c/w door locks and exterior temperature display.
Finish:	Standard, stainless steel
Alt. Manufactures:	True, Turbo Air

Item 3 Refrigerator (Chef Base)

Quantity:	1
Size:	1841 x 839 x 665 mm high.
Type:	Atosa Canada Chef Base model MGF8453GR c/w (4) four self-closing drawers and exterior temperature display.
Finish:	Standard, stainless steel
Extras:	(4) four 305 x 510 x 100 mm s.s. full size pans.
Alt. Manufactures:	True, Turbo Air

Item 4 Storage Shelving

Quantity:	2
Type:	Metropolitan adjustable wire Super Erecta shelving.
Sections:	(2) - 1219 x 457 x 2210 mm high. Each section c/w (5) five only shelves and uprights.
Alt. Manufacturer:	Quantum Storage Systems

Item 5 Work Table

Quantity:	1
Size:	2200 x 750 x 890 mm high
Construction:	S.s. all welded as shown and as specified for work tables.
Top:	1.6 mm s.s. with front turned down and under. Splash at rear and sides rolled up 150 mm, boxed and sealed to rear wall.
Sink Compartment:	400 x 450 x 250 mm deep 1.6 mm s.s. sink compartment sloped to drain, c/w deck mount faucet and centre crumb

		cup waste.
	Drawer:	(1) one only as specified for utility drawer.
	Undershelf:	1.6 mm s.s. formed over crossrails removable in sections.
	Overshelf:	1.6 mm s.s., 2200 mm long mounted on 25 mm s.s. sq. tube uprights welded to shelf and anchored to reinforced rear wall.
	Saddles, legs bracing & feet:	As shown and as specified, open for garbage can at left-hand end.

Item 6 Coffee Brewing Counter

Quantity:	1
Size:	2250 x 750 x 890 mm high.
Construction:	S.s. all welded as shown and as specified for counter construction. Base cabinet arranged for garbage can at right-hand side as detailed.
Top:	1.6 mm s.s. with front and ends turned down and under, at rear rolled up 100 mm and boxed.
Sink Compartment:	400 x 450 x 250 mm deep 1.6 mm s.s. sink compartment sloped to drain, c/w deck mount faucet and centre crumb cup waste.
Drawers:	(2) two deep drawers as specified for drawers c/w heavy duty extension slides and drawer tote inserts.
Intermediate Shelf:	1.6 mm s.s. adjustable on pilaster strips.
Hinged Doors:	1.0 mm s.s. double pan. Doors c/w pivot hinges, friction catches and integral s.s. pull.
Saddles:	2.0 mm galvanized
Feet:	42 mm dia. x 150 mm long s.s. legs c/w adaptor toes and fixing plate secured to underside of s.s. counter.
Kick Plate:	1.2 mm s.s. removable finishing kick plate at front and sides scribed to floor.

Item 7 Coffee Brewer

Quantity:	2
Type:	Bunn model AXIOM-DV-APS ST/PF w/ Gourmet Funnel Automatic Thermal Server Coffee Brewer, 3.5 kw, 208/1/60.
Equipment:	Standard, including hot water faucet.
Installation:	Connected through water filter item 7A.
Extra:	(4) two Bunn Airpot model 2.5l SST LA #32125.0000.

Item 7A Water Filter

Quantity:	1
Type:	Everpure Insurice QC71 Single – 4FC-S or as per manufacturer's recommendation, installed on rear wall as shown on detail 7-K3 in water supply line.

Item 8 Griddle (counter)

Quantity:	1
Size:	381 x 610 x 349 mm high.
Type:	Garland Designer Series Electric Griddle model ED-15G.
Installation:	Install on Refrigerated Chef Base item 3.

Item 9 Fryer (counter)

Quantity:	2
Size:	381 x 610 x 330 mm high.
Type:	Garland Designer Series Electric Fryer model ED-15SF.
Installation:	Install on Refrigerated Chef Base item 3.

Item 10 Number not used.

Item 11 Induction Countertop Hob

Quantity:	1
Size:	380 x 720 x 140 mm high.
Type:	Garland Induction Instinct Series Electric Countertop Dual Hob model INSTINCT Hob 7 c/w Nema 15-20P plug.
Installation:	Install on Refrigerated Chef Base item 3.

Item 12 Combi Oven & Stand

Quantity:	1
Size:	876 x 800 x 788 mm high less stand.
Type:	Electric boiler-free counter combi oven/steamer. Unit to operate as dry heat oven, pressure-less steamer and a combination thereof c/w wash down hose and temperature probe.
Capacity:	Oven cavity size to accommodate minimum of (7) – 300 x 500 x 65 mm steam pans.
Finish:	S.s. interior and exterior.
Extra:	- S.s. stand c/w tray slides. - Automatic compartment washing system. - Cook & Hold Feature. - Retherm Feature. - Manual program override feature. - Easy Touch Digital Controls. - Two speed fan.
Stand:	Combi oven mobile stand c/w s.s. rack slides.
Installation:	Install unit on specified stand.
Manufacturers:	Alto Shaam CTP6-10E, Convotherm maxx pro 6.10 ES-N

Item 12A Water Filter

Quantity:	1
Type:	Supply water filter as per manufacturer's recommendations. Water filter installed as shown on drawing K1 mounted on back wall in water supply line.

Item 12B Condensate Hood

Quantity:	1
Type:	Halton Ventless Condensate hood model ConoVent 4 for 6.10 and 10.10 ES/EB models.
Finish:	Stainless Steel.
Installation:	Mount unit on item 12 as per manufacturer's instructions, leave ready for electrical and mechanical connections by other trades.

Item 13 Exhaust Hood

Quantity:	1
Size:	1945 x 1270 x 2565 mm high.
Type:	Wells Ventless Exhaust Hood model WVU-72 c/w stand.
Fire Suppression:	Ansul R-102A pre-installed fire suppression system c/w suppression bottle, piping, plenum and (1) one nozzle for electric range protection and all equipment required to constitute a fully approved system installed in accordance with N.F.P.A 96, 17A, ULC/ORD1254.6-95 and authorities having jurisdiction.
Bottle:	S.s. agent tank and enclosure mounted on wall adjacent c/w fusible link detection device and all necessary controls with sufficient capacity installed in accordance with Canadian Underwriter's regulations and approvals by this contractor.
Filters:	4-stage filtration: grease filter, (2) pre-filter, (2) HEPA filter and charcoal filter. - (2) Baffle Filters.

Item 13A Fire Suppression System — Preinstalled in item 13.

Item 14 Garbage Can & Dolly

Quantity:	3
Type:	Rubbermaid model 2620 garbage can and 2640 conversion dolly.

Item 15 Worktop Refrigerator

Quantity:	1
Size:	1724 x 760 x 914 mm high.
Type:	Atosa Canada Refrigerated Work Top model MGF8410GR c/w (2) two hinged drawers and exterior temperature display.
Finish:	Standard, stainless steel
Alt. Manufactures:	True, Turbo Air, Traulsen

Item 16 Sandwich/Salad Refrigerated Counter

Quantity:	1
Size:	1219 x 760 x 1060 mm high.
Type:	Atosa Canada Refrigerated Sandwich/Salad Counter model MSF8302GR c/w (2) two hinged doors, full compliment of pans and exterior temperature display.
Finish:	Standard, stainless steel
Alt. Manufactures:	True, Turbo Air, Traulsen

Item 17 Soiled Dish/Pot Washing Table

Quantity:	1
Size:	2125 x 750 x 890 mm high.
Construction:	As specified for sink construction, all welded and as shown on drawing details 4-K2.
Top:	2.0 mm s.s. with front turned up as specified for sink edge with splash at rear rolled up 200 mm, splayed and sealed to wall. At dishwasher turned down 25 mm bolted and sealed.
Sink Compartments:	(2) two 450 x 600 x 300 mm deep, each compartment sloped to centre lever wastes c/w s.s. hanger for rail assembly welded to front of sinks.
Pre-rinse Sink:	525 x 525 x 300 mm deep 1.6 mm s.s. pre-rinse sink c/w s.s. crumb cup and lever drain assembly.
Pre-rinse Basket:	1.2 mm s.s. all welded in (2) two sections with perforated bottoms and solid sides c/w 12 mm dia. s.s. tube crossrails baskets 125 mm deep. Baskets flanged to hang over sink compartment to allow movement of dish racks across compartment.
Rail Assembly:	(2) two sets, 32 mm wide s.s. all welded channel removable rail assembly. Rail assembly flanged to hang over sink compartments to allow movement of dish racks across compartment.
Faucet:	(1) one T & S splash mount faucet with 350 mm long nozzle.
Pre-rinse Faucet:	Splash mount pre-rinse faucet T & S model B-0133-12-CR-BC c/w 300 mm long "add a faucet" assembly, integral check valves, water saver spray valve, and s.s. flexible hose and wall hook and adapters to fit manufacturers hose.
Sorting Rack	
Size:	600 x 500 mm deep.
Construction:	1.6 mm s.s. formed as shown sloped to 12 mm dia. s.s. drain nipple welded into apex of angle. Edges of shelf turned up 50 mm and folded.
Gussets:	2 mm s.s. turned in 38 mm at top welded to shelf. Gussets and shelf attached to wall with lag bolts and shields.
Gussets, Saddles Legs, Bracing, feet:	As shown, with bracing arranged for garbage can at left-hand end.

Item 18 Dishwashing Machine

Quantity:	1
Size:	625 x 625 x 1778 mm high.
Type:	Champion model DH-6000-VHR Ventless single door dishwasher, Electrically heated, thermostatically controlled c/w low water cut-off and built-in booster c/w internal condensing system.
Equipment:	Unit c/w automatic door interlock feature.
Extra Equipment:	Supply unit c/w A-H 7810 G or Bryant 60003 disconnect switch c/w NEMA enclosure suitably rated for motors mounted on rear wall as required by hydro code. - Single electrical supply connection.
Alt. Manufacturers:	Hobart, Meiko

Item 19 Clean Dish Table

Quantity:	1
Size:	1550 x 750 x 890 mm high.
Construction:	S.s. all welded as specified for worktables.
Top:	1.6 mm s.s. with front turned up as specified for sink edge with splash at rear rolled up 200 mm, splayed and sealed to wall. At dishwasher turned down 25 mm bolted.
Undershelving:	1.6 mm s.s. formed over crossrails removable in sections.
Gussets, Saddles:	
Legs, Bracing & feet:	As shown and as specified.

Item 19A Wall Hung Drying Rack

Quantity:	1 section
Size:	1220 mm long total.
Manufacturers:	Metro
Components:	
	(2) 33PDFK3 - Metroseal post c/w mounting hardware.
	(2) 1WS14K3 - Metroseal shelf support.
	(2) 1WS18K3 - Metroseal shelf support.
	(1) 1448LS - Louvred/Embosed s.s. shelf
	(1) 1848LS - Louvred/Embosed s.s. shelf
Installation:	Anchor to reinforced rear wall 1524 mm A.F.F over clean dish table.

Item 20 Number not used.

Item 21 Ice Maker & Bin

Quantity:	1
Size:	560 x 695 x 1938 mm high.
Type:	320 Lb/ 24 hr capacity air cooled cuber to produce half or crescent cubes on 300 Lb storage bin.
Storage Bin	
Quantity:	1
Size:	559 x 826 x 1168 mm high.

	Type:	PVC coated galvanized steel 320 Lb ice storage capacity.
	Manufacturers:	Scotsman, Manitowoc, Hoshizaki, Ice-O-Matic
Item 22	Soiled Dish Cart	
	Quantity:	1
	Type:	Metro Wire myCart Series polymer Deep Ledge utility cart model MY2030-34G.
	Construction:	Polymer moulded shelves (3) three with nickel chrome plated uprights 125 mm dia. casters.
	Colour:	Blue
	Alt. Manufacturer:	Cambro
Item 23	Hand Wash Sink	
	Quantity:	1
	Size:	430 x 380 x 350 mm high.
	Type:	Vollrath model K1410C hand wash sink c/w goose neck faucet, strainer, and wall bracket.
	Alt. Manufacturer:	Atosa, Tarrison
Item 23A	Eye Wash Station	
	Quantity:	1
	Type:	Guardian model G1100 EyeSafe faucet-mounted eyewash, adjustable aerated outlet head mounted to faucet nozzle on item 23 faucet at dishwashing location.
Item 24	Mop/ Janitor's Closet	
	Quantity:	1
	Size:	1270 x 575 x 2142 mm high.
	Type:	Antonee model JCL-L or iFab equivalent double door s.s. janitor's closet and closet c/w janitor's sink, faucet, upper shelf, s.s. rear panel and broom & mop holder.
Item 25	Plate Storage Cupboard	
	Quantity:	1
	Size:	1220 x 600 x 2100 mm high.
	Construction:	19 mm plastic laminate plywood dowelled, glued and screwed.
	Top:	19 mm plastic laminate plywood.
	Finish:	Interior white plastic laminate, throughout. Plastic laminate (colour and type to Architects selection) on all exterior surfaces.
	Shelves:	19 mm plastic laminate plywood (1) fixed (4) adjustable on pilaster strips and clips.
	Doors:	19 mm plastic laminate plywood flush mount doors c/w cylinder locks, friction catch, chrome plated pivot hinges and chrome plated pull handle.
	Bottom:	As specified for shelves.

	Base:	50 x 100 mm wood perimeter base c/w s.s. kick base.
Item 26	Clean Dish Cart	
	Quantity:	1
	Type:	Metro Wire myCart Series polymer Deep Ledge utility cart model MY2030-34G.
	Construction:	Polymer moulded shelves (3) three with nickel chrome plated uprights 125 mm dia. casters.
	Colour:	Gray
	Alt. Manufacturer:	Cambro
Item 27	Bun Pan Rack	
	Quantity:	1
	Type:	Brute BOA-1820 A to suit owner's bake pans (19) nineteen capacity (obtain sample).
	Equipment:	Standard including bumpers and all swivel casters.
	Alt. Manufacturer:	Metro, Tarrison
Item 28	Proofing/Hot Holding Cabinet	
	Quantity:	1
	Size:	650 x 832 x 1778 mm high.
	Type:	Metro model C519-CFC-U 1 Series mobile single door Heated Holding and Proofing Cabinet. Cabinet c/w thermostat controls 16 amp/ 120/1/60
	Equipment:	Standard, including universal slides to accommodate bun pans and s.s. food pans, casters, 15 amp cord & plug and corner rubber bumpers.
	Alt. Manufacturers:	Brute, Cres Cor, FEW, Vulcan.
Item 29	Work Counter	
	Quantity:	1
	Size:	650 x 750 x 914 mm high.
	Construction:	S.s. all welded as shown and as specified for counter construction. Counter c/w s.s. rear back liner.
	Top:	1.6 mm s.s. with all ends down and under.
	Intermediate Shelf:	1.6 mm s.s. adjustable on pilaster strips.
	Saddles:	2.0 mm galvanized
	Feet:	42 mm dia. x 150 mm long s.s. legs c/w adaptor toes and fixing plate secured to underside of s.s. counter.
Item 30	Number not used.	

BASEMENT KITCHEN & BAR

Item B1 Refrigerator

Quantity:	3
Size:	1375 x 750 x 1991 mm high.
Type:	Atosa Canada reach in solid door refrigerator model MBF8507GR c/w door locks and exterior temperature display.
Finish:	Standard, stainless steel
Alt. Manufactures:	True, Turbo Air

Item B2 Freezer

Quantity:	1
Size:	1375 x 750 x 1991 mm high.
Type:	Atosa Canada reach in solid door freezer model MBF8503GR c/w door locks and exterior temperature display.
Finish:	Standard, stainless steel
Alt. Manufactures:	True, Turbo Air

Item B3 Bun Pan Rack

Quantity:	1
Type:	Brute BOA-1820 A to suit owner's bake pans (19) nineteen capacity (obtain sample).
Equipment:	Standard including bumpers and all swivel casters.
Alt. Manufacturer:	Metro, Tarrison

Item B4 Mobile Work Table

Quantity:	2
Size:	1525 x 750 x 890 mm high.
Construction:	As specified for work tables.
Top:	1.6 mm s.s. with all edges turned down and under.
Undershelves:	1.6 mm s.s. mitred around legs and welded as specified. Shelves shall be 250 mm and 550 mm from the floor.
Saddles, Legs:	As specified for work tables.
Casters:	125 mm dia. all swivel medium duty, (2) two c/w brakes.

Item B5 Work Table

Quantity:	1
Size:	1525 x 750 x 890 mm high
Construction:	S.s. all welded as shown and as specified for work tables.
Top:	1.6 mm s.s. with front turned down and under. Splash at rear and sides rolled up 150 mm, boxed and sealed to rear wall.
Overshelves:	(2) two1.6 mm s.s., 1525 mm long mounted on 25 mm s.s. sq. tube uprights welded to shelf and anchored to reinforced rear wall.

	Saddles, legs bracing & feet:	As shown and as specified, open below for cart storage.

Item B6 2-Compartment Sink Table

Quantity:	1
Size:	2350 x 750 x 890 mm high.
Construction:	S.s. all welded as specified for sink construction and shown.
Top:	1.6 mm s.s. with front and ends turned down and under, at rear rolled up 150 mm, splayed, and sealed to rear wall.
Sink Compartment:	(2) two 600 x 600 x 300 mm deep, sloped to wastes.
Wastes:	Corner waste as specified, c/w perforated s.s. guard and overflow preventor drain pipe.
Faucet:	Splash mount 200 mm centre faucet with 300 mm long nozzle (T & S model B-0231 or approved equivalent).
Overshelf:	1.6 mm s.s., 2350 mm long mounted on 25 mm s.s. sq. tube uprights welded to shelf and anchored to reinforced rear wall with lag bolts.
Gussets, Saddles, Legs, Bracing, Feet:	As shown and as specified.

Item B7 Combi Oven & Stand

Quantity:	1
Size:	1117 x 800 x 788 mm high less stand.
Type:	Electric boiler-free counter combi oven/steamer. Unit to operate as dry heat oven, pressure-less steamer and a combination thereof c/w wash down hose and temperature probe.
Capacity:	Oven cavity size to accommodate minimum of (6) –457 x 661 x 25 mm sheet pans or (12) 305 x 510 x 65 mm steam table pans.
Finish:	S.s. interior and exterior.
Extra:	- S.s. stand c/w tray slides. - Automatic compartment washing system. - Cook & Hold Feature. - Retherm Feature. - Manual program override feature. - Easy Touch Digital Controls. - Two speed fan.
Stand:	Combi oven mobile stand c/w s.s. rack slides.
Installation:	Install unit on specified stand.
Manufacturers:	Alto Shaam CTP6-20E, Convotherm maxx pro C4eT 6.20 ES-N

Item B7A Condensate Hood

Quantity:	1
Type:	Halton Ventless Condensate hood model ConoVent for 6.20 and 10:20 ES/EB models.
Finish:	Stainless Steel.
Installation:	Mount unit on item B7 as per manufacturer's instructions, leave ready for electrical and mechanical connections by

other trades.

Item B7B Water Filter

Quantity:	1
Type:	Supply water filter as per manufacturer's recommendations. Water filter installed as shown on drawing K1 mounted on back wall in water supply line.

Item B8 Garbage Can & Dolly

Quantity:	1
Type:	Rubbermaid model 2620 garbage can and 2640 conversion dolly.

Item B9 Hand Wash Sink

Quantity:	1
Size:	430 x 380 x 350 mm high.
Type:	Vollrath model K1410C hand wash sink c/w goose neck faucet, strainer, and wall bracket.
Alt. Manufacturer:	Atosa, Tarrison

Item B10 Number not used.

Item B11 Rack Shelf

Quantity:	1
Type:	Metropolitan adjustable wire Super Erecta shelving.
Size:	914 x 457 x 2210 mm high. Each section c/w (5) five only shelves and uprights.

Item B12 High Density Storage System

Quantity:	(1) one system.
Type:	Metropolitan Wire adjustable wire Super Erecta shelving.
Quantity:	(1) one assembly consisting of: (2) two - 1524 x 610 x 2210 mm stationary end units. (6) Six - 1524 x 457 x 2210 mm mobile units. Assembly c/w bumpers, posts, 125 mm dia. casters and s.s. and nylon roller assemblies.
Shelves:	Each shelving section c/w (5) five shelves.
Track set:	Overhead track set approx. 3950 mm long heavy-duty extruded aluminium track and joining channels fastened to stationary end units.

Item B13 Utility Cart

Quantity:	1
Type:	Metro Wire myCart Series polymer Deep Ledge utility cart model MY2030-34G.
Construction:	Polymer moulded shelves (3) three with nickel chrome

		plated uprights 125 mm dia. casters.
	Colour:	Gray
Item B14	Grease Interceptor	N.I.C, By Mechanical Division
Item B15	Ice Maker	
	Quantity:	1
	Size:	378 x 575 x 850 mm high.
	Type:	Hoshizaki model AM-50BAE-AD self-Contained cuber with Built-in Storage Bin.
Item B16	Underbar Cooler	
	Quantity:	1
	Size:	606 x 610 x 813 mm high.
	Type:	Perlick Residential model HA244-4-1R c/w solid stainless steel door.
Item B17	Glasswasher	
	Quantity:	1
	Size:	482 x 534 x 750 mm high.
	Type:	Lamber model Glasswasher model S480-ek.
Item B18	Sink & Faucet	N.I.C, By Mechanical Division
Item B19	Bar Top & Counters	N.I.C, By Millwork Division
	Elec. Receptacles	(2) two Nema 5-15R receptacles recessed in counter in specified location by Electrical Division.

CAFÉ

Item C1	Refrigerated/Dry Display Case	
	Quantity:	1
	Size:	965 x 856 x 1701 mm high.
	Type:	CDS Grab N' Go Refrigerated Self Serve/Dry Top Serve Case model RSDS-6738.
	Extra :	Evaporator condensate pan.
Item C2	Sandwich/Salad Refrigerated Counter	
	Quantity:	1
	Size:	699 x 750 x 1060 mm high.
	Type:	Atosa Canada Sandwich/Salad Top Refrigerator model MSF8301GR c/w (8) eight pans and exterior temperature display.
	Finish:	Standard, stainless steel
	Alt. Manufactures:	True, Turbo Air

Item C3	Work Front Counter	
	Quantity:	1
	Size:	3830 x 750 & 560 x 914 mm high.
	Construction:	S.s. all welded as shown and as specified for counter construction. Base cabinet constructed as detailed open below for waste bin storage and item C5.
	Top:	1.6 mm s.s. with front and ends turned down and under, at rear rolled up 150 mm and folded. Splash cut for electrical Receptacle installation.
	Hand Wash Sink:	265 x 365 x 200 mm deep 1.6 mm s.s. sink compartment sloped to drain, c/w 100 mm centre deck mount faucet and centre crumb cup waste.
	Intermediate Shelf:	1.6 mm s.s. adjustable on pilaster strips.
	Saddles:	2.0 mm galvanized
	Feet:	42 mm dia. x 150 mm long s.s. legs c/w adaptor toes and fixing plate secured to underside of s.s. counter.
	Kick Plate:	1.2 mm s.s. removable finishing kick plate at front and sides scribed to floor.
Item C4	Bar Frame & Top	N.I.C, By Millwork Division
	Size:	3700 x 350 x 1100 mm high.
	Utility Receptacles:	(7) seven NEMA 5-20R outlets recessed in bar frame c/w with s.s. cover plates for connection by electrical division.
Item C5	Freezer (undercounter)	
	Quantity:	1
	Size:	699 x 750 x 864 mm high.
	Type:	Atosa Canada Undercounter Reach-in Freezer model MGF8405GR c/w exterior temperature display.
	Finish:	Standard, stainless steel
	Alt. Manufactures:	True, Turbo Air
Item C6	Soup Warmer	
	Quantity:	1
	Type:	Vollrath Cayenne Round Heat 'N Serve Rethermalizer model HS-11 c/w 11 qt. s.s. insert and hinged cover.
	Alt. Manufactures:	Hatco, Wells, APWWyott
Item C7	Accessible Counter	N.I.C, By Millwork Division
Item C8	P.O.S. Station	N.I.C, By Owner
Item C9	Back Bar Refrigerator	
	Quantity:	1
	Size:	1727 x 813 x 1015 mm high.
	Type:	Atosa Canada Back Bar Cooler model MBB69GR c/w exterior temperature display and cylinder locks.

	Finish:	Standard, stainless steel
	Alt. Manufactures:	True, Turbo Air
Item C10	Number not used.	
Item C11	Sink & Faucet	
	Quantity:	1
	Type:	Tarrison model DI-14 drop-in sink compartment or Equivalent.
	Faucet:	T & S or Equivalent 100 mm centre deck mount faucet c/w 300 mm high swivel goose neck.
	Installation:	Install in item C13 top.
Item C12	High Speed Oven	
	Quantity:	1
	Size:	356 x 595 x 620 mm high.
	Type:	Merrychef High Speed Oven model eikon e2s.
	Finish:	Classic Exterior
Item C13	Back Bar Counter	N.I.C, By Millwork Division
	Quantity:	1
	Size:	1700 approx. x 750 x 1015 mm high.
	Construction:	18 mm plastic laminate plywood.
Item C14	Coffee Brewer	
	Quantity:	1
	Type:	Bunn model AXIOM-DV-APS ST/PF w/ Gourmet Funnel Automatic Thermal Server Coffee Brewer, 3.5 kw, 208/1/60.
	Equipment:	Standard, including hot water faucet.
	Installation:	Connected through water filter item C15.
	Extra:	(1) one Bunn Airpot model 2.5l SST LA #32125.0000.
Item C15	Water Filter	
	Quantity:	1
	Type:	Everpure Insurice QC71 Single – 4FC-S or as per manufacturer's recommendation, installed in item C13 below on rear wall as shown on detail B-K4 in water supply line.
Item C16	Hot Beverage Dispenser	
	Quantity:	1
	Size:	320 x 612 x 833 mm high.
	Type:	Bunn model Imix-3 Black #36900 Cappuccino Hot Beverage Dispenser.

Item C17 Espresso Cappuccino Machine

Quantity:	1
Type:	Bunn model BW4C-CTM-P-RS Automatic Espresso/ Cappuccino machine c/w milk delivery system.
Installation:	Connected through water filter item C15.

Item C18 Coffee Air Pot

Quantity:	4
Type:	Bunn Airpot model 2.5l SST LA #32125.0000.

Item C19 Millwork Storage Counter N.I.C, By Millwork Division

Quantity:	1
Size:	2175 approx. x 565 x 1015 mm high.
Construction:	18 mm plastic laminate plywood.

Item C20 Waste Bin & Dolly

Quantity:	1
Type:	Rubbermaid model Slim Jim 23 GAL. Container SKU # FG354060GRAY waste bin c/w Resin Dolly Swing Lid.

Item C21 Condiment Stand

Quantity:	1
Size:	1250 x 600 x 864 mm high.
Construction:	Plastic laminate (to Architect's selection) on 19 mm plywood, glued and screwed.
Top:	1.6 mm s.s. with front and ends turned down and under, at rear rolled up 100 mm and boxed.
Doors:	Plastic laminate (to Architect's selection) on 19 mm particle core flush mount doors. Doors c/w full length chrome plated piano hinges, and interior catches and cylinder locks. Door edges trimmed with 3 mm solid PVC edges (to match laminate).
Shelves:	Plastic laminate (white) on 19 mm plywood adjustable shelves on pilaster strips.
Casters:	(4) four 100 mm dia. All swivel casters, (2) two c/w brakes.

Item C22 Panini Press

Quantity:	1
Size:	400 x 457 x 250 mm high.
Type:	Equipex model Panini Electric Panini Press 12 amp 208/1 c/w Nema 6-15P plug.

Item C23 Condiment Stand (Outdoors)

Quantity:	1
Size:	1250 x 600 x 864 mm high.
Construction:	Plastic laminate (to Architect's selection) on 19 mm plywood, glued and screwed.
Top:	1.6 mm s.s. with front and ends turned down and under, at rear rolled up 100 mm and boxed.
Doors:	Plastic laminate (to Architect's selection) on 19 mm particle core flush mount doors. Doors c/w full length chrome plated piano hinges, and interior catches and cylinder locks. Door edges trimmed with 3 mm solid PVC edges (to match laminate).
Shelves:	Plastic laminate (white) on 19 mm plywood adjustable shelves on pilaster strips.
Casters:	(4) four 100 mm dia. All swivel casters, (2) two c/w brakes.

STANDARD DRAWINGS INCLUDED FORM PART OF THIS SECTION

D-2	Edge details
D-3	Table details

END OF SECTION

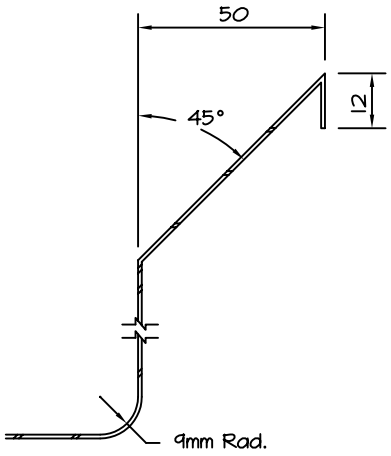

ROLLED UP & SPLAYED

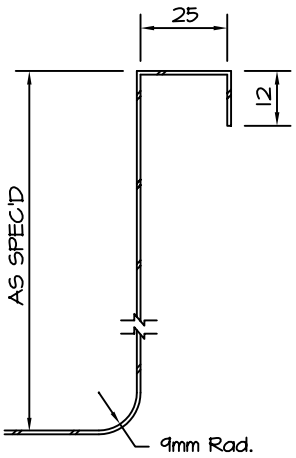

ROLLED UP & BOXED

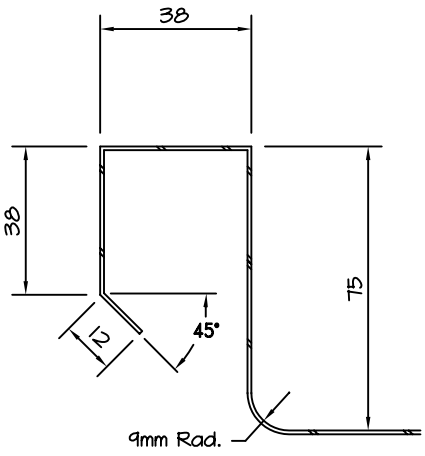

SINK EDGE

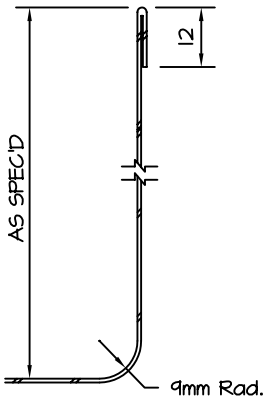

ROLLED UP & FOLDED

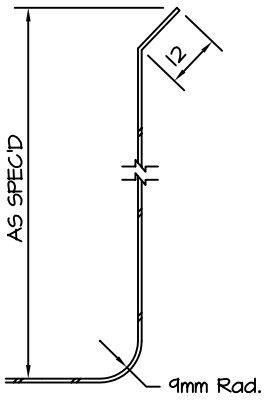

ROLLED UP & SET

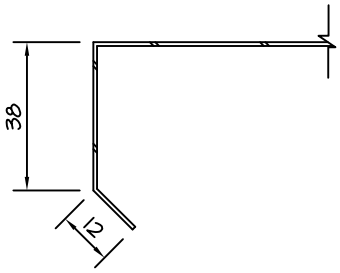

TURNED DOWN & IN @ 45°

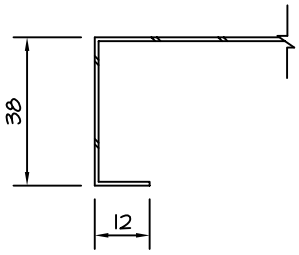

TURNED DOWN & BOXED

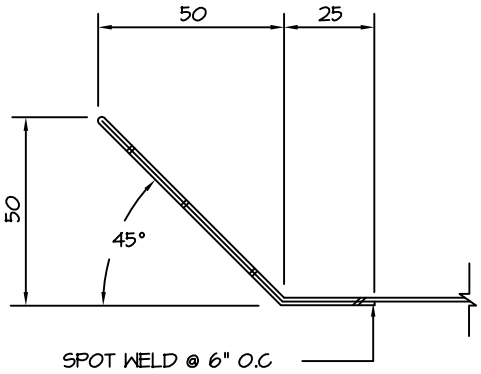

DISH TABLE EDGE

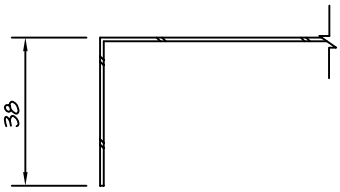

TURNED DOWN FLAT

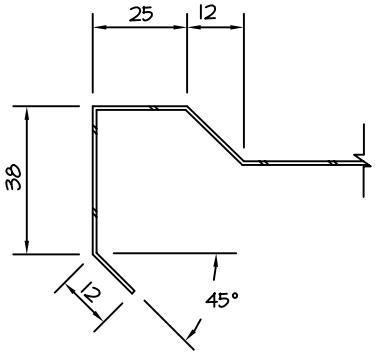

DISHED & BOXED

VAN VELZEN + RADCHENKO DESIGN ASSOC. LTD.
FOOD SERVICE CONSULTANTS
FCSI

VAN VELZEN + RADCHENKO
DESIGN ASSOCIATES LIMITED
Food Service Consultants

DRAWN BY : TR

CHECKED BY : NVV

EDGE DETAILS

NO : D-2

DATE :

SCALE : 1 : 50

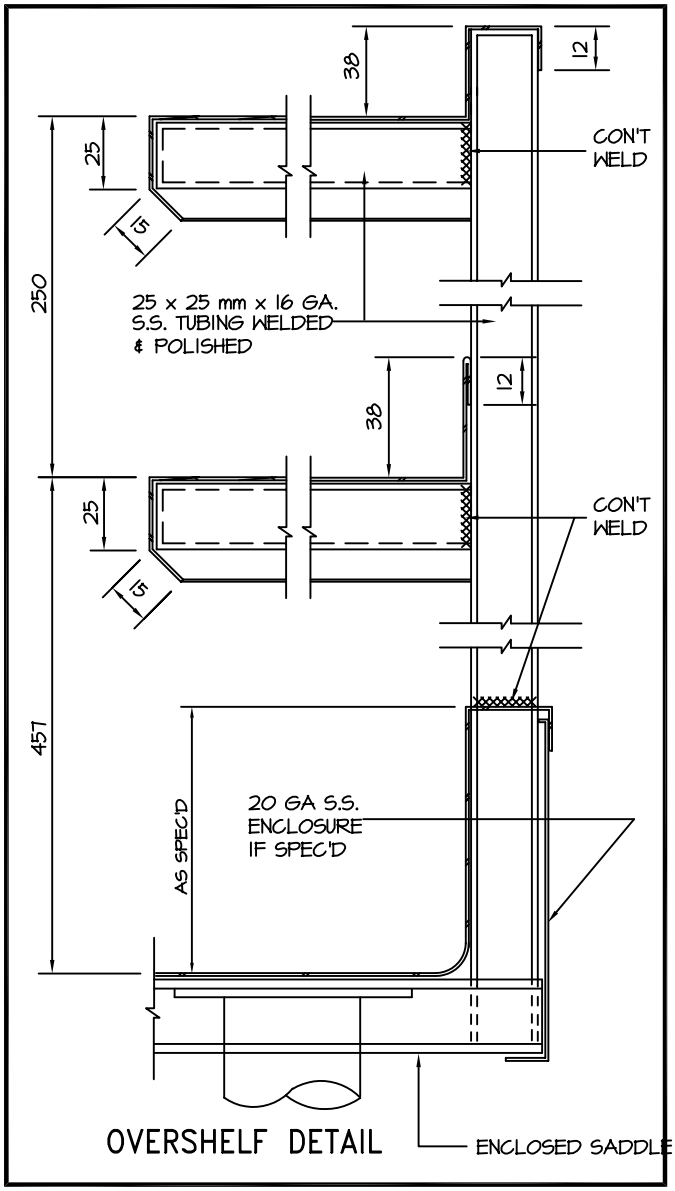

OVERSHELF DETAIL

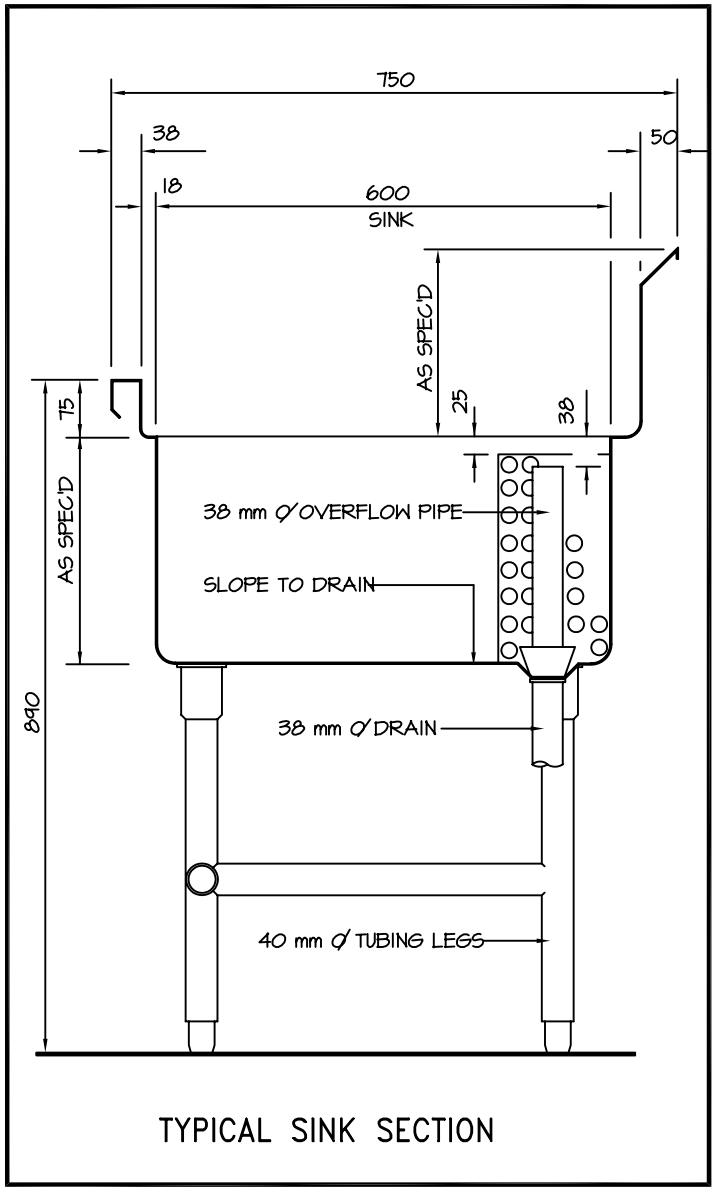

TYPICAL SINK SECTION

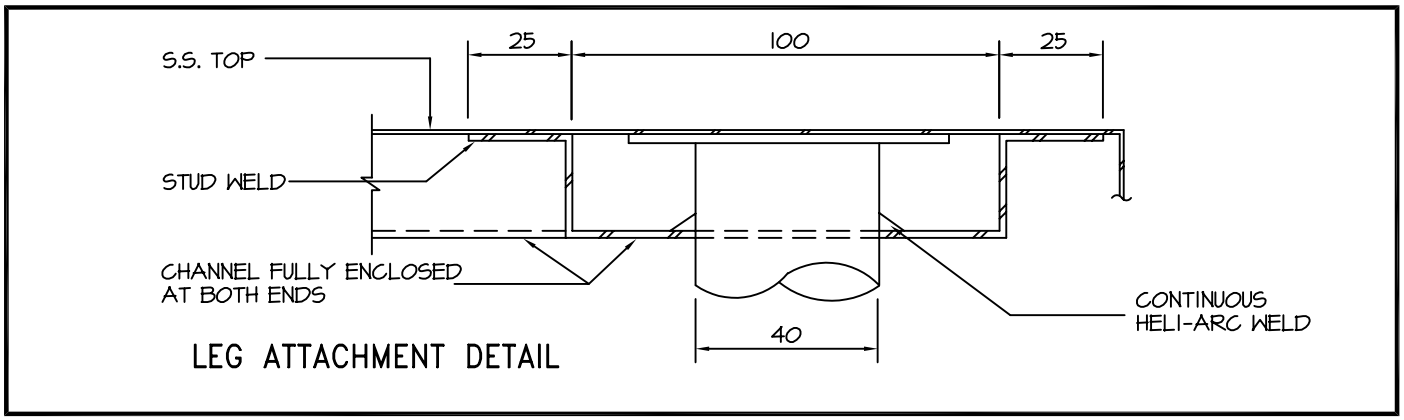

LEG ATTACHMENT DETAIL

VAN VELZEN + RADCHENKO DESIGN ASSOC. LTD.
FOOD SERVICE CONSULTANTS
FCSI

VAN VELZEN + RADCHENKO
DESIGN ASSOCIATES LIMITED
Food Service Consultants

DRAWN BY : TR

CHECKED BY : NVV

TABLE DETAILS

NO : D-3

DATE :

SCALE : N.T.S