GENERAL NOTES:

MAINTENANCE and ACCEPTANCE:
- ALL PLANT MATERIAL SHALL BE MAINTAINED BY THE CONTRACTOR IMMEDIATELY AFTER ANY PLANTING HAS BEEN INSTALLED AND SHALL CONTINUE UNTIL THE DATE OF FINAL ACCEPTANCE.
- SUCH MAINTENANCE SHALL INCLUDE ALL MEASURES NECESSARY TO ESTABLISH AND MAINTAIN ALL PLANTS IN AN ACCEPTABLE, VIGOROUS AND HEALTHY GROWING CONDITION INCLUDING CULTIVATING AND WEEDING, WATERING WHEN REQUIRED, PRUNING AND MAINTENANCE OF ALL ACCESSORIES.
- AT TIME OF INSPECTION FOR INITIAL & FINAL ACCEPTANCE, ALL PLANTING BEDS AND TREE PITS SHALL BE FRESHLY CULTIVATED, FREE OF WEEDS, LEAVES, BROKEN BRANCHES AND RUBBISH AND SHALL BE IN A NEAT AND TIDY CONDITION.
- ALL PLANT MATERIAL TO BE GUARANTEED FOR A PERIOD OF 2 (TWO) YEARS FROM THE DATE OF ACCEPTANCE BY THE LANDSCAPE ARCHITECT AND LOCAL AUTHORITY UNLESS OTHERWISE NOTED.
- MAINTAIN PLANTING BEDS AND TREE PITS FREE OF WEEDS THROUGHOUT THE GUARANTEE PERIOD.
- THE DEVELOPER SHALL REGULARLY REMOVE DEBRIS FROM THE WETLAND UNTIL THE COMPLETION OF ALL BUILDING CONSTRUCTION WITHIN THE DEVELOPMENT.

UTILITIES:
- APPLICANT IS RESPONSIBLE FOR OBTAINING NECESSARY APPROVALS FROM THE UTILITY COMPANIES FOR WORKS WITHIN THE MUNICIPAL BOULEVARD.
- ALL UTILITIES WITHIN THE BOULEVARDS MUST BE LOCATED PRIOR TO COMMENCING CONSTRUCTION WITHIN THE BOULEVARD.

TREE LOCATION:
- NO TREES SHALL BE PLANTED UNDER OVERHEAD WIRES OR OVER UNDERGROUND SERVICES.
- TREES ARE NOT TO BE PLANTED LESS THAN 1M FROM CURBS, UNDERGROUND UTILITIES, SIDEWALKS AND DRIVEWAYS, 2m FROM FIRE HYDRANTS AND TRANSFORMERS, AND 4m FROM LIGHT STANDARDS.
- THE CONTRACTOR IS TO STAKE OUT LOCATIONS OF TREE PITS. THIS STAKE OUT IS TO BE INSPECTED BEFORE THE EXCAVATION OF ANY TREE PITS.
- BEFORE THIS STAKE OUT, THE CONTRACTOR IS TO REQUEST A STAKE OUT ALL UNDERGROUND SERVICES.
- THE LANDSCAPE ARCHITECT AND THE MUNICIPALITY MAY, AT THEIR DISCRETION REDISTRIBUTE TREE LOCATIONS, PRIOR TO PLANTING, IN ORDER TO MINIMIZE CONFLICTS WITH UTILITIES, DRIVEWAYS AND INTERSECTION VISIBILITY.

TOPSOIL:
- USE EVENLY MIXED TOPSOIL OF FERTILE, FRIABLE NATURAL LOAM CONTAINING NOT LESS THAN 4% ORGANIC MATTER FOR CLAY LOAMS AND 2% MINIMUM ORGANIC MATTER FOR SAND LOAMS WITH AN ACIDITY RANGE OF 5.5 TO 7.5 pH..
- ALL TOPSOIL SHOULD BE FREE OF SUBSOILS, CLAY, STONES, ROOTS, EXCESS WATER, FROST AND OTHER EXTRANEOUS MATTER.

PLANTING:
(UNLESS OTHERWISE SPECIFIED)
- PREPARE PLANTING SOIL BY EVENLY MIXING FOUR PARTS SANDY TOPSOIL, ONE PART ORGANIC SOIL ADDITIVE WITH 500g. BONE MEAL AND 750g COMMERCIAL FERTILIZER PER CUBIC METER. THE FOREGOING RATES ARE SUBJECT TO ADJUSTMENT ON RECEIPT OF TOPSOIL ANALYSIS REPORT.
- EXCAVATE AND PROVIDE PLANTING SOILS AS PER PLANTING DETAILS.
- PROVIDE ALL SHRUBS AND TREES ACCORDING TO THE GUIDE SPECIFICATIONS FOR NURSERY STOCK OF THE CANADIAN NURSERY TRADE ASSOCIATION WITH REGARD TO QUALITY AND GRADING AND SIZED AS PER PLANT LIST.
- SPRAY ALL PLANTINGS IN LEAF WITH ANTIDESICCANT. PROVIDE TREES WITH STAKES.
- PLANTS ARE TO BE No. 1 NURSERY GROWN, UNDER PROPER CULTURAL PRACTICES, IN PARTICULAR WITH RESPECT TO AMPLE SPACING, PEST AND DISEASE CONTROL, AND BRANCH AND ROOT PRUNING.
- TREES ARE TO HAVE STURDY, STRAIGHT TRUNKS.
- TREES SHALL BE WELL BRANCHED AND BALANCED WITH A STRONG CENTRAL LEADER.
- DECIDUOUS SHADE TREES SHALL BE FREE OF BRANCHES NOT LESS THAN 1.8m ABOVE THE GROUND.
- ALL SHRUBS ARE TO BE PLANTED IN CONTINUOUS BEDS.
- DO NOT SOD BETWEEN PLANTS. EXCAVATE ENTIRE AREA OF SHRUB BED UNIFORMLY TO SPECIFIED DEPTH AND FILL WITH SPECIFIED PLANTING SOIL.

RODENT PROTECTION:
- THE CONTRACTOR SHALL BE RESPONSIBLE FOR THE PROTECTION OF ALL TREES AND SHRUBS FROM RODENT INJURY FOR THE DURATION OF THE GUARANTEE PERIOD. PROTECTIVE WIRE MESH GUARDS SHALL BE EMPLOYED AROUND ALL DECIDUOUS TREES. GUARDS SHALL BE INSTALLED PRIOR TO THE APPLICATION OF MULCH AND SHOULD BE PLACED A MINIMUM OF 50mm OUT FROM THE TREE TRUNK ON ALL SIDES. SUFFICIENT MESH SHOULD BE CUT TO COMPLETE THIS CIRCUMFERENCE AS WELL AS TO PROVIDE A MINIMUM OF 25mm OVERLAP.
- THE WIRE MESH GUARDS MUST BE OF GALVANIZED STEEL 12mm SQUARE MESH, 19 GAUGE AND SUPPLIED IN 600mm ROLLS. THE WIRE MESH CAN BE FASTENED WITH ANY ACCEPTABLE GALVANIZED WIRE TIE. ALL SHRUBS AND CONIFEROUS TREES SHALL HAVE AN APPLICATION OF "SKOOT" OR APPROVED EQUIVALENT RODENT FORMULA, TO BE APPLIED AT THE END OF OCTOBER. FOLLOW MANUFACTURER'S DIRECTIONS FOR APPLICATION.

SODDING:
- PREPARE A MINIMUM 100mm DEPTH OF TOPSOIL WITH A 10–6–4 COMMERCIAL FERTILIZER AT 7.3Kg./100Sq.m. AND SUPER PHOSPHATE AT 5Kg./100Sq.m.. THE PROPORTIONS SPECIFIED ARE SUBJECT TO ADJUSTMENT DEPENDING ON TOPSOIL ANALYSIS REPORT.
- LAY No. 1 NURSERY SOD ON ALL AREAS OF THE PROJECT NOT COVERED BY BUILDINGS OR PAVING.
- IMMEDIATELY AFTER INSTALLATION, SOD MUST BE WATERED AND ROLLED.

1/L200 LANDSCAPE GENERAL NOTES

NOTE :
- DO NOT DAMAGE ROOT BALL WHEN INSTALLING STAKES.
- WATER THOROUGHLY AFTER INSTALLATION.
- WILTPROOF IN NURSERY BEFORE DELIVERY.
- SOIL DEPTH FOR PLANTING OVER SLAB SHALL BE AS FOLLOWS:
  - DECIDUOUS TREE 1000 + 50 DRAINAGE COURSE.
  - CONIFEROUS TREE 950 + 20 DRAINAGE COURSE.
  - FLOWERING SHRUB 850 + 50 DRAINAGE COURSE.
  - SHRUB 700 + 50 DRAINAGE COURSE.
  - LAWN 400 + 50 DRAINAGE COURSE.

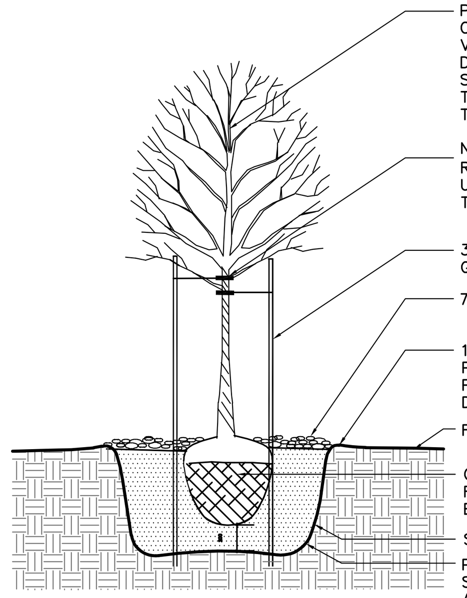

NOTE :
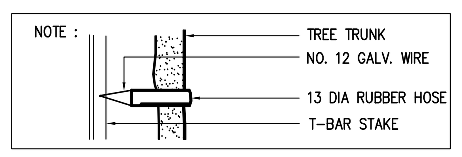

NOTE:
- DO NOT DAMAGE ROOT BALL WHEN INSTALLING STAKES.
- WATER THOROUGHLY AFTER INSTALLATION.
- WILTPROOF IN NURSERY BEFORE DELIVERY.

DECIDUOUS TREE PLANTING DETAIL

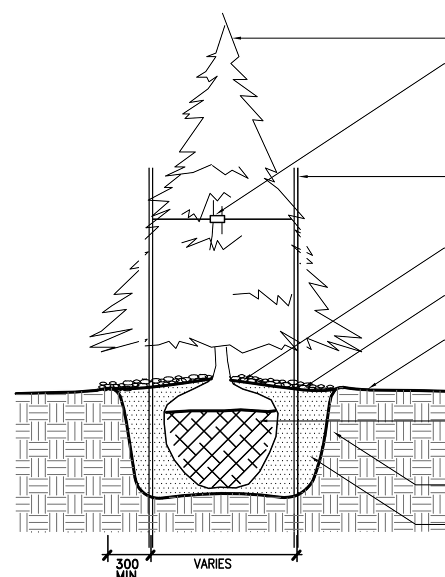

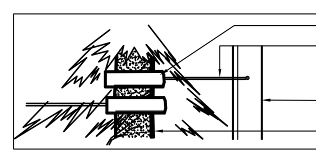

NOTE:
- DO NOT DAMAGE ROOT BALL WHEN INSTALLING STAKES.
- WATER THOROUGHLY AFTER INSTALLATION.

CONIFEROUS TREE PLANTING DETAIL

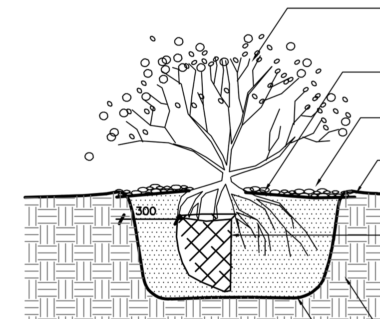

NOTE:
DO NOT ALLOW ANY PORTION OF CONTAINER TO REMAIN EXPOSED. WATER THOROUGHLY SUBSEQUENT TO INSTALLATION.

SHRUB PLANTING DETAIL

NOTES:
1. SEE SPECIFICATIONS FOR PLANTING SOIL REQUIREMENTS.
2. PROVIDE 100MM HIGH EARTH SAUCER AROUND SHRUB BED WITH 100MM WIDE SMOOTH BED EDGE TO RETAIN MULCH.
3. MINIMAL PERENNIAL POT SIZE IS 1 GALLON NURSERY STANDARD.
4. REMOVE PERENNIAL POT (INCL. FIBRE POT) AND SCARIFY ROOT BALL BEFORE PLANTING
5. ALL MEASUREMENTS ARE IN MILLIMETERS UNLESS STATED OTHERWISE

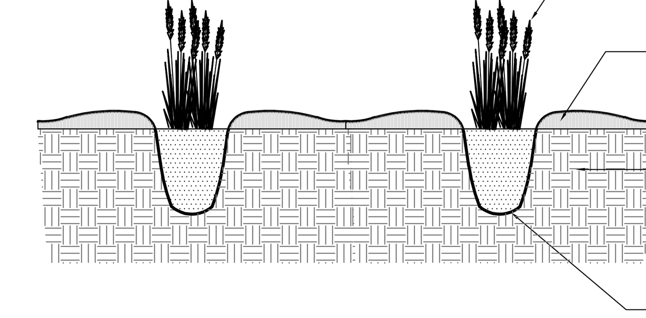

PERENNIAL PLANTING DETAIL

2/L200 PLANTING DETAILS

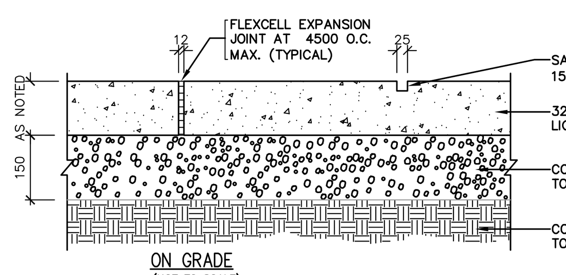

ON GRADE
(NOT TO SCALE)

NOTES:

TYPE 'G' LOADING:
CONCRETE TO BE 200mm THICK REINFORCED WITH 10M REBAR, 400 O/C BOTH WAYS. COMPACTED GRANULAR TO BE MIN 300mm THICK.

STANDARD PAVING
CONCRETE TO BE 125mm THICK.

REINFORCEMENT
FOR SIDEWALKS– NYLON SYNTHETIC FIBERS OR WELDED WIRE MESH 150X150 GRID.
FOR POOL DECK, PATIO, DRIVEWAY– 10M REBAR, 400mm O/C BOTH WAYS.

3/L200 CONCRETE PAVING

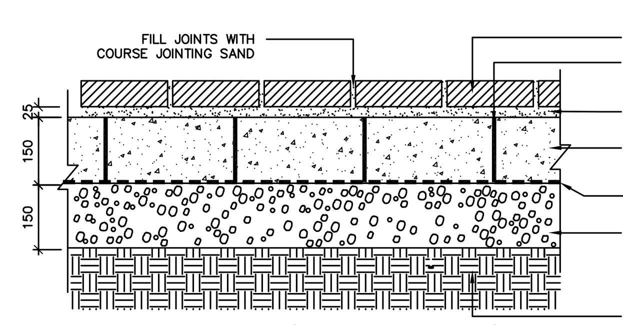

ON GRADE – VEHICULAR (PEDESTRIAN CROSSWALK)

NOTES:
- PRECAST CONCRETE UNIT PAVERS BY UNILOCK LTD. OR APPROVED EQUAL.
- COLOURS TO BE SELECTED BY LANDSCAPE ARCHITECT ON SITE.
- FOR PAVING LOCATIONS AND SPECIFICATIONS REFER TO PAVING SCHEDULE.

4/L200 VEHICULAR UNIT PAVERS

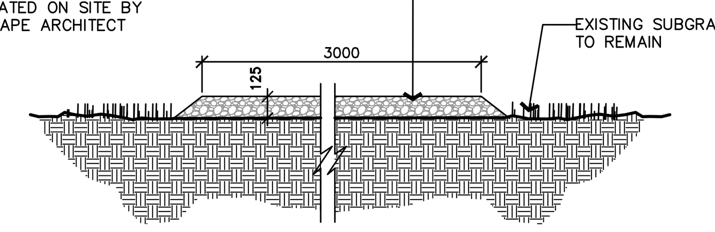

5/L200 WOODCHIP PATH

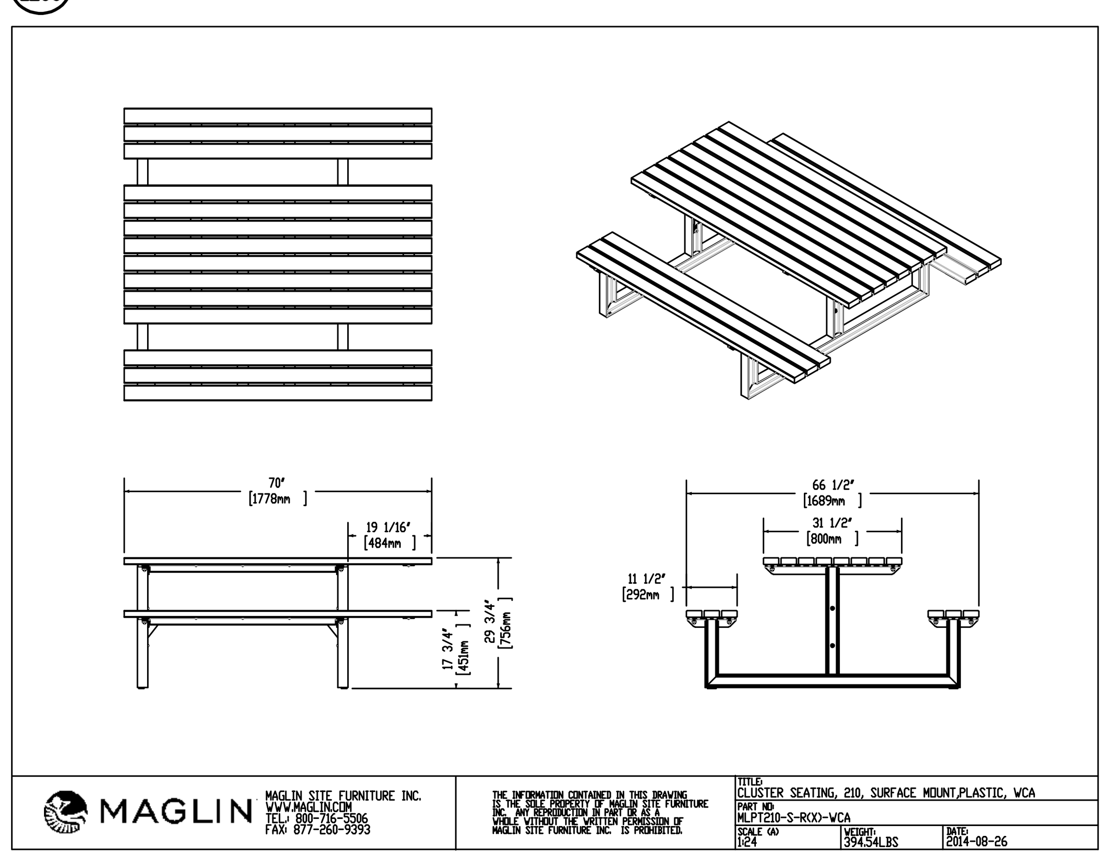

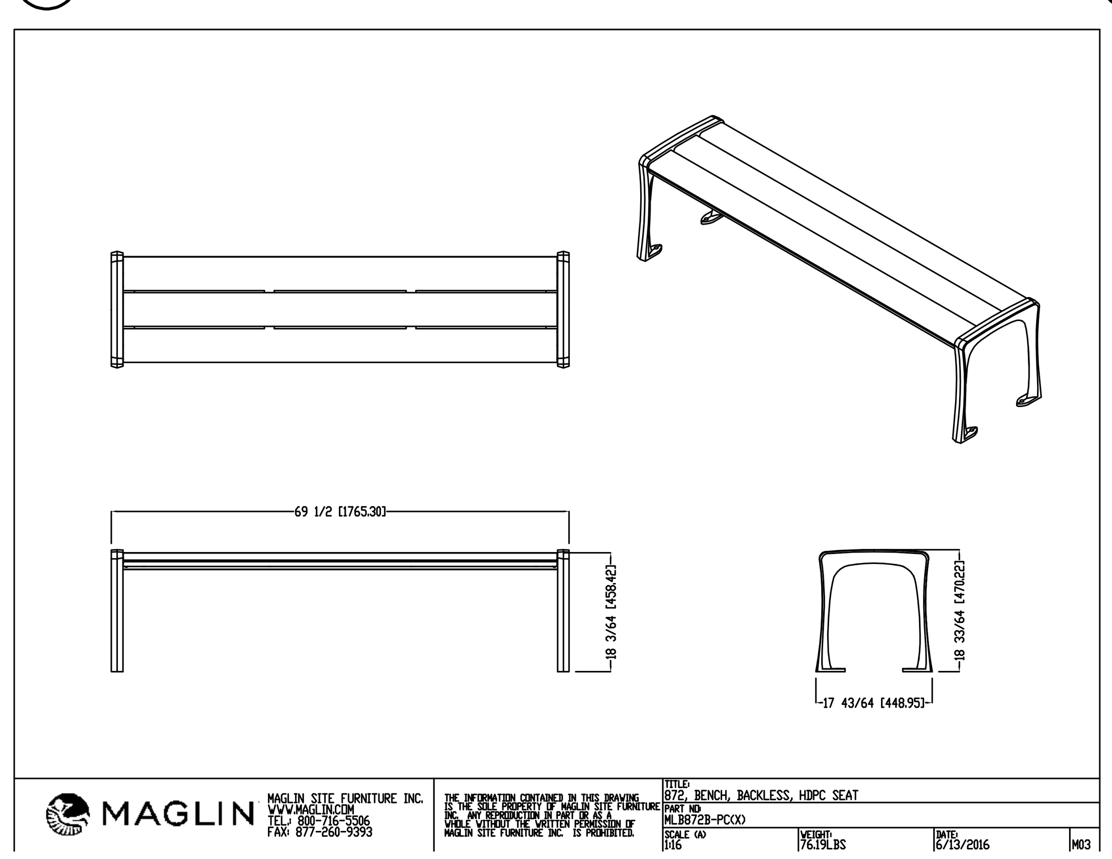

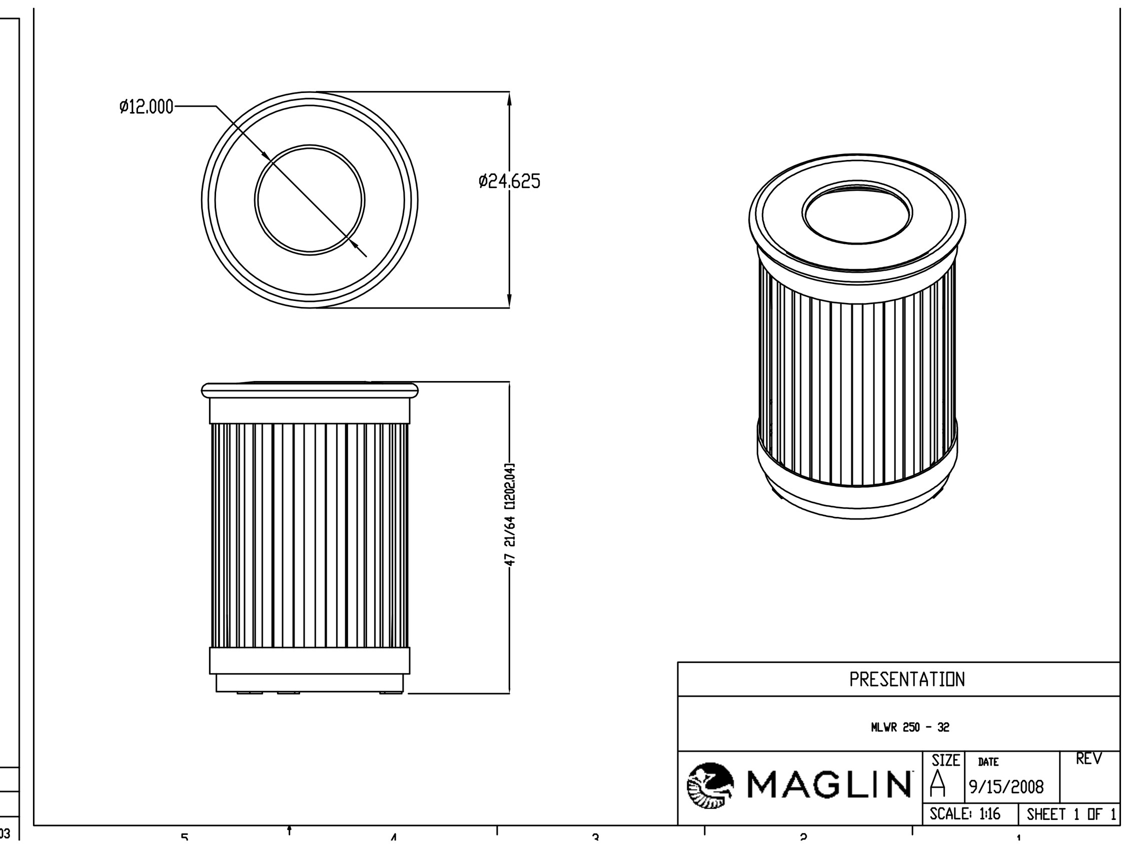

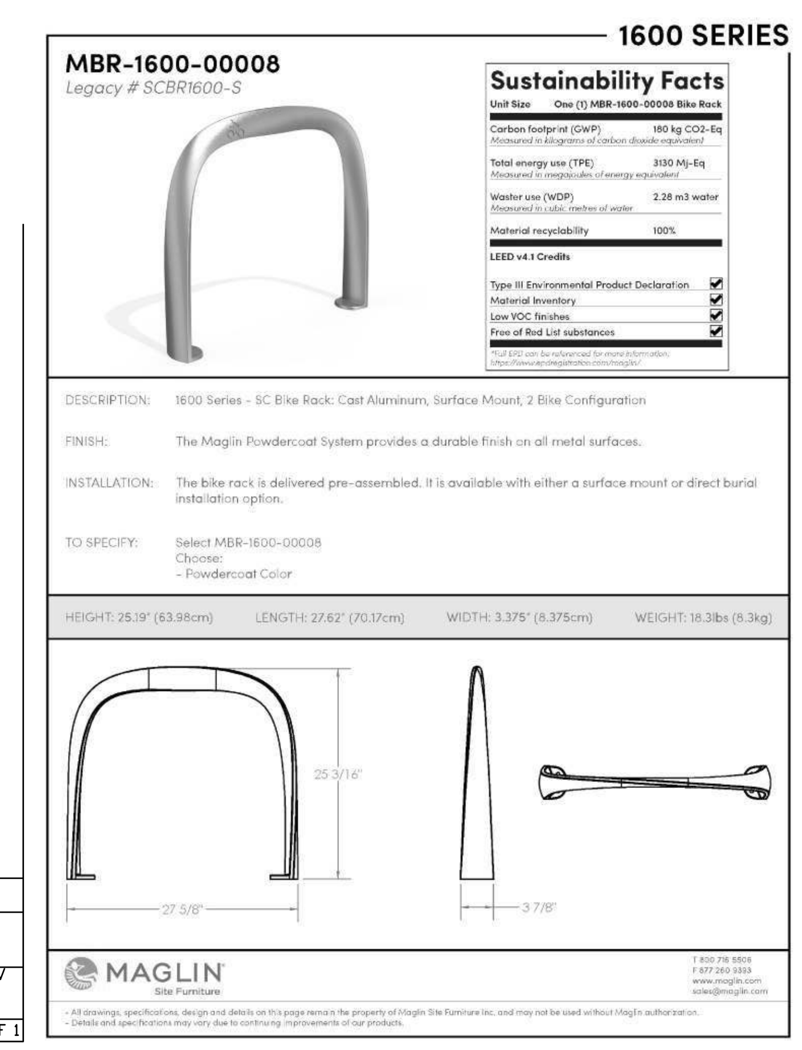

6/L200 SITE FURNITURE

GENERAL NOTES
- VERIFY ALL DIMENSIONS.
- DO NOT SCALE DRAWINGS.
- REPORT ANY DISCREPANCIES, DISCOVERED ERRORS, OR OMISSIONS TO THE LANDSCAPE ARCHITECT BEFORE PROCEEDING.
- IT IS ADVISED THAT CONTRACTORS CONTACT THE LANDSCAPE ARCHITECT PRIOR TO CONSTRUCTION TO ENSURE THE USE OF THE LATEST REVISED DRAWINGS.
- DRAWINGS AND SPECIFICATIONS ARE THE PROPERTY OF THE LANDSCAPE ARCHITECT.

No.	DATE.	REVISION.	BY.
2	MAR 28th, 2024	ISSUED FOR RESUBMISSION	JB
1	SEPT 29, 2023	ISSUED FOR SPA (FOLLOWING PREVIOUS LANDSCAPE SUBMISSION BY OTHERS)	JB

It is the responsibility of the Contractor and/or Owner to ensure that the drawings with the latest revisions are used for construction.

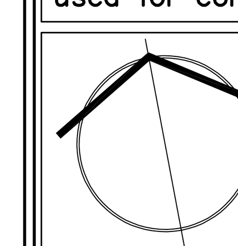

SBK
5770 HURONTARIO STREET, SUITE 320
MISSISSAUGA, ONTARIO, L5R 3G5
T: 416.695.4949 F: 905.712.3101
WWW.STRYBOS.COM
STRYBOS BARRON KING
LANDSCAPE ARCHITECTURE

PROJECT.
CITY OF VAUGHAN FIRE STATION 7-12
9511 WESTON ROAD, VAUGHAN

DRAWING TITLE.
LANDSCAPE DETAILS

SCALE.	PROJECT No. 23–5941
DATE. AUGUST 2023	
DRAWN BY. S.S.	DRAWING No. L200
CHECKED BY. J.B.	