March 26, 2024

Barrie Fire Station No. 6
245 Mapleview Drive East,
Barrie, ON

REGAL CONSULTING ENGINEERS INC.
208 Wyecroft Road, Suite 200
Mississauga, ON L6K 3S3
Phone: 905-844-3913

This addendum forms part of the contract documents and amends the original bidding requirements, drawings and specifications, as noted below.

ELECTRICAL

1. Delete and replace electrical drawings E6.0 & E6.0-A-1, with revised electrical drawing E6.0-A-2.
2. Delete and replace electrical drawings E6.1 & E6.1-A-1 with revised electrical drawing E6.1-A-2.
3. Delete and replace electrical drawing E9.0 with revised electrical drawing E9.0-A-1.
4. Find attached Fire Alarm Sequence of Operations, it shall be added to the specs section (28 13 10) for the fire alarm systems.

End of Addendum ME-2

ELECTRICAL PANEL:
120/208V-3Ø-60HZ, 225
AMP.MAIN BREAKER 200A

NEW PANELBOARD A SCHEDULE

DESCRIPTION	BRKR SIZE (A)	WATTS PER PHASE A	B	C	CR NO	BUS ABC	CR NO	WATTS PER PHASE A	B	C	BRKR SIZE (A)	DESCRIPTION
INTERIOR LIGHTING	15				01		02				15	INTERIOR LIGHTING
INTERIOR LIGHTING	15				03		04				15	INTERIOR LIGHTING
INTERIOR LIGHTING	15				05		06				15	INTERIOR LIGHTING
COFFE MAKER (*)	20				07		08				15	TIMER
NIGHT LIGHTING	15				09		10				20	INTERIOR LIGHTING
EXTERIOR LIGHTING	15				11		12				20	PYLON SIGN
EXTERIOR LIGHTING	15				13		14				15	INTERIOR LIGHTING
RECEPTACLES	15				15		16				15	EXTERIOR LIGHTING
RECEPTACLES	20				17		18				30	DRYER
RECEPTACLES	20				19		20				2P	
RECEPTACLES	20				21		22				20	WASHER
TVSS	30				23		24				20	RECEPTACLES (*)
	30				25		26				20	RECEPTACLES
	30				27		28				20	RECEPTACLES
RECEPTACLES	20				29		30				20	RECEPTACLES
RECEPTACLES	20				31		32				20	FRIDGE
RECEPTACLES	20				33		34				20	MICROWAVE (*)
WATER COOLER	15				35		36				20	DISHWASHER
RANGE	50				37		38				15	RECEPTACLES (*)
	2P				39		40				20	RECEPTACLES
RECEPTACLES	20				41		42				15	RECEPTACLES
EXTERNAL RECEPTACLE (*)	20				43		44				15	DOOR OPERATOR
T-SLOT CORD REEL RECEPTACLE	20				45		46				15	DOOR OPERATOR
T-SLOT CORD REEL RECEPTACLE	20				47		48				15	DOOR OPERATOR
T-SLOT CORD REEL RECEPTACLE	20				49		50				15	BUZZER
T-SLOT CORD REEL RECEPTACLE	20				51		52				15	DOOR OPERATOR
EMERGENCY RESPONSE SYSTEM	15				53		54				~~15~~	~~SECURITY PANEL~~
EMERGENCY RESPONSE SYSTEM	15				55		56				20	FIRE ALARM PANEL (**)
RANGE HOOD	20				57		58				~~20~~	~~RECEPTACLES~~
BIKE	20				59		60				20	RECEPTACLES
TREADMILL	20				61		62				20	RECEPTACLES
ELLIPTICAL	20				63		64				15	EF-11
PRINTER	15				65		66					
PRINTER	15				67		68					
CP-3	15				69		70				20	CO DETECTOR
	2P				71		72				15	AIRMATION INDUSTRIAL AIR CLEANER-1
CP-2A	15				73		74				2P	
	2P				75		76				15	AIRMATION INDUSTRIAL AIR CLEANER-2
AIRMATION INDUSTRIAL AIR CLEANER-3	15				77		78				2P	
	2P				79		80				15	TSCMM CONTROL PANEL
CO/NOX	15				81		82				25	ERV-1
SPARE	20				83		84				2P	

(*) GROUND FAULT INTERRUPTER CIRCUIT BREAKER
(**) C/W LOCK-OFF DEVICES

Addendum-1

Addendum-1

ELECTRICAL PANEL:
120/208V-3Ø-60HZ, 225
AMP.MAIN BREAKER 200A

NEW PANELBOARD B SCHEDULE

DESCRIPTION	BRKR SIZE (A)	WATTS PER PHASE A	B	C	CR NO	BUS ABC	CR NO	WATTS PER PHASE A	B	C	BRKR SIZE (A)	DESCRIPTION
EDH-1 @ FCU-1	20				01		02				20	CU-1
					03		04				2P	
					05		06				15	CP-1
FCU-2, FCU-4, FCU-5	15				07		08				15	FCU-6, FCU-7, FCU-8
	2P				09		10				15	
FCU-1, FCU-3	15				11		12				15	FCU-9, FCU-11
	2P				13		14				15	
FCU-12	15				15		16				15	EF-1, EF-2
	2P				17		18				15	EF-3, EF-4
FOLDING DOOR MOTOR	20				19		20				15	EF-5, EF-6
					21		22				20	EF-7, EF-8, EF-9
					23		24					
FOLDING DOOR MOTOR	20				25		26				15	EDH-2 @ FCU-2
					27		28					
					29		30					
FOLDING DOOR MOTOR	20				31		32				15	EDH-2 @ FCU-9
					33		34					
					35		36				20	WASTE COLLECTION OVERHEAD DOOR & LIGHTING
FOLDING DOOR MOTOR	20				37		38				15	EF-12, EF-13
					39		40				15	EF-14,EF-15
					41		42				15	SPARE
EDH-2 @ FCU-12	15				43		44				20	SU-1
					45		46				2P	
					47		48					
EDH-3 @ FCU-3	15				49		50				15	EDH-3 @ FCU-5
					51		52					
					53		54					
EDH-3 @ FCU-4	15				55		56				15	EDH-3 @ FCU-6
					57		58					
					59		60					
EDH-3 @ FCU-7	15				61		62				15	EDH-3 @ FCU-11
					63		64					
					65		66				15	UH-1,UH-1A,UH-2,UH-2A, UH-7
EDH-3 @ FCU-8	15				67		68				15	UH-3, UH-4, UH-5, UH-6
					69		70				20	ELECTRIC HUMIDIFIER
					71		72				15	CP-4
BAY CEILING FAN	20				73		74				15	P-1&P-2
CP-2B	15				75		76				2P	
	2P				77		78				50	AWHP-1
DOOR O/C SIGNAL LIGHTING	15				79		80				2P	
DOOR O/C SIGNAL LIGHTING	15				81		82				15	CABINET HEATER
FLOW METER	15				83		84				2P	

(*) GROUND FAULT INTERRUPTER CIRCUIT BREAKER
(**) C/W LOCK-OFF DEVICES

UPS BY SCHNEIDER ELECTRIC OR ANY APPROVED EQUIVALENT

PRODUCT	DESCRIPTION
GVSUPS10KFS	GALAXY VS UPS 10kW 208V FOR EXTERNAL BATTERIES, START-UP 5x8
GVSBPSU400-MP	GALAXY VS MAINTENANCE BYPASS PANEL, SINGLE UNIT, 10-30KW 208VL20-60kW 480V WALLMOUNT
GVSCBT2	GALAXY VS CLASSIC BATTERY CABINET, UL, TYPE 2

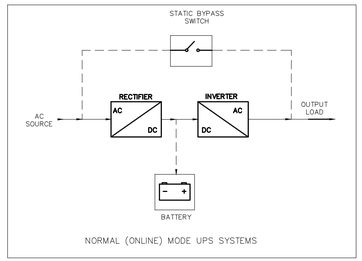

NORMAL (ONLINE) MODE UPS SYSTEMS

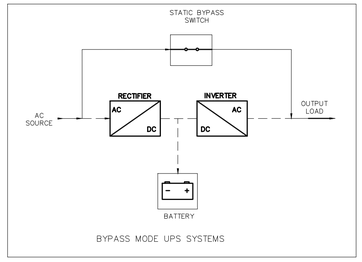

BYPASS MODE UPS SYSTEMS

Addendum-2

ELECTRICAL PANEL:
120/208V-3Ø-60HZ, 60
AMP.MAIN BREAKER 30A

NEW PANELBOARD C SCHEDULE

DESCRIPTION	BRKR SIZE (A)	WATTS PER PHASE A	B	C	CR NO	BUS ABC	CR NO	WATTS PER PHASE A	B	C	BRKR SIZE (A)	DESCRIPTION
IT RACK	20				01		02				20	RADIO SYSTEM
IT EQUIPMENT	20				03		04				~~20~~	~~PA SYSTEM~~
RECEPTACLES	20				05		06				20	FIRE ALARM MONITORING PANEL (**)
RECEPTACLES	20				07		08				~~20~~	~~RECEPTACLES~~
RECEPTACLES	20				09		10				20	RECEPTACLES
RECEPTACLES	20				11		12				20	RECEPTACLES
RECEPTACLES	20				13		14				20	RECEPTACLES
RECEPTACLES	20				15		16				20	RECEPTACLES
RECEPTACLES	20				17		18				20	RECEPTACLES
RECEPTACLES	20				19		20				2P	RECEPTACLES
RECEPTACLES	20				21		22				20	RECEPTACLES
RECEPTACLES	20				23		24				20	RECEPTACLES
RECEPTACLES	20				25		26				20	RECEPTACLES
RECEPTACLES	20				27		28				20	RECEPTACLES
RECEPTACLES	20				29		30				20	RECEPTACLES
RECEPTACLES	20				31		32				20	RECEPTACLES

(*) GROUND FAULT INTERRUPTER CIRCUIT BREAKER
(**) C/W LOCK-OFF DEVICES

Addendum-1

NOTES:

1. REFER TO MECH. EQUIPMENT WIRING SCHEDULE FOR BREAKER/FEEDER /CONDUIT SIZES.
2. CONTRACTOR SHALL LEAVE AT LEAST 12 METERS OF THE SECONDARY CABLES AT STAKED POLE LOCATION AND SHALL SUPPLY TWO (2) RIGID PVC CONDUITS TO RUN UP THE POLE COMPLETE WITH WEATERHEAD & CLIPS FOR INNPOWER TO INSTALL ON POLE. PROVIDE ENOUGH BRICK SAND AT THE POLE TO BACKFILL AT TIME OF CONNECTION. COORDINATE WITH HYDRO FOR EXACT SCOPE OF WORK AND HYDRO INSTALLATION REQUIRMENTS/STANDARDS AND PROVIDE ALL NECESSARY MATERIAL AND LABOR TO COMPLY ACCORDINGLY.
3. PROVIDE SUITABLE CONDUIT SIZE FOR CIRCUITING WIRES WITH A MAXIMUM OF 40% CONDUIT FILL.
4. PROVIDE LOW VOLTAGE RELAY PANEL FOR EXTERIOR LIGHTING C/W STEP DOWN TRANSFORMER. RELAY PANELS SHALL BE LOCATED ADJACENT TO RELEVANT LIGHTING PANEL VERIFY LOCATIONS OF PHOTOCELLS ON SITE.
5. PROVIDE ALL NECESSARY CONDUIT, WIRING, BACKBOXES ETC. FOR LIGHTING CONTROL FOR FULLY OPERATIONAL SYSTEM.
6. ALL FEEDER CABLES SHALL BE COPPER XLPE R90 FOR DRY LOCATIONS. COPPER XLPE RW90 FOR DAMWET LOCATIONS AND COPPER XLPE RWU90 FOR UNDERGROUND INSTALLATIONS, UNLESS NOTED OTHERWISE.
7. ALL BREAKERS OF 400A AND ABOVE SHALL HAVE ELECTRONIC TRIP UNITS.
8. CONTRACTOR SHALL PERFORM VOLTAGE DROP CALCULATIONS FOR ALL BRACH CIRCUITS AND SHALL MAINTAIN VOLTAGE DROP WITHIN PERMISSIBLE LIMITS AS PER OESC REQUIREMENTS AND PROVIDE PROPER WIRE SIZES ACCORDINGLY PRIOR TO COMMENCING OF ROUGH-IN CONDUIT. THE VOLTAGE DROP CALCULATIONS SHALL BE BASED ON MAXIMUM CIRCUIT AMPACITY.
9. PROVIDE LOCK-ON BREAKERS FOR CIRCUITS FEEDING EXIT LIGHTINGS, EMERGENCY BATTERY UNITS, FIRE ALARM PANEL, SERVER ROOMS, PA SYSTEM, MECHANICAL CONTROLS.
10. REFER TO FLOOR PLANS FOR TYPE OF DISCONNECT SWITCHES I.E. WEATHER PROOF, NON-FUSED, FUSED ETC.
11. ALL POWER EQUIPMENT SHALL BE OF SPRINKLER PROOF DESIGN.
12. VERIFY INTERRUPTION CAPACITY OF ALL EQUIPMENT WITH CO-ORDINATION STUDY PRIOR TO MANUFACTURING OF ELECTRICAL DISTRIBUTION EQUIPMENT.
13. ALL WIRING, FEEDERS & CABLES SHALL BE COPPER.
14. BREAKER SIZE TO SUIT APPLICATION AS PER SWITCHBOARD MANUFACTURER RECOMMENDATIONS.
15. PROVIED CONCRETE PAD FOR ATS & GENERATOR.

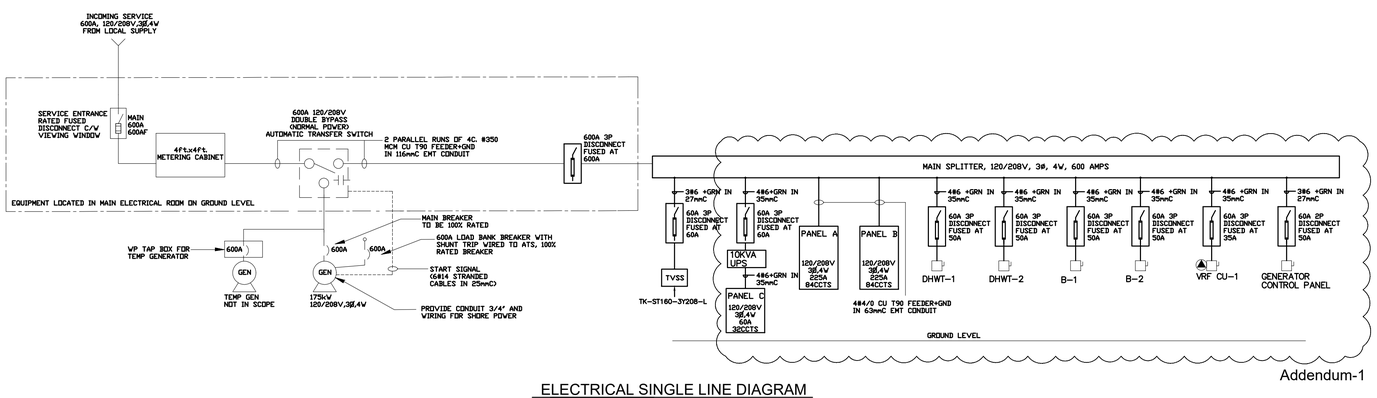

Addendum-1

ELECTRICAL SINGLE LINE DIAGRAM

The Contractor shall verify all dimensions prior to commencement of the work.
All print and specifications are the property of the Architect and must be returned upon completion of the work.

ISSUE OR REVISION

No.	Description	Date
1	ISSUED FOR REVIEW	2023-06-22
2	ISSUED FOR REVIEW	2023-06-27
3	ISSUED FOR REVIEW	2023-07-06
4	ISSUED FOR 100% DESIGN DEVELOPMENT	2023-08-08
5	ISSUED FOR DD SIGN-OFF	2023-08-23
6	PROGRESS SET	2023-09-22
7	75% SUBMISSION	2023-10-13
8	ISSUED FOR BUILDING PERMIT	2023-11-01
9	95% SUBMISSION	2023-11-10
10	100% SUBMISSION	2023-11-24
11	100% SUBMISSION	2024-02-12
12	ISSUED FOR TENDER	2024-02-23
13	ISSUED FOR TENDER	2024-02-26
14	ISSUED FOR ADDENDUM ME-1	2024-03-12
15	ISSUED FOR ESA PLAN REVIEW	2024-03-20
16	ISSUED FOR ADDENDUM ME-2	2024-03-26

PROJECT :
BARRIE FIRE STATION 6
845 MAPLEVIEW DRIVE EAST, BARRIE, ONTARIO

PROFESSIONAL SEAL :

DWG TITLE :
SINGLE LINE DIAGRAM & PANEL SCHEDULES

REGAL CONSULTING ENGINEERS INC.
CONSULTING MECHANICAL & ELECTRICAL ENGINEERS
208 Wyecroft Road, Suite 200, Oakville, Ontario L6K 3S3
PHONE: (905)844-3913
www.regal-eng.com

DATE :	JUN 14, 2023
SCALE :	NTS
DRAWN BY:	MS
CHECKED BY :	MA
DWG STATUS :	TENDER
PROJECT No. :	2023-401
DRAWING No. :	E6.0 -A-2
REVISION	

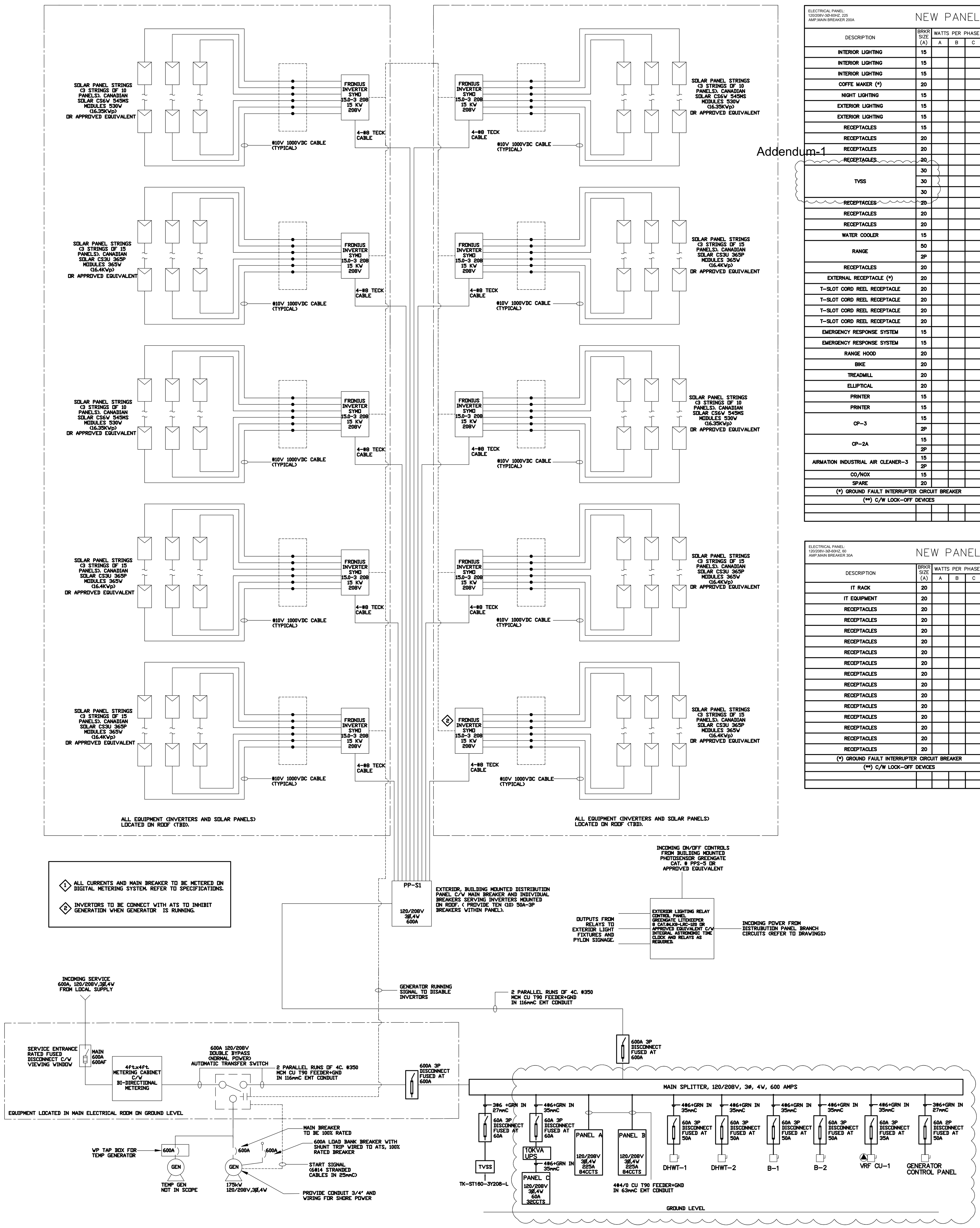

ELECTRICAL SINGLE LINE DIAGRAM WITH PHOTOVOLTAIC PANELS

ELECTRICAL PANEL: 120/208V-3Ø-60HZ, 225 AMP,MAIN BREAKER 200A

NEW PANELBOARD A SCHEDULE

DESCRIPTION	BRKR SIZE (A)	A	B	C	CR NO	BUS ABC	CR NO	A	B	C	BRKR SIZE (A)	DESCRIPTION
INTERIOR LIGHTING	15				01		02				15	INTERIOR LIGHTING
INTERIOR LIGHTING	15				03		04				15	INTERIOR LIGHTING
INTERIOR LIGHTING	15				05		06				15	INTERIOR LIGHTING
COFFE MAKER (*)	20				07		08				15	TIMER
NIGHT LIGHTING	15				09		10				20	INTERIOR LIGHTING
EXTERIOR LIGHTING	15				11		12				20	PYLON SIGN
EXTERIOR LIGHTING	15				13		14				15	INTERIOR LIGHTING
RECEPTACLES	15				15		16				15	EXTERIOR LIGHTING
RECEPTACLES	20				17		18				30	DRYER
RECEPTACLES	20				19		20				2P	
RECEPTACLES	20				21		22				20	WASHER
TVSS	30				23		24				20	RECEPTACLES (*)
	30				25		26				20	RECEPTACLES
	30				27		28				20	RECEPTACLES
RECEPTACLES	20				29		30				20	RECEPTACLES
RECEPTACLES	20				31		32				20	FRIDGE
RECEPTACLES	20				33		34				20	MICROWAVE (*)
WATER COOLER	15				35		36				20	DISHWASHER
RANGE	50				37		38				15	RECEPTACLES (*)
	2P				39		40				20	RECEPTACLES
RECEPTACLES	20				41		42				15	RECEPTACLES
EXTERNAL RECEPTACLE (*)	20				43		44				15	DOOR OPERATOR
T-SLOT CORD REEL RECEPTACLE	20				45		46				15	DOOR OPERATOR
T-SLOT CORD REEL RECEPTACLE	20				47		48				15	DOOR OPERATOR
T-SLOT CORD REEL RECEPTACLE	20				49		50				15	BUZZER
T-SLOT CORD REEL RECEPTACLE	20				51		52				15	DOOR OPERATOR
EMERGENCY RESPONSE SYSTEM	15				53		54				15	SECURITY PANEL
EMERGENCY RESPONSE SYSTEM	15				55		56				20	FIRE ALARM PANEL (**)
RANGE HOOD	20				57		58				20	RECEPTACLES
BIKE	20				59		60				20	RECEPTACLES
TREADMILL	20				61		62				20	RECEPTACLES
ELLIPTICAL	20				63		64					
PRINTER	15				65		66				15	EF-11
PRINTER	15				67		68					
CP-3	15				69		70				20	CO DETECTOR
	2P				71		72				15	AIRMATION INDUSTRIAL AIR CLEANER-1
CP-2A	15				73		74				2P	
	2P				75		76				15	AIRMATION INDUSTRIAL AIR CLEANER-2
AIRMATION INDUSTRIAL AIR CLEANER-3	15				77		78				2P	
	2P				79		80				15	TSCMM CONTROL PANEL
CO/NOX	15				81		82				25	ERV-1
SPARE	20				83		84				2P	
(*) GROUND FAULT INTERRUPTER CIRCUIT BREAKER												
(**) C/W LOCK-OFF DEVICES												

Addendum-1

Addendum-1

ELECTRICAL PANEL: 120/208V-3Ø-60HZ, 225 AMP,MAIN BREAKER 200A

NEW PANELBOARD B SCHEDULE

DESCRIPTION	BRKR SIZE (A)	A	B	C	CR NO	BUS ABC	CR NO	A	B	C	BRKR SIZE (A)	DESCRIPTION
					01		02				20	CU-1
EDH-1 @ FCU-1	20				03		04				2P	
					05		06				15	CP-1
FCU-2, FCU-4, FCU-5	15				07		08				15	FCU-6, FCU-7, FCU-8
	2P				09		10				15	
FCU-1, FCU-3	15				11		12				15	FCU-9, FCU-11
	2P				13		14				15	
FCU-12	15				15		16				15	EF-1, EF-2
	2P				17		18				15	EF-3, EF-4
					19		20				15	EF-5, EF-6
FOLDING DOOR MOTOR	20				21		22				20	EF-7, EF-8, EF-9
					23		24					
					25		26				15	EDH-2 @ FCU-2
FOLDING DOOR MOTOR	20				27		28					
					29		30					
					31		32				15	EDH-2 @ FCU-9
FOLDING DOOR MOTOR	20				33		34					
					35		36				20	WASTE COLLECTION OVERHEAD DOOR & LIGHTING
					37		38				15	EF-12, EF-13
FOLDING DOOR MOTOR	20				39		40				15	EF-14,EF-15
					41		42				15	SPARE
					43		44				20	SU-1
EDH-2 @ FCU-12	15				45		46				2P	
					47		48					
					49		50				15	EDH-3 @ FCU-5
EDH-3 @ FCU-3	15				51		52					
					53		54					
					55		56				15	EDH-3 @ FCU-6
EDH-3 @ FCU-4	15				57		58					
					59		60					
					61		62				15	EDH-3 @ FCU-11
EDH-3 @ FCU-7	15				63		64					
					65		66				15	UH-1,UH-1A,UH-2,UH-2A, UH-7
					67		68				15	UH-3, UH-4, UH-5, UH-6
EDH-3 @ FCU-8	15				69		70				20	ELECTRIC HUMIDIFIER
					71		72				15	CP-4
BAY CEILING FAN	20				73		74				15	P-1&P-2
CP-2B	15				75		76				2P	
	2P				77		78				50	AWHP-1
DOOR O/C SIGNAL LIGHTING	15				79		80				2P	
DOOR O/C SIGNAL LIGHTING	15				81		82				15	CABINET HEATER
FLOW METER	15				83		84				2P	
(*) GROUND FAULT INTERRUPTER CIRCUIT BREAKER												
(**) C/W LOCK-OFF DEVICES												

ELECTRICAL PANEL: 120/208V-3Ø-60HZ, 60 AMP,MAIN BREAKER 30A

NEW PANELBOARD C SCHEDULE

DESCRIPTION	BRKR SIZE (A)	A	B	C	CR NO	BUS ABC	CR NO	A	B	C	BRKR SIZE (A)	DESCRIPTION
IT RACK	20				01		02				20	RADIO SYSTEM
IT EQUIPMENT	20				03		04				20	PA SYSTEM
RECEPTACLES	20				05		06				20	FIRE ALARM MONITORING PANEL (**)
RECEPTACLES	20				07		08				20	RECEPTACLES
RECEPTACLES	20				09		10				20	RECEPTACLES
RECEPTACLES	20				11		12				20	RECEPTACLES
RECEPTACLES	20				13		14				20	RECEPTACLES
RECEPTACLES	20				15		16				20	RECEPTACLES
RECEPTACLES	20				17		18				20	RECEPTACLES
RECEPTACLES	20				19		20				2P	RECEPTACLES
RECEPTACLES	20				21		22				20	RECEPTACLES
RECEPTACLES	20				23		24				20	RECEPTACLES
RECEPTACLES	20				25		26				20	RECEPTACLES
RECEPTACLES	20				27		28				20	RECEPTACLES
RECEPTACLES	20				29		30				20	RECEPTACLES
RECEPTACLES	20				31		32				20	RECEPTACLES
(*) GROUND FAULT INTERRUPTER CIRCUIT BREAKER												
(**) C/W LOCK-OFF DEVICES												

Addendum-1

ELECTRICAL PANEL: WP 120/208V-3Ø-60HZ, 600AMP,MAIN BREAKER 500A

NEW PANELBOARD PP-S1 SCHEDULE

DESCRIPTION	BRKR SIZE (A)	A	B	C	CR NO	BUS ABC	CR NO	A	B	C	BRKR SIZE (A)	DESCRIPTION
					01		02					
INVERTER#1	50				03		04				50	INVERTER#6
					05		06					
					07		08					
INVERTER#2	50				09		10				50	INVERTER#7
					11		12					
					13		14					
INVERTER#3	50				15		16				50	INVERTER#8
					17		18					
					19		20					
INVERTER#4	50				21		22				50	INVERTER#9
					23		24					
					25		26					
INVERTER#5	50				27		28				50	INVERTER#10
					29		30					
SPARE	15				31		32				20	SPARE
(*) GROUND FAULT INTERRUPTER CIRCUIT BREAKER												
(**) C/W LOCK-OFF DEVICES												

UPS BY SCHNEIDER ELECTRIC OR ANY APPROVED EQUIVALENT

PRODUCT	DESCRIPTION
GVSUPS10KFS	GALAXY VS UPS 10kW 208V FOR EXTERNAL BATTERIES, START-UP 5x8
GVSBPSU60G-1P	GALAXY VS MAINTENANCE BYPASS PANEL, SINGLE UNIT, 10-30KW 208V,20-60kW 480V WALLMOUNT
GVSCBT2	GALAXY VS CLASSIC BATTERY CABINET, UL, TYPE 2

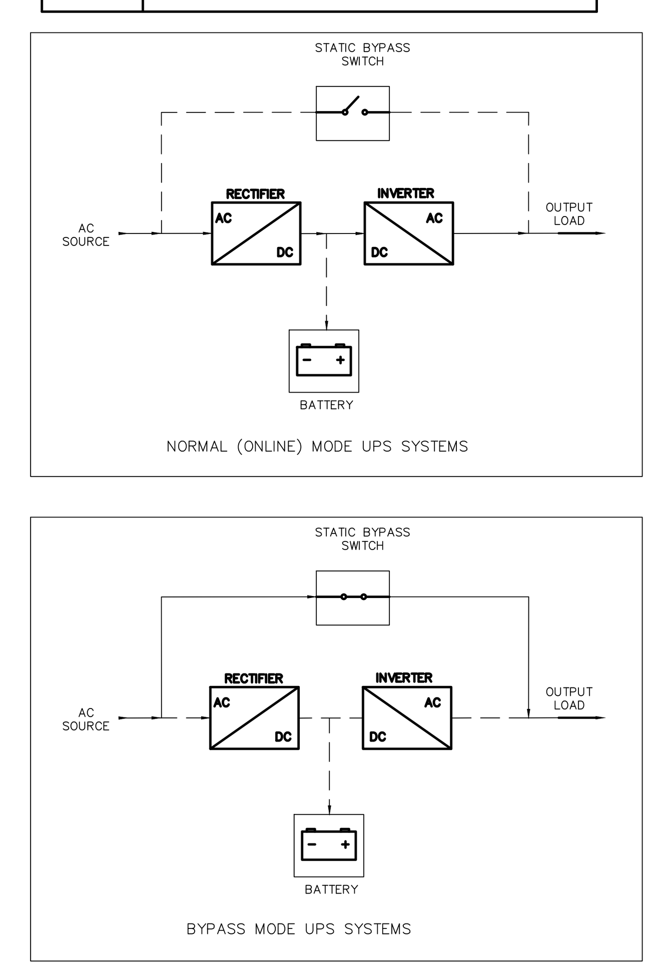

Addendum-2

NOTES:

1. REFER TO MECH. EQUIPMENT WIRING SCHEDULE FOR BREAKER/FEEDER /CONDUIT SIZES.
2. CONTRACTOR SHALL LEAVE AT LEAST 12 METERS OF THE SECONDARY CABLES AT STAKED POLE LOCATION AND SHALL SUPPLY TWO (2) RIGID PVC CONDUITS TO RUN UP THE POLE COMPLETE WITH WEATERHEAD & CLIPS FOR INNPOWER TO INSTALL ON POLE. PROVIDE ENOUGH BRICK SAND AT THE POLE TO BACKFILL AT TIME OF CONNECTION. COORDINATE WITH HYDRO FOR EXACT SCOPE OF WORK AND HYDRO INSTALLATION REQUIRMENTS/STANDARDS AND PROVIDE ALL NECESSARY MATERIAL AND LABOR TO COMPLY ACCORDINGLY.
3. PROVIDE SUITABLE CONDUIT SIZE FOR CIRCUITING WIRES WITH A MAXIMUM OF 40% CONDUIT FILL.
4. PROVIDE LOW VOLTAGE RELAY PANEL FOR EXTERIOR LIGHTING C/W STEP DOWN TRANSFORMER. RELAY PANELS SHALL BE LOCATED ADJACENT TO RELEVANT LIGHTING PANEL VERIFY LOCATIONS OF PHOTOCELLS ON SITE.
5. PROVIDE ALL NECESSARY CONDUIT, WIRING, BACKBOXES ETC. FOR LIGHTING CONTROL FOR FULLY OPERATIONAL SYSTEM.
6. ALL FEEDER CABLES SHALL BE COPPER XLPE R90 FOR DRY LOCATIONS, COPPER XLPE RW90 FOR DAM/WET LOCATIONS AND COPPER XLPE RWU90 FOR UNDERGROUND INSTALLATIONS, UNLESS NOTED OTHERWISE.
7. ALL BREAKERS OF 400A AND ABOVE SHALL HAVE ELECTRONIC TRIP UNITS.
8. CONTRACTOR SHALL PERFORM VOLTAGE DROP CALCULATIONS FOR ALL BRACH CIRCUITS AND SHALL MAINTAIN VOLTAGE DROP WITHIN PERMISSIBLE LIMITS AS PER OESC REQUIREMENTS AND PROVIDE PROPER WIRE SIZES ACCORDINGLY PRIOR TO COMMENCING OF ROUGH-IN INSTALLATION. THE VOLTAGE DROP CALCULATIONS SHALL BE BASED ON MAXIMUM CIRCUIT AMPACITY.
9. PROVIDE LOCK-ON BREAKERS FOR CIRCUITS FEEDING EXIT LIGHTINGS, EMERGENCY BATTERY UNITS, FIRE ALARM PANEL, SERVER ROOMS, PA SYSTEM, MECHANICAL CONTROLS.
10. REFER TO FLOOR PLANS FOR TYPE OF DISCONNECT SWITCHES I.I. WEATHER PROOF, NON-FUSED, FUSED ETC.
11. ALL POWER EQUIPMENT SHALL BE OF SPRINKLER PROOF DESIGN.
12. VERIFY INTERRUPTION CAPACITY OF ALL EQUIPMENT WITH CO-ORDINATION STUDY PRIOR TO MANUFACTURING OF ELECTRICAL DISTRIBUTION EQUIPMENT.
13. ALL WIRING, FEEDERS & CABLES SHALL BE COPPER.
14. BREAKER SIZE TO SUIT APPLICATION AS PER SWITCHBOARD MANUFACTURER RECOMMENDATIONS.
15. PROVED CONCRETE PAD FOR ATS & GENERATOR.

The Contractor shall verify all dimensions prior to commencement of the work.
All print and specifications are the property of the Architect and must be returned upon completion of the work.

ISSUE OR REVISION

No.	Description	Date
1	ISSUED FOR REVIEW	2023-06-22
2	ISSUED FOR REVIEW	2023-06-27
3	ISSUED FOR REVIEW	2023-07-06
4	ISSUED FOR 100% DESIGN DEVELOPMENT	2023-08-08
5	ISSUED FOR DD SIGN-OFF	2023-08-23
6	PROGRESS SET	2023-09-22
7	75% SUBMISSION	2023-10-13
8	ISSUED FOR BUILDING PERMIT	2023-11-01
9	95% SUBMISSION	2023-11-10
10	100% SUBMISSION	2023-11-24
11	100% SUBMISSION	2024-02-12
12	ISSUED FOR TENDER	2024-02-23
13	ISSUED FOR TENDER	2024-02-26
14	ISSUED FOR ADDENDUM ME-1	2024-03-12
15	ISSUED FOR ESA PLAN REVIEW	2024-03-20
16	ISSUED FOR ADDENDUM ME-2	2024-03-26

PROJECT :

BARRIE FIRE STATION 6

845 MAPLEVIEW DRIVE EAST, BARRIE, ONTARIO

PROFESSIONAL SEAL :

DWG TITLE :

SINGLE LINE DIAGRAM & PANEL SCHEDULES WITH PHOTOVOLTAIC PANELS

REGAL CONSULTING ENGINEERS INC.
CONSULTING MECHANICAL & ELECTRICAL ENGINEERS
208 Wyecroft Road, Suite 200, Oakville, Ontario L6K 3S3
PHONE: (905)844-3913
www.regal-eng.com

DATE :	JUN 14, 2023
SCALE :	NTS
DRAWN BY:	MS
CHECKED BY :	MA
DWG STATUS :	TENDER
PROJECT No. :	2023-401
DRAWING No. :	E6.1-A-2
REVISION	

NOTES:

1. REFER TO DOOR POWER DETAIL #4 on E7.0.
2. ALL DOOR OPERATORS TO INCLUDE SEQUENCING CONTROL CX12 BOARD PROVIDED BY DOOR HARDWARE SUPPLIER. SECURITY CONTRACTOR TO PROVIDE INTEGRATION OF DOOR OPERATORS.
3. UPON FIRE ALL EXTERIOR DOORS MAG SHALL BE RELEASED.

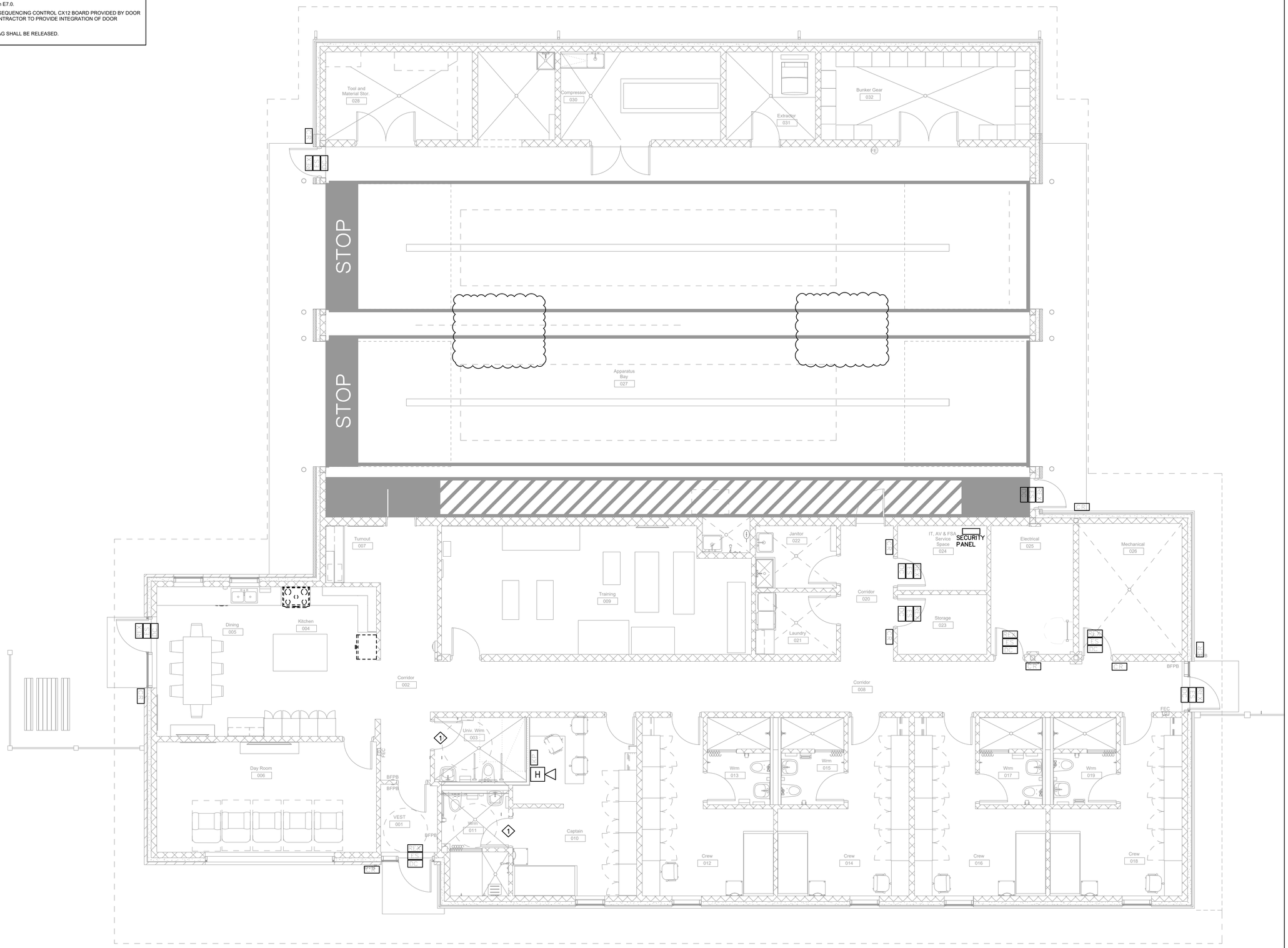

The Contractor shall verify all dimensions prior to commencement of the work.
All print and specifications are the property of the Architect and must be returned upon completion of the work.

ISSUE OR REVISION

No.	Description	Date
1	ISSUED FOR REVIEW	2023-06-22
2	ISSUED FOR REVIEW	2023-06-27
3	ISSUED FOR REVIEW	2023-07-06
4	ISSUED FOR 100% DESIGN DEVELOPMENT	2023-08-08
5	ISSUED FOR DD SIGN-OFF	2023-08-23
6	PROGRESS SET	2023-09-22
7	75% SUBMISSION	2023-10-13
8	ISSUED FOR BUILDING PERMIT	2023-11-01
9	95% SUBMISSION	2023-11-10
10	100% SUBMISSION	2023-11-24
11	100% SUBMISSION	2024-02-12
12	ISSUED FOR TENDER	2024-02-23
13	ISSUED FOR TENDER	2024-02-26
14	ISSUED FOR ADDENDUM ME-1	2024-03-12
15	ISSUED FOR ESA PLAN REVIEW	2024-03-20
16	ISSUED FOR ADDENDUM ME-2	2024-03-26

PROJECT :

BARRIE FIRE STATION 6

845 MAPLEVIEW DRIVE EAST, BARRIE, ONTARIO

PROFESSIONAL SEAL :

DWG TITLE :

PROPOSED SECURITY FLOOR PLAN

REGAL CONSULTING ENGINEERS INC.
CONSULTING MECHANICAL & ELECTRICAL ENGINEERS
208 Wycroft Road, Suite 200, Oakville, Ontario L6K 3S3
PHONE: (905)844-3913
www.regal-eng.com

DATE :	JUN 14, 2023
SCALE :	1:60
DRAWN BY:	AS
CHECKED BY :	MA
DWG STATUS :	TENDER
PROJECT No. :	2023-401
DRAWING No. :	E9.0 -A-1
REVISION	

REGAL CONSULTING ENGINEERS INC.

208 Wyecroft Road, Suite 200, Oakville, ON L6K 3S3

FULLY ADDRESSABLE FIRE ALARM SYSTEM SEQUENCES OF OPERATION FOR FIRE STATION # 6, CITY OF BARRIE

Addressable fire alarm devices and control panel are distinguished by their ability to identify each active fire alarm field device. The addressable fire alarm system meets the requirements for the electrical supervision of field devices and it provides the means of identifying the point in a building where an alarm has been initially activated.

Addressable fire alarm system designed for The Fire Station # 6 (City of Barrie) is a single stage fire alarm system. A single stage fire alarm system shall upon the operation of any manual pull station or fire smoke detector, cause any alarm signal to sound all audible signal devices in the system.

All the fire alarm devices of the fully addressable fire alarm system are connected to the fire alarm panel through the initiating circuits or SLC, which stands for signaling line circuits. On the other side of the fire alarm panel are the output circuits for a building alarm and evacuation.

Horn/Strobe devices are connected on the output circuits which is labelled NAC. That's stands for National Appliance Circuit.

When there is an input from smoke / heat detector / smoke alarm or any fire alarm initiating device. It sends a signal to the fire alarm panel, the panel will go into a fire alarm condition and will sound all audible signal devices in the system for the evacuation of the building.

Smoke Alarms wired in series shown in the crew area comes with a smoke alarm relay module (Kidde SM120X). This relay is connected to the fire alarm panel and will activate when it receives a smoke signal from an interconnect smoke alarm.

LICENSED PROFESSIONAL ENGINEER
M.K. AHMED
100069234
26/03/24
PROVINCE OF ONTARIO