SYMBOL	DESCRIPTION	SYMBOL	DESCRIPTION
	ACCESS CONTROL		
ACP	ACCESS CONTROL SYSTEM PANEL	KS	KEY SWITCH
ACSS	ACCESS CONTROL SYSTEM SERVER	LBM	LATCH BOLT MONITOR
ADO	AUTOMATIC DOOR OPERATOR	LRX	LATCH BOLT MONITOR REQUEST TO EXIT
BR	BIOMETRIC READER	MKR	MAGLOCK KEY RESET SWITCH
CR	CARD READER	MHO	MAGNETIC DOOR HOLD/OPEN DEVICE
CMS	CENTRAL MANAGEMENT STATION	ML	MAGNETIC LOCK
DA	DOOR ALARM	MRX	MOTION REQUEST TO EXIT
DC	DOOR CONTACT	PSCU	POWER SUPPLY CONTROL UNIT
EHO	ELECTRIC DOOR HOLD/OPEN DEVICE		PUSH BUTTON DOOR OPERATOR
ELR	ELECTRIC LATCH RETRACTION	PRX	PUSH BUTTON REQUEST TO EXIT
EML	ELECTRIC MORTISE LOCK	RR	REMOTE RELEASE
ES	ELECTRIC STRIKE	RFN	RF NODE
GTW	GATEWAY	RFR	RF RECEIVER
IDC	IP DOOR CONTROLLER	XX	SECURITY DOOR TAG. XX DENOTES TYPE
KEN	KEY ENCODER	WL	WIRELESS LOCK
	REAL TIME LOCATING SYSTEM (RTLS)		
LFE	LOW FREQUENCY EXCITER	RFM	RF READER MASTER
IRR	INFRARED READER	RFR	RF READER
RDU	REMOTE DISPLAY UNIT	RFE	RF ETHERNET READER
LAR	LOCAL AREA RECEIVER	RFL	RF LONG RANGE READER
	FIXED CAMERA		

NOTE: NOT ALL SYMBOLS APPLY, REFER TO FLOOR PLANS AND DRAWINGS

8 / TE-0.1 SECURITY LEGEND

SYMBOL	DESCRIPTION	SYMBOL	DESCRIPTION
	WALL MOUNTED DUPLEX RECEPTACLE 120 VOLT, 15 AMP, CSA 5-15R		WALL MOUNTED COMBINATION COMMS./ QUADPLEX RECEPTACLE 120 VOLT, 15 AMP, CSA 5-15R. REFER TO DETAIL.
	WALL MOUNTED ABOVE COUNTER DUPLEX RECEPTACLE 120 VOLT, 15 AMP, CSA 5-15R		FLOOR OR CEILING MOUNTED (AS SHOWN) COMBINATION COMMUNICATION / QUADPLEX RECEPTACLE 120 VOLT, 15 AMP, CSA 5-15R. REFER TO CORRESPONDING DETAIL.
	WALL MOUNTED DUPLEX RECEPTACLE 120 VOLT, 20 AMP, CSA 5-20R (T-SLOT)		FLOOR POKE THROUGH COMBINATION COMMUNICATION / QUADPLEX RECEPTACLE 120 VOLT, 15 AMP, CSA 5-15R. REFER TO CORRESPONDING DETAIL.
	WALL MOUNTED ABOVE COUNTER DUPLEX RECEPTACLE 120 VOLT, 20 AMP, CSA 5-20R (T-SLOT)		FLOOR POKE THROUGH AS ABOVE WITH AUDIO/VISUAL REQUIREMENT. REFER TO DETAIL.
	WALL MOUNTED DUPLEX RECEPTACLE 120 VOLT, 15 AMP, CSA 5-15R, DEDICATED CIRCUIT		WALL MOUNTED COMBINATION COMMS./ DUPLEX RECEPTACLE 120 VOLT, 15 AMP, CSA 5-15R. REFER TO DETAIL.
	WALL MOUNTED DUPLEX RECEPTACLE 120 VOLT, 20 AMP, CSA 5-20R, DEDICATED CIRCUIT		FLOOR OR CEILING MOUNTED (AS SHOWN) COMBINATION COMMUNICATION / DUPLEX RECEPTACLE 120 VOLT, 15 AMP, CSA. 5-15R. REFER TO CORRESPONDING DETAIL.
	WALL MOUNTED, SPLIT SWITCH CONTROLLED DUPLEX RECEPTACLE 120 VOLT, 15 AMP, CSA 5-15R		FLOOR POKE THROUGH COMBINATION COMMUNICATION / DUPLEX RECEPTACLE 120 VOLT, 15 AMP, CSA 5-15R. REFER TO CORRESPONDING DETAIL.
	WALL MOUNTED DUPLEX GROUND FAULT RECEPTACLE 120 VOLT, 15 AMP, CSA 5-15R		FLOOR POKE THROUGH AS ABOVE WITH AUDIO/VISUAL REQUIREMENT. REFER TO DETAIL.
	WALL MOUNTED ABOVE COUNTER DUPLEX GROUND FAULT RECEPTACLE 120 VOLT, 15 AMP, CSA 5-15R		WALL MOUNTED DUPLEX RECEPTACLE 120 VOLT, 15 AMP, CSA 5-15R
	WALL MOUNTED DUPLEX GROUND FAULT RECEPTACLE 120 VOLT, 20 AMP CSA 5-20R		WALL MOUNTED DUPLEX RECEPTACLE 120 VOLT, 15 AMP, CSA 5-15R
	WALL MOUNTED ABOVE COUNTER DUPLEX GROUND FAULT RECEPTACLE 120 VOLT, 20 AMP CSA 5-20R		WALL MOUNTED DUPLEX RECEPTACLE 120 VOLT, 15 AMP, CSA 5-15R
	WALL MOUNTED QUADPLEX RECEPTACLE 120 VOLT, 15 AMP, CSA 5-15R		WALL MOUNTED DUPLEX RECEPTACLE 120 VOLT, 15 AMP, CSA 5-15R
	WALL MOUNTED DUPLEX RECEPTACLE 120 VOLT, 15 AMP, 2 POLE, SPLIT CIRCUIT		WALL MOUNTED DUPLEX RECEPTACLE 120 VOLT, 15 AMP, CSA 5-15R
	WALL MOUNTED ABOVE COUNTER DUPLEX RECEPTACLE 120 VOLT, 15 AMP, 2 POLE, SPLIT CIRCUIT		FLOOR MOUNTED QUADPLEX RECEPTACLE 120 VOLT, 15 AMP, CSA 5-15R
	WALL MOUNTED SIMPLEX RECEPTACLE 250 VOLT. REFER TO APPLIANCE SCHEDULE.		RACEWAY RECEPTACLE, TYPE AS SPECIFIED C/W QUANTITY OF DEVICES INDICATED
	SPECIAL RECEPTACLE. TYPE AND DETAILS AS NOTED ON DRAWING.		SERVICE POLE, TYPE AS SPECIFIED C/W QUANTITY OF DEVICES INDICATED
	WALL MOUNTED ABOVE COUNTER SIMPLEX RECEPTACLE 120 VOLT, 15 AMP, CSA 5-15R		
	WALL MOUNTED SIMPLEX RECEPTACLE 120 VOLT, 20 AMP, CSA 5-20R		
	WALL MOUNTED DUPLEX RECEPTACLE 120 VOLT, 30 AMP, CSA 5-30R, DEDICATED CIRCUIT		

NOTE: NOT ALL SYMBOLS APPLY, REFER TO FLOOR PLANS AND DRAWINGS

6 / TE-0.1 POWER LEGEND 1 OF 2

SYMBOL	DESCRIPTION	SYMBOL	DESCRIPTION
	CEILING MOUNTED LINEAR LUMINAIRE. DIMENSIONS AS SHOWN. REFER TO SCHEDULE FOR TYPE.		CEILING MOUNTED WALL WASHER LUMINAIRE. ILLUMINATION DIRECTION DENOTED BY HATCHED SIDE.
	DENOTES FIXTURE ON EMERGENCY LIGHT CIRCUIT.		CEILING MOUNTED TRACK LIGHTING C/W NUMBER OF FIXTURES.
	WALL MOUNTED LINEAR LUMINAIRE. DIMENSIONS AS SHOWN. REFER TO SCHEDULE FOR TYPE.		WALL MOUNTED LUMINAIRE
	CEILING MTD. LUMINAIRE OR BASKET LUMINAIRE. LAMP ORIENTATION AS SHOWN. REFER TO SCHEDULE FOR TYPE.		PENDANT FIXTURE
	EXISTING LUMINAIRE TO BE REMOVED		CEILING MOUNTED LUMINAIRE
	EXISTING LUMINAIRE TO REMAIN		FLOOR MOUNTED LUMINAIRE
	POLE MOUNTED LUMINAIRE. NUMBER OF HEADS SHOWN. REFER TO SCHEDULE FOR FIXTURE AND POLE TYPE.		TRACK LIGHT WITH PENDANT LUMINAIRE AS INDICATED
	CEILING MOUNTED LUMINAIRE WITH GIMBALLED HEADS. REFER TO SCHEDULE FOR TYPE AND NUMBER OF HEADS.		BOLLARD LUMINAIRE
	VERTICAL WALL MOUNTED FLUORESCENT LUMINAIRE		
	CONTINUOUS STRIP LIGHT. REFER TO SCHEDULE FOR FIXTURE TYPE.		
	STAGGERED COVE LIGHT. DIMENSIONS AND NUMBER OF FIXTURES SHOWN. REFER TO SCHEDULE FOR FIXTURE TYPE.		
	RECESSED CEILING MOUNTED REMOTE ADJUSTABLE LUMINAIRE CONNECTED TO EMERGENCY LIGHTING BATTERY UNIT.	B	EMERGENCY LIGHTING BATTERY UNIT C/W NUMBER OF HEADS SHOWN
	WALL MOUNTED EMERGENCY SINGLE REMOTE HEAD	B	EMERGENCY LIGHTING BATTERY UNIT
	WALL MOUNTED EMERGENCY DOUBLE REMOTE HEAD	B	EMERGENCY LIGHTING BATTERY + EXIT LIGHT COMBINATION UNIT C/W NUMBER OF HEADS SHOWN
	CEILING MOUNTED EMERGENCY SINGLE REMOTE HEAD		EXIT LIGHT CEILING MOUNTED C/W FACES AND ARROWS AS INDICATED
	CEILING MOUNTED EMERGENCY DOUBLE REMOTE HEAD		EXIT LIGHT WALL MOUNTED C/W FACES AND ARROWS AS INDICATED

NOTE: NOT ALL SYMBOLS APPLY, REFER TO FLOOR PLANS AND DRAWINGS

4 / TE-0.1 LIGHTING LEGEND 1 OF 2

ELECTRICAL DRAWING LIST

DRAWING No.	DRAWING NAME
TE-0.1	DRAWING LIST AND LEGEND
TE-0.2	ELECTRICAL DETAILS
TE-0.3	ELECTRICAL DETAILS
TE-0.4	SINGLE LINE DIAGRAM
TE-2.0	PHASE I – LEVEL 2 KEY PLAN
TE-2.1	PHASE I – LEVEL 2 LIGHTING AND FIRE ALARM LAYOUT
TE-2.2	PHASE I – LEVEL 2 POWER AND SYSTEMS LAYOUT
TE-2.3	PHASE I – LEVEL 2 LIGHTING AND FIRE ALARM DEMOLITION LAYOUT
TE-2.4	PHASE I – LEVEL 2 POWER AND SYSTEMS DEMOLITION LAYOUT
TE-3.1	PHASE I – LEVEL 3 LIGHTING AND FIRE ALARM LAYOUT
TE-3.2	PHASE I – LEVEL 3 POWER AND SYSTEMS LAYOUT
TE-3.3	PHASE I – LEVEL 3 LIGHTING AND FIRE ALARM DEMOLITION LAYOUT
TE-3.4	PHASE I – LEVEL 3 POWER AND SYSTEMS DEMOLITION LAYOUT

1 / TE-0.1 ELECTRICAL DRAWING LIST

SYMBOL	DESCRIPTION	SYMBOL	DESCRIPTION
	SIGNALING DEVICES		
	HORN		DUCT TYPE PHOTO-ELECTRIC SMOKE DETECTOR
	DOUBLE SIDED HORN		CEILING MOUNTED EMERGENCY EVACUATION SPEAKER
	HORN+STROBE COMBINATION. STROBE INTENSITY TO BE MIN. 15CD UNLESS OTHERWISE NOTED.		WALL MOUNTED EMERGENCY EVACUATION SPEAKER
	DOUBLE SIDED HORN+STROBE COMBINATION. STROBE INTENSITY TO BE MIN. 15CD UNLESS OTHERWISE NOTED.		CEILING MOUNTED EMERGENCY EVACUATION SPEAKER + STROBE COMBINATION. STROBE INTENSITY TO BE MIN. 15CD UNLESS OTHERWISE NOTED.
	MINI HORN		
	SPEAKER HORN		WALL MOUNTED EMERGENCY EVACUATION SPEAKER + STROBE COMBINATION. STROBE INTENSITY TO BE MIN. 15CD UNLESS OTHERWISE NOTED.
	FIRE ALARM BELL. 103mm(4") UNLESS OTHERWISE NOTED.		
	FIRE ALARM BELL/STROBE. 103mm(4") BELL UNLESS OTHERWISE NOTED. 15CD INTENSITY UNLESS OTHERWISE NOTED.		CEILING MOUNTED FIRE ALARM STROBE. STROBE INTENSITY TO BE MIN. 15CD UNLESS OTHERWISE NOTED.
	CEILING MOUNTED PHOTO-ELECTRIC SMOKE DETECTOR		WALL MOUNTED FIRE ALARM STROBE. STROBE INTENSITY TO BE MIN. 15CD UNLESS OTHERWISE NOTED.
SA	LOCAL 120V SMOKE ALARM	SS	10 MINUTES SILENCE SWITCH FOR SPEAKERS IN SUITES
CO/SA	LOCAL 120V COMBINATION CARBON MONOXIDE AND SMOKE ALARM		FIRE ALARM PANEL. CONTROL, DGP OR ANNUNCIATOR AS NOTED.
CO	LOCAL 120V CARBON MONOXIDE DETECTOR		MANUAL PULL STATION
SA	LOCAL 120V COMBINATION STROBE AND SMOKE ALARM	S	PUBLIC ADDRESS SYSTEM

NOTE: NOT ALL SYMBOLS APPLY, REFER TO FLOOR PLANS AND DRAWINGS

2 / TE-0.1 FIRE ALARM LEGEND

SYMBOL	DESCRIPTION	SYMBOL	DESCRIPTION
	WALL MOUNTED VOICE OUTLET(S). ROUGH-IN BY ELECTRICAL CONTRACTOR	EPS	WALL MOUNTED VOICE OUTLET FOR EMERGENCY PHONE STATION. ROUGH-IN BY ELECTRICAL CONTRACTOR
	WALL MOUNTED DATA OUTLET(S). ROUGH-IN BY ELECTRICAL CONTRACTOR	IC	COMMUNICATIONS INTERCOM ROUGH-IN BY ELECTRICAL CONTRACTOR
	FLOOR MOUNTED VOICE AND DATA OUTLET(S). ROUGH-IN BY ELECTRICAL CONTRACTOR		RACEWAY MOUNTED VOICE AND DATA OUTLET(S). ROUGH-IN BY ELECTRICAL CONTRACTOR
	FLOOR MOUNTED VOICE OUTLET(S). ROUGH-IN BY ELECTRICAL CONTRACTOR		WALL MOUNTED COAXIAL CATV OUTLET ROUGH-IN BY ELECTRICAL CONTRACTOR
	FLOOR MOUNTED DATA OUTLET(S). ROUGH-IN BY ELECTRICAL CONTRACTOR		SERVICE POLE MOUNTED VOICE AND DATA OUTLET(S). ROUGH-IN BY ELECTRICAL CONTRACTOR
	FURNITURE MOUNTED VOICE AND DATA OUTLET(S). ROUGH-IN BY ELECTRICAL CONTRACTOR		ONE BACKBOX C/W MINIMUM 1-1/2" CONDUIT OR AS SPECIFIED ON DETAILS, STUBBED INTO CEILING SPACE OR TO AUDIO VISUAL DEVICE C/W TWO CONNECTORS WITH NYLON BUSHINGS AND PULL STRINGS FOR USE BY AUDIO VISUAL CONTRACTOR. REFER TO AUDIO VISUAL DRAWINGS FOR COMPLETE REQUIREMENTS INCLUDING BACKBOX SIZE/TYPE, EXACT CONDUIT SIZE, ROUTING AND TERMINATION POINTS, ETC.
	FURNITURE MOUNTED VOICE OUTLET(S). ROUGH-IN BY ELECTRICAL CONTRACTOR		
	FURNITURE MOUNTED DATA OUTLET(S). ROUGH-IN BY ELECTRICAL CONTRACTOR		
	CEILING MOUNTED VOICE AND DATA OUTLET(S). ROUGH-IN BY ELECTRICAL CONTRACTOR		
	CEILING MOUNTED DATA OUTLET(S). C/W 1" EMT CONDUIT TO EXISTING DATA RACK. CONFIRM THE EXACT LOCATION ON SITE ALLOW FOR ALL COST. ROUGH-IN BY ELECTRICAL CONTRACTOR		ONE BACKBOX C/W ONE MINIMUM 1-1/4" CONDUIT OR AS SPECIFIED ON DETAILS, STUBBED INTO CEILING SPACE C/W TWO CONNECTORS WITH NYLON BUSHINGS AND PULL STRINGS FOR USE BY COMMUNICATIONS CONTRACTOR. ONE CONDUIT PER BOX.

NOTE: NOT ALL SYMBOLS APPLY, REFER TO FLOOR PLANS AND DRAWINGS

9 / TE-0.1 DATA AND COMMUNICATION

SYMBOL	DESCRIPTION	SYMBOL	DESCRIPTION
	ISOLATION TRANSFORMER – DELTA-WYE UNLESS OTHERWISE NOTED.	GF	GROUND FAULT ALARM RELAY
	ISOLATION TRANSFORMER WITH ELECTROSTATIC SHIELD – DELTA-WYE UNLESS OTHERWISE NOTED.	MD	IP BASED POWER QUALITY DIGITAL METER. PROVIDE 21mm(3/4") CONDUIT TO NEAREST TELECOM ROOM.
	MOLDED CASE CIRCUIT BREAKER, SIZE AS SHOWN		EMERGENCY GENERATOR
	LOW VOLTAGE, DRAW-OUT CIRCUIT BREAKER, TRIP PLUG AND FRAME SIZE AS SHOWN		GROUND CONNECTION POINT
	DRAW-OUT VACUUM CIRCUIT BREAKER, PROTECTIVE RELAY FUNCTIONS AND FRAME SIZE AS SHOWN.	CP	ELECTRONIC TRIP SETTING CONTROL (GROUND FAULT)
	FUSIBLE LOAD BREAK ISOLATION SWITCH. VOLTAGE, FUSE AND FRAME SIZE AS SHOWN.		GROUND LOOP
	FUSE	HRG	HIGH RESISTANCE GROUND FAULT SYSTEM
	INSULATED CASE CIRCUIT BREAKER		LIGHTNING SURGE ARRESTOR
	INTEGRAL BREAKER AND STARTER UNIT, BREAKER AND FRAME SIZE AS SHOWN		METERING SOCKET
	INTEGRAL SWITCH AND FUSE UNIT, FUSE AND FRAME SIZE AS SHOWN		METERING CABINET
	LOAD BREAK ISOLATION SWITCH. VOLTAGE AND FRAME SIZE AS SHOWN.	DM	DIGITAL ELECTRONIC METER
	AUTO-TRANSFORMER	SPD	SURGE PROTECTION DEVICE

NOTE: NOT ALL SYMBOLS APPLY, REFER TO FLOOR PLANS AND DRAWINGS

10 / TE-0.1 SINGLE LINE LEGEND

SYMBOL	DESCRIPTION	SYMBOL	DESCRIPTION
	FLUSH MOUNTED SINGLE TUB PANEL. RATING AS NOTED ON SINGLE LINE/PANEL SCHEDULE.		CONTACTOR
	FLUSH MOUNTED DOUBLE TUB PANEL RATING AS NOTED ON SINGLE LINE/PANEL SCHEDULE.		GROUND ROD WITH INSPECTION PIT
	SURFACE MOUNTED SINGLE TUB PANEL. RATING AS NOTED ON SINGLE LINE/PANEL SCHEDULE		THERMOSTAT-16mm (1/2") CONDUIT TO ACCESSIBLE CEILING SPACE
	SURFACE MOUNTED DOUBLE TUB PANEL. RATING AS NOTED ON SINGLE LINE/PANEL SCHEDULE.	JB	JUNCTION BOX (SIZE SPECIFIED ON DRAWING)
	TRANSFORMER (SIZE NOTED ON SINGLE LINE DIAGRAM)		ELECTRIC UNIT HEATER
	DISCONNECT	X	ELECTRIC BASEBOARD HEATER. 'X' DENOTES TYPE. REFER TO BASEBOARD HEATER SCHEDULE.
	COMBINATION MANUAL STARTER WITH INTEGRAL DISCONNECT		GROUND BAR
	COMBINATION STARTER WITH INTEGRAL DISCONNECT	HD	HAND DRYER HARD WIRED CONNECTION
	DIRECT CONNECTION	M	METER
	DIRECT CONNECTION C/W DISCONNECT	R	RELAY
	MOTOR C/W DISCONNECT	PB	PULL BOX
	MOTOR C/W RELAY DISCONNECT DISCONNECT		GROUND BUS
	MOTOR C/W COMBINATION STARTER WITH INTEGRAL DISCONNECT		DENOTES RECEPTACLE TYPE. REFER TO RECEPTACLE SCHEDULE.
HF VFD	VARIABLE FREQUENCY DRIVE AND VFD CABLE CONNECTION TO MOTOR. LINE AND LOAD SIDE WIRING OF HARMONIC FILTER AND VFD BY ELECTRICAL CONTRACTOR. MOTOR, VFD AND HARMONIC FILTER SUPPLIED BY MECHANICAL DIVISION.		UTILITY METERING CABINET
			DOOR BELL/CHIME
			CLOCK WALL MOUNTED
VFD	VARIABLE FREQUENCY DRIVE, LINE AND LOAD SIDE WIRING OF HARMONIC FILTER AND VFD BY ELECTRICAL CONTRACTOR, LOAD SIDE WIRING OF VFD TO BE VFD CABLE. VFD AND HARMONIC FILTER SUPPLIED BY MECHANICAL DIVISION.		CLOCK CEILING MOUNTED
			PUSH BUTTON
			MOTOR
HF	HARMONIC FILTER (SUPPLIED BY MECH. CONTRACTOR UNLESS NOTED OTHERWISE.) LINE AND LOAD SIDE WIRING OF HARMONIC FILTER BY ELECTRICAL CONTRACTOR.		

NOTE: NOT ALL SYMBOLS APPLY, REFER TO FLOOR PLANS AND DRAWINGS

7 / TE-0.1 POWER LEGEND 2 OF 2

SYMBOL	DESCRIPTION	SYMBOL	DESCRIPTION
$	SINGLE POLE LINE VOLTAGE LIGHT SWITCH		
$	2 GANG – LINE VOLTAGE LIGHT SWITCH		
$	3 GANG – LINE VOLTAGE LIGHT SWITCH		
$3	3 WAY – LINE VOLTAGE LIGHT SWITCH		
$4	4 WAY – LINE VOLTAGE LIGHT SWITCH		
$LV	LOW VOLTAGE LIGHT SWITCH		
$K	KEY OPERATED LINE VOLTAGE SWITCH		
$MS	MASTER SWITCH		
$AO	ALL-OFF SWITCH		
$	SINGLE POLE 347V SWITCH		
D	DIMMER TYPE TO SUIT LOAD		
PC	CEILING MOUNTED PHOTO CELL SWITCH		
PC	WALL MOUNTED PHOTO CELL SWITCH		
DL	DAY LIGHT PHOTO SENSOR		
	TIME SWITCH		
OS 'X'	CEILING MOUNTED OCCUPANCY SENSOR. TYPE DENOTED BY 'X'. REFER TO OCCUPANCY SENSOR SCHEDULE.		
OS 'X'	WALL MOUNTED OCCUPANCY SENSOR. TYPE DENOTED BY 'X'. REFER TO OCCUPANCY SENSOR SCHEDULE.		
LC	LIGHTING CONTROL MODULE		
DIM	MULTI-ZONE LIGHTING CONTROL PANEL		
RS	REMOTE STATION WITH PRESET SCENE SELECTION BUTTON		
IR	PARTITION POSITION INFRARED SENSOR FOR LIGHTING CONTROL		

NOTE: NOT ALL SYMBOLS APPLY, REFER TO FLOOR PLANS AND DRAWINGS

5 / TE-0.1 LIGHTING LEGEND 2 OF 2

SYMBOL	DESCRIPTION	SYMBOL	DESCRIPTION
6 / E-01	DETAIL NUMBER / DRAWING NUMBER	12 / E-01	SECTION NUMBER / DRAWING NUMBER
4	REVISION NUMBER		REVISION BUBBLE
A	AMPS	MO	MOTOR OPERATED
AD	ACCESS DOOR	MOD	MOTOR OPERATED DAMPER
AFCI	ARC FAULT CIRCUIT INTERRUPTER	MW	MICROWAVE
AFF	ABOVE FINISHED FLOOR	N	NEW
BBH	BASEBOARD HEATER	NC	NORMALLY CLOSED
BU	BATTERY UNIT	NIC	NOT IN CONTRACT
C	CONDUIT	NL	NIGHT LIGHT
CD	CANDELA	NO	NORMALLY OPEN
CL	CEILING MOUNTED	OC	OVER COUNTER
CS	CHARGING STATION	OL	OBSTRUCTION LIGHT
CV	CONVENTIONAL STYLE DEVICE	P	PARABOLIC LOUVRE
D	DEDICATED	PL	PATIENT LIFT
DG	DEDICATED GROUND	R	RELOCATE
DHWT	DOMESTIC HOT WATER TANK	RA	RANGE
DNC	DEDICATED NEUTRAL + BOND	RC	REVISE EXISTING CIRCUIT
DR	LAUNDRY DRYER	RH	RANGE HOOD
DW	DISHWASHER	RIC	ROUGH IN AND CONNECT
E	EXISTING	RO	ROUGH IN ONLY
EF	EXHAUST FAN	RR	REMOVE AND REINSTALL
EM	EMERGENCY CIRCUIT	SC	SEPARATE CIRCUIT
EP	ELECTRICAL SUITE PANEL	SF	SYSTEM FURNITURE
ER	EXISTING TO BE REMOVED	SP	SUITE ALARM PANEL
F	REFRIGERATOR	SSP	SLAVE SUITE ALARM PANEL
FF	FLOOR FEED	TYP	TYPICAL
FFH	FORCE FLOW HEATER	UC	UNDER CABINET MOUNTED
FL	FLOOR MOUNTED	U	UPS CIRCUIT
GFCI	GROUND FAULT CIRCUIT INTERRUPTER	UH	UNIT HEATER
GFI	GROUND FAULT INTERRUPTER	UPS	UNINTERRUPTIBLE POWER SUPPLY
GND	GROUND	V	VOLTS
HK	HOUSE KEEPING	W	WATTS
HMT	HARMONIC MITIGATING TRANSFORMER	WG	WIRE GUARD
ICE	ICE MACHINE	WAP	WIRELESS ACCESS POINT
IG	ISOLATED GROUND	WF	WALL FEED
JB	JUNCTION BOX	WP	WEATHERPROOF
KW	KILOWATTS	X	EXPLOSION PROOF DEVICE + BACK BOX
LV	LOW VOLTAGE	ZSCT	ZERO SEQUENCE CURRENT TRANSFORMER

NOTE: NOT ALL SYMBOLS APPLY, REFER TO FLOOR PLANS AND DRAWINGS

3 / TE-0.1 GENERAL AND SYMBOLS AND ABBREVIATIONS

UNIVERSITY OF TORONTO SCARBOROUGH

DESIGN & CONSTRUCTION MANAGEMENT
1265 Military Trail
Toronto Ontario
M1C 1A4

NO.	DATE	REVISION NO
1	2021-06-28	ISSUED FOR 85% PERMIT REVIEW
2	2021-07-05	ISSUED FOR PERMIT
3	2021-07-21	100% TENDER CHECK SET
4	2021-08-06	ISSUED FOR TENDER

PROJECT CONTACT

NAME: Ehsan Nagahi
TEL: 647 943 7643
EMAIL: ehsan.nagahi@smithandandersen.com

THIS DRAWING SHALL BE READ IN CONJUNCTION WITH ELECTRICAL SPECIFICATION SUBMITTED FOR THIS PROJECT.

STAMP:

CONSULTANT:

Smith + Andersen
1100 – 100 Sheppard Ave. East, Toronto On, M2N 6N5
416 487 8151 F 416 487 9104 smithandandersen.com

Notes:

All dimensions and information shall be checked and verified on the site and any discrepancies must be reported to the UofT Project Manager or the UofT Project Coordinator before commencing the work. Drawings are not to be scaled.

This drawing and all aspects of its content are protected by copyright. Reproduction in whole or in part, by any means whatsoever, whether electronic, mechanical or otherwise, without the expresses written permission of the University of Toronto Scarborough, is prohibited by law.

CLIENT:
LIBRARY/ INFO & INSTRUCTIONAL TECHNOLOGY SERVICES- UNIVERSITY OF TORONTO SCARBOROUGH
TORONTO ONTARIO, M1C1A4

PROJECT #:
03118.009

PROJECT TITLE:
LIBRARY / IITS INTERIOR RENOVATION - ARC BUILDING PHASE I

LIBRARY / IITS, 1265 MILITARY TRAIL

DRAWN BY: PH
CHECKED BY: EN/NC

DRAWING TITLE:
DRAWING LIST AND LEGEND

DATE: 2021-04-20
SCALE: N.T.S.
DRAWING No: TE-0.1

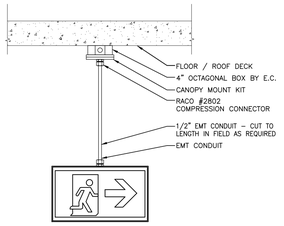

NOTES:

N-1 INSTALL PENDANT EXIT SIGNS AS PER MANUFACTURER'S RECOMMENDATIONS. ALLOW FOR ALL NECESSARY COMPONENTS.

N-2 PENDANT EXIT SIGNS SHALL BE INSTALLED IN EXPOSED CEILING AREAS. REFER TO FLOOR PLANS FOR CEILING TYPES, QUANTITIES, FACE AND CHEVRON REQUIREMENTS. TOP OF SIGN TO BE MOUNTED BELOW UNDERSIDE OF SUSPENDED LIGHT FIXTURES AND/OR CEILING. ENSURE EXIT SIGN IS VISIBLE AND CLEAR OF VISUAL OBSTRUCTIONS.

N-3 EXIT SIGN SHALL BE LUMACELL EMERGI-LITE DIE-CAST ALUMINUM PICTOGRAM EDGE LIT EXIT SIGN. EDE-W-C-U.

10 / TE-0.2 PENDANT EXIT SIGN DETAIL
N.T.S.

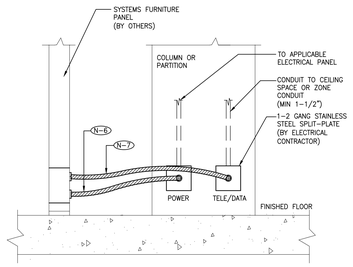

DRAWING SYMBOLS
W

NOTES:

N-1 PROVIDE CONNECTOR, C/W NYLON BUSHINGS FOR CONDUIT TERMINATIONS WITHIN ACCESSIBLE CEILING SPACE.

N-2 PROVIDE PULL STRINGS IN ALL EMPTY CONDUIT.

N-3 CO-OORDINATE EXACT REQUIREMENTS WITH FURNITURE SUPPLIER AND INSTALLER PRIOR ROUGH-IN.

N-4 MINIMUM SIZE OF POWER CONDUITS IS 3/4"(20MM).

N-5 CO-ORDINATE EXACT LOCATIONS WITH INTERIOR CONSULTANT ON SITE PRIOR TO ROUGH IN.

N-6 FURNITURE MANUFACTURER SUPPLIED WIRING HARNESS. ELECTRICAL CONTRACTOR TO TERMINATE USING 90° FLEX CONNECTOR SIZED TO MATCH HARNESS.

N-7 COMMUNICATION CONTRACTOR TO PROVIDE ALL COMMUNICATION/WIRING AND COMPONENTS.

7 / TE-0.2 FURNITURE SYSTEM CONNECTION – WALL FEED
N.T.S.

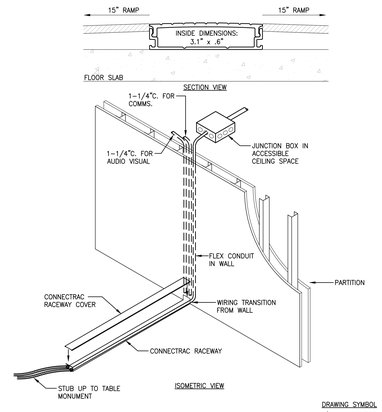

DRAWING SYMBOL
F1

NOTES:

N-1 REFER TO PLANS FOR CONNECTRAC RACEWAY LOCATIONS. BASE SYSTEM SHALL BE IN-CARPET WIREWAY PART #IN-048/096-AL.

N-2 SUPPLY AND INSTALL RACEWAYS AND POWER/COMMS. DEVICES AS INDICATED. CONSULT WITH MANUFACTURER FOR COMPLETE REQUIREMENTS AND PROVIDE ALL REQUIRED COMPONENTS AND ACCESSORIES FOR A COMPLETE AND WORKING INSTALLATION.

N-3 COORDINATE EXACT ROUTING OF RACEWAY WITH GENERAL CONTRACTOR ON SITE PRIOR TO INSTALLATION. RACEWAYS TO BE FIELD CUT AS REQUIRED. PROVIDE 45° OR 90° CORNER KITS WHERE NECESSARY.

4 / TE-0.2 STUB UP CONNECTRAC RACEWAY SYSTEM DETAIL
N.T.S.

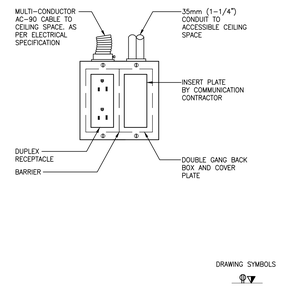

DRAWING SYMBOLS

NOTES:

N-1 PROVIDE CONNECTOR, C/W NYLON BUSHINGS FOR CONDUIT TERMINATIONS WITHIN ACCESSIBLE CEILING SPACE.

N-2 PROVIDE PULL STRINGS IN ALL EMPTY CONDUIT.

N-3 COVER PLATES BY ELECTRICAL CONTRACTOR.

1 / TE-0.2 POWER AND COMMUNICATION OUTLETS
N.T.S.

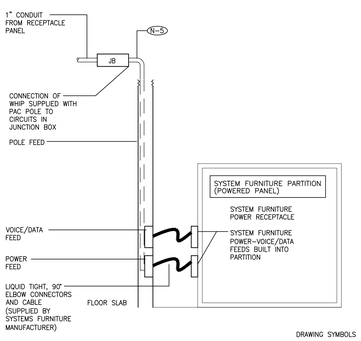

DRAWING SYMBOLS
P

NOTES:

N-1 JUNCTION BOXES TO BE MOUNTED TO UNDERSIDE OF SLAB.

N-2 COORDINATE INSTALLATION OF VOICE/DATA HARDWARE WITH CABLING CONTRACTOR PRIOR TO ROUGH IN.

N-3 MINIMUM SIZE OF POWER CONDUITS IS 3/4".

N-4 CO-ORDINATE EXACT LOCATIONS WITH INTERIOR DESIGNER PRIOR TO ROUGH-IN.

N-5 FURNITURE MANUFACTURER SUPPLIED WIRING HARNESS. ELECTRICAL CONTRACTOR TO TERMINATE USING 90° FLEX CONNECTOR SIZED TO MATCH HARNESS.

11 / TE-0.2 PAC POLE SYSTEM FURNITURE FEED
N.T.S.

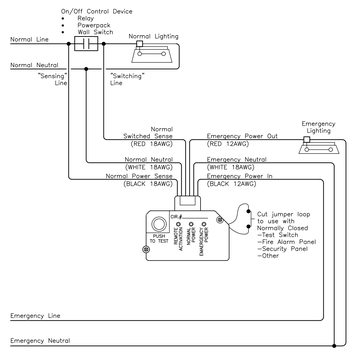

NOTES:

N-1 ELECTRICAL CONTRACTOR TO SUPPLY AND INSTALL UL924 LISTED EMERGENCY LIGHTING CONTROL UNIT (ELCU) TO BE MODEL WATTSTOPPER ELCU-200 OR APPROVED EQUAL. UPON LOSS OF NORMAL POWER UNIT SHALL TURN ON LIGHT FIXTURES ON EMERGENCY CIRCUIT TO FULL BRIGHTNESS.

N-2 TEST SWITCHES ON FACE OF INDIVIDUAL ELCU UNITS OPERATE ONLY INDIVIDUAL UNITS. REMOTE INPUTS (FIRE ALARM, TEST, ETC.) WHERE IDENTIFIED ON THE DRAWINGS ARE TO OPERATE ALL ELCU UNITS WIRED IN PARALLEL.

N-3 PROVIDE MAIN FIRE ALARM TIE-IN CONNECTION TO REMOTE INPUT. UPON ACTIVATION OF FIRE ALARM, SWITCHES/OCCUPANCY SENSORS TO BE BYPASSED AND ALL EMERGENCY LIGHTING TO TURN ON FULL BRIGHT.

N-4 REFER TO PLANS FOR QUANTITIES AND LOCATIONS OF EMERGENCY LIGHTING FIXTURES TO HAVE ON/OFF CONTROL. CONTRACTOR IS RESPONSIBLE FOR DETERMINING EXACT WIRING REQUIREMENTS WITH MANUFACTURER.

8 / TE-0.2 EMERGENCY SHUNT UNIT FOR EMERGENCY LIGHT FIXTURES
N.T.S.

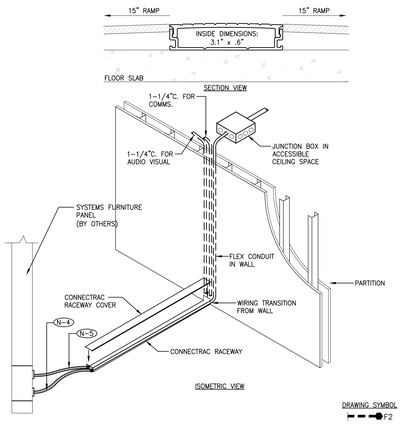

DRAWING SYMBOL
F2

NOTES:

N-1 REFER TO PLANS FOR CONNECTRAC RACEWAY LOCATIONS. BASE SYSTEM SHALL BE IN-CARPET WIREWAY PART #IN-048/096-AL.

N-2 SUPPLY AND INSTALL RACEWAYS AND POWER/COMMS. DEVICES AS INDICATED. CONSULT WITH MANUFACTURER FOR COMPLETE REQUIREMENTS AND PROVIDE ALL REQUIRED COMPONENTS AND ACCESSORIES FOR A COMPLETE AND WORKING INSTALLATION.

N-3 COORDINATE EXACT ROUTING OF RACEWAY WITH GENERAL CONTRACTOR ON SITE PRIOR TO INSTALLATION. RACEWAYS TO BE FIELD CUT AS REQUIRED. PROVIDE 45° OR 90° CORNER KITS WHERE NECESSARY.

N-4 FURNITURE MANUFACTURER SUPPLIED WIRING HARNESS. ELECTRICAL CONTRACTOR TO TERMINATE USING 90° FLEX CONNECTOR SIZED TO MATCH HARNESS.

N-5 COMMUNICATION CONTRACTOR TO PROVIDE ALL COMMUNICATION/WIRING AND COMPONENTS.

5 / TE-0.2 UNDER CARPET CONNECTRAC RACEWAY SYSTEM FURNITURE
N.T.S.

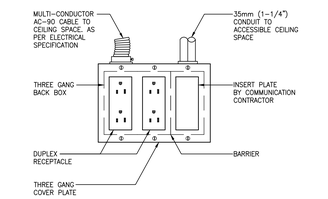

DRAWING SYMBOLS

NOTES:

N-1 PROVIDE CONNECTOR, C/W NYLON BUSHINGS FOR CONDUIT TERMINATIONS WITHIN ACCESSIBLE CEILING SPACE.

N-2 PROVIDE PULL STRINGS IN ALL EMPTY CONDUIT.

N-3 COVER PLATES BY ELECTRICAL CONTRACTOR.

2 / TE-0.2 POWER AND COMMUNICATION OUTLETS
N.T.S.

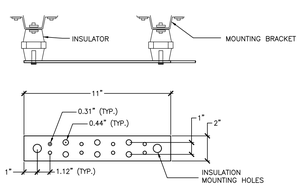

SIZE OF TELECOMMUNICATIONS BONDING BACKBONE WIRE BETWEEN THE GROUNDING BUSBAR AND THE ELECTRICAL PANEL IN ELECTRICAL ROOM AS PER ANSI J-STD-607-A	
TBB LENGTH (LINEAR M [FT])	TBB SIZE (AWG)
LESS THAN 4 (13)	6 [4.1mm (0.16 in)]
4 TO 6 (13 TO 20)	4 [5.2mm (0.20 in)]
6 TO 8 (20 TO 26)	3 [5.8mm (0.23 in)]
8 TO 10 (26 TO 33)	2 [6.5mm (0.26 in)]
10 TO 13 (33 TO 44)	1 [7.4mm (0.29 in)]
13 TO 16 (44 TO 52)	1/0 [12.24mm (0.482 in)]
16 TO 20 (52 TO 66)	2/0 [13.41mm (0.528 in)]
GREATER THAN 20 (66)	3/0 [14.73mm (0.580 in)]

DRAWING SYMBOL

NOTES

N-1 GROUNDING BUS BAR SHALL BE MOUNTED ON PLYWOOD BACKBOARD OR WALL AT 80" A.F.F.

N-2 GROUNDING BUS BAR KIT SHALL BE PANDUIT GB2803O4TPI OR EQUIVALENT.

N-3 PANDUIT GROUNDING BUS BAR KIT COMES FULLY ASSEMBLED.
KIT INCLUDES:
BUSBAR – QTY. 1
MOUNTING BRACKET QTY. 2
INSULATIONS – QTY. 2
3/8" FLAT WASHERS – QTY. 4
3/8" LOCK WASHERS – QTY. 4
3/8" X 5 /8" CAP SCREWS – QTY. 2
3/8" X 3 /4" CAP SCREWS – QTY. 2

N-4 ALL ITEMS (GROUNDING BUS BAR KIT, BONDING BACKBONE WIRE, ETC) BY ELECTRICAL CONTRACTOR UNLESS OTHERWISE NOTED.

N-5 ELECTRICAL CONTRACTOR TO TIE-IN GROUND BUS BAR TO BASE BUILDING MAIN GROUND LOCATED IN THE BASE BUILDING ELECTRICAL ROOM, SIZES AS PER SCHEDULE ABOVE.

12 / TE-0.2 GROUNDING BUS BAR
N.T.S.

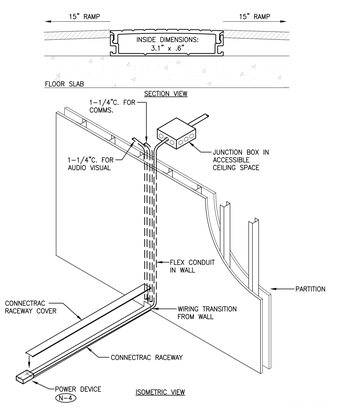

DRAWING SYMBOL
F3

NOTES:

N-1 REFER TO PLANS FOR CONNECTRAC RACEWAY LOCATIONS. BASE SYSTEM SHALL BE IN-CARPET WIREWAY PART #IN-048/096-AL.

N-2 SUPPLY AND INSTALL RACEWAYS AND POWER/COMMS. DEVICES AS INDICATED. CONSULT WITH MANUFACTURER FOR COMPLETE REQUIREMENTS AND PROVIDE ALL REQUIRED COMPONENTS AND ACCESSORIES FOR A COMPLETE AND WORKING INSTALLATION.

N-3 COORDINATE EXACT ROUTING OF RACEWAY WITH GENERAL CONTRACTOR ON SITE PRIOR TO INSTALLATION. RACEWAYS TO BE FIELD CUT AS REQUIRED. PROVIDE 45° OR 90° CORNER KITS WHERE NECESSARY.

N-4 PROVIDE POWER DEVICE PART #PS-I-288 C/W DUPLEX RECEPTACLE AND DECORA OPENING FOR COMMUNICATIONS USE.

9 / TE-0.2 UNDER CARPET CONNECTRAC RACEWAY SYSTEM DETAIL
N.T.S.

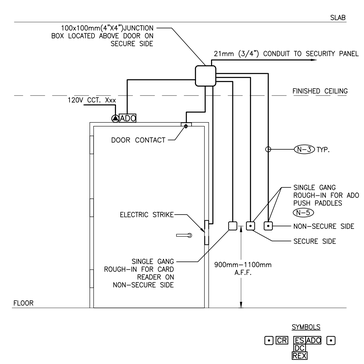

NOTES:

N-1 PROVIDE ROUGH-IN FOR ELECTRIC STIKE, JUNCTION BOX AND CONTROL DEVICES COMPLETE WITH EMT AND BLANK COVERPLATES AS INDICATED. EQUIPMENT TO BE SUPPLIED AND INSTALLED BY OTHERS.

N-2 COORDINATE FINAL LOCATIONS OF ALL DEVICES ON SITE WITH GENERAL CONTRACTOR AND SECURITY CONTRACTOR PRIOR TO ROUGH-IN.

N-3 ALL CONDUITS ARE TO BE MINIMUM 21mm (3/4") UNLESS OTHERWISE NOTED. PROVIDE PULL STRINGS IN ALL EMPTY CONDUIT.

N-4 PROVIDE CONNECTOR C/W NYLON BUSHINGS FOR OPEN ENDED CONDUIT TERMINATIONS.

N-5 AUTOMATIC DOOR OPERATOR PUSH PADDLES SHALL BE LOCATED A MINIMUM OF 600mm AND MAXIMUM OF 1500mm AWAY FROM THE DOOR SWING TO THE CENTRE OF THE DEVICE.

6 / TE-0.2 SECURITY DOOR ROUGH-IN – SINGLE DOOR ELECTRIC STRIKE C/W ADO
N.T.S.

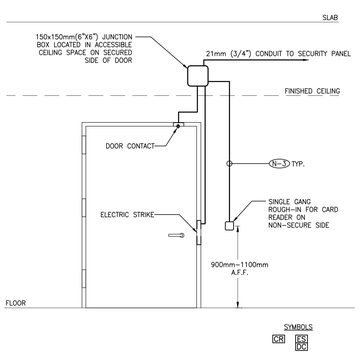

NOTES:

N-1 PROVIDE ROUGH-IN FOR ELECTRIC STRIKE, JUNCTION BOX AND CONTROL DEVICES COMPLETE WITH EMT AND BLANK COVERPLATES AS INDICATED. EQUIPMENT TO BE SUPPLIED AND INSTALLED BY OTHERS.

N-2 COORDINATE FINAL LOCATIONS OF ALL DEVICES ON SITE WITH GENERAL CONTRACTOR AND SECURITY CONTRACTOR PRIOR TO ROUGH-IN.

N-3 ALL CONDUITS ARE TO BE MINIMUM 21mm (3/4") UNLESS OTHERWISE NOTED. PROVIDE PULL STRINGS IN ALL EMPTY CONDUIT.

N-4 PROVIDE CONNECTOR C/W NYLON BUSHINGS FOR OPEN ENDED CONDUIT TERMINATIONS.

3 / TE-0.2 SECURITY DOOR ROUGH-IN – SINGLE DOOR C/W ELECTRIC STRIKE
N.T.S.

UNIVERSITY OF TORONTO SCARBOROUGH

DESIGN & CONSTRUCTION MANAGEMENT
1265 Military Trail
Toronto Ontario
M1C 1A4

NO.	DATE	REVISION NO
1	2021-06-28	ISSUED FOR 85% PERMIT REVIEW
2	2021-07-05	ISSUED FOR PERMIT
3	2021-07-21	100% TENDER CHECK SET
4	2021-08-06	ISSUED FOR TENDER

PROJECT CONTACT

NAME: Ehsan Nagahi
TEL: 647 943 7643
EMAIL: ehsan.nagahi@smithandandersen.com

THIS DRAWING SHALL BE READ IN CONJUNCTION WITH ELECTRICAL SPECIFICATION SUBMITTED FOR THIS PROJECT.

STAMP:

CONSULTANT:

Smith + Andersen
1100 – 100 Sheppard Ave. East, Toronto On, M2N 6N5
416 487 8151 / 416 487 9104 smithandandersen.com

Notes:

All dimensions and information shall be checked and verified on the site and any discrepancies must be reported to the UofT Project Manager or the UofT Project Coordinator before commencing the work. Drawings are not to be scaled.

This drawing and all aspects of its content are protected by copyright. Reproduction in whole or in part, by any means whatsoever, whether electronic, mechanical or otherwise, without the expresses written permission of the University of Toronto Scarborough, is prohibited by law.

CLIENT:
LIBRARY/ INFO & INSTRUCTIONAL TECHNOLOGY SERVICES- UNIVERSITY OF TORONTO SCARBOROUGH
TORONTO ONTARIO, M1C1A4

PROJECT #:
03118.009

PROJECT TITLE:
LIBRARY / IITS INTERIOR RENOVATION - ARC BUILDING PHASE I

LIBRARY / IITS, 1265 MILITARY TRAIL

DRAWN BY: PH
CHECKED BY: EN/NC

DRAWING TITLE:
ELECTRICAL DETAILS

DATE: 2021-04-20
SCALE: AS SHOWN
DRAWING No.: TE-0.2

PANEL: NEW 2Z
PROJECT NA ME: LIBRARY / IITS INTERIOR RENOVATION
PROJECT #: 03118.009.E.001

LOCATION: ELEC RM A C290S
FED FROM: PA NEL DP-RFF

Smith + Andersen

TYPE INFO	DESCRIPTION	D.F [%]	CONN. LOAD [W]	DEMAND LOAD [W]	DEMAND LOAD [A]	BKR [A]	CCT NO.	Φ	CCT NO.	BKR [A]	DEMAND LOAD [W]	CONN. LOAD [W]	D.F [%]	DESCRIPTION	TYPE INFO
	EX. RE-FEED FROM NEW PA NEL	100				15	1	A	2	15	560	800	70	ITS MEETING ROOM RECEPTA CLE	
	EX. RE-FEED FROM NEW PA NEL	100				15	3	B	4	15	560	800	70	ITS SERV ICE DESK RECEPTA CLE	
	EX. RE-FEED FROM NEW PA NEL	100				15	5	C	6	15	420	600	70	ITS SERV ICE DESK RECEPTA CLE	
	EX. RE-FEED FROM NEW PA NEL	100				15	7	A	8	15	280	400	70	ITS STORA GE RECEPTA CLE	
	EX. RE-FEED FROM NEW PA NEL	100				15	9	B	10	15	420	600	70	TV RECEPTA CLE	
	EX. RE-FEED FROM NEW PA NEL	100				15	11	C	12	15	210	300	70	CLIENT SERV ICES RECEPTA CLE	
	EX. RE-FEED FROM NEW PA NEL	100				20	13	A	14	15	560	800	70	FURNITURE FEED	
	EX. RE-FEED FROM NEW PA NEL	100				15	15	B	16	15	560	800	70		
	EX. RE-FEED FROM NEW PA NEL	100				15	17	C	18	15	560	800	70		
	EX. RE-FEED FROM NEW PA NEL	100				15	19	A	20	15	350	500	70	FURNITURE FEED	
	EX. RE-FEED FROM NEW PA NEL	100				15	21	B	22	15	350	500	70		
	EX. RE-FEED FROM NEW PA NEL	100				15	23	C	24	15	420	600	70	FURNITURE FEED	
	FURNITURE FEED	70	500	350		15	25	A	26	15	420	600	70		
		70	500	350		15	27	B	28	15	420	600	70		
	ECH-2.1	60	1000	600		15	29	C	30	15	280	400	70	CLIENT SERV ICES RECEPTA CLE	
		60	1000	600		20	31	A	32	15	280	400	70	CLIENT SERV ICES RECEPTA CLE	
	SPA RE	100				15	33	B	34	15	120	200	60	VAV BOX	
	PRINTER	70	800	560		20	35	C	36	15	360	600	60	VAV BOX	
	SPA RE	100				20	37	A	38	15			100	SPA RE	
	SPA RE	100				20	39	B	40	15			100	SPA RE	
	SPA RE	100				20	41	C	42	15			100	SPA RE	
	SPA CE						43	A	44					SPA CE	
	SPA CE						45	B	46					SPA CE	
	SPA CE						47	C	48					SPA CE	
	SPA CE						49	A	50					SPA CE	
	SPA CE						51	B	52					SPA CE	
	SPA CE						53	C	54					SPA CE	
	SPA CE						55	A	56					SPA CE	
	SPA CE						57	B	58					SPA CE	
	SPA CE						59	C	60					SPA CE	
	SPA CE						61	A	62					SPA CE	
	SPA CE						63	B	64					SPA CE	
	SPA CE						65	C	66					SPA CE	
	SPA CE						67	A	68					SPA CE	
	SPA CE						69	B	70					SPA CE	
	SPA CE						71	C	72					SPA CE	
	SPA CE						73	A	74					SPA CE	
	SPA CE						75	B	76					SPA CE	
	SPA CE						77	C	78					SPA CE	
	SPA CE						79	A	80					SPA CE	
	SPA CE						81	B	82					SPA CE	
	SPA CE						83	C	84					SPA CE	

PANEL OPTIONS:

2	CSA ENCLOSURE RATING	X	FLUSH
	FEED THROUGH		SURFACE
	SUB-FEED	X	BOLT-ON BREAKER
X	MAIN BREAKER		SPD
	200% RATED NEUTRAL BUS		
	ISOLATED GROUND BUS		

LOAD A [KW]:	3.4	PHASE VOLTAGE [V]:	120
LOAD B [KW]:	2.8	LINE VOLTAGE [V]:	208
LOAD C [KW]:	3.4	PHASE:	3Φ
TOTAL [KW]:	9.6	WIRE:	4
CURRENT A [A]:	28	MAINS [A]:	225
CURRENT B [A]:	23	MAIN BREAKER [A]:	
CURRENT C [A]:	28	I.C. [kA]:	10

LEGEND:

BAS-Building Automation System	R-C-Relay Controlled	LTS-Lighting
GFCI-Ground Fault Circuit Interrupter	M-Motor	HID-High Intensity Discharge Lighting Breaker
AFCI-Arc Fault Circuit Interrupter	D-F-Demand Factor	
SPD - Surge Protection Device	REC-Receptacle	D.C-Direct Connection
BLO-Breaker Lock-On Device		

NOTES:
1. Panel Enclosure To Be Sprinkler-proof.
2. Panels greater than 66 circuits to be double tub.
3. Surge Protection Device (SPD) to be in a separate barriered enclosure in th separate cover.

5 TE-0.3 PANEL SCHEDULE – 2Z
N.T.S.

PANEL: NEW 2C
PROJECT NA ME: LIBRARY / IITS INTERIOR RENOVATION
PROJECT #: 03118.009.E.001

LOCATION: TEMP OFFICES A C265
FED FROM: PA NEL DP-A

Smith + Andersen

TYPE INFO	DESCRIPTION	D.F [%]	CONN. LOAD [W]	DEMAND LOAD [W]	DEMAND LOAD [A]	BKR [A]	CCT NO.	Φ	CCT NO.	BKR [A]	DEMAND LOAD [W]	CONN. LOAD [W]	D.F [%]	DESCRIPTION	TYPE INFO
	EXISTING	100				15	1	A	2	15			100	EXISTING	
	EXISTING	100				15	3	B	4	15			100	EXISTING	
	EXISTING	100				15	5	C	6	15			100	EXISTING	
	CONV./SNENCE RECEPTA CLE	60	500	300		15	7	A	8	15			100	EXISTING	
	EXISTING	100				15	9	B	10	15			100	EXISTING	
	EXISTING	100				15	11	C	12	20			100	EXISTING	
	EXISTING	100				15	13	A	14	15			100	EXISTING	
	EXISTING	100				15	15	B	16	20			100	EXISTING	
	EXISTING	100				15	17	C	18	20			100	EXISTING	
	EXISTING	100				15	19	A	20	20			100	EXISTING	
	EXISTING	100				15	21	B	22	20			100	EXISTING	
	EXISTING	100				20	23	C	24	20			100	EXISTING	
	EXISTING	100				15	25	A	26	15			100	EXISTING	
	EXISTING	100				15	27	B	28	15	350	500	70	TBMP. FRICE RECEPTA CLE	
	EXISTING	100				15	29	C	30	20			100	EXISTING	
	EXISTING	100				15	31	A	32	15			100	EXISTING	
	EXISTING	100				15	33	B	34	15			100	EXISTING	
	TBMP. MT RM RECEPTA CLE	70	500	350		15	35	C	36	15			100	SPA RE	
	PRINTER	70	**800**	560		**20**	37	A	38	20			100	EXISTING	
	TBMP. FRICE RECEPTA CLE	70	**600**	420		15	39	B	40	15	350	500	70	TBMP. FRICE RECEPTA CLE	
		70	**600**	420		15	41	C	42	15	560	800	70	FURNITURE FEED	
	FURNITURE FEED	70	800	560		15	43	A	44	15	560	800	70		
		70	800	560		15	45	B	46	15	560	800	70		
		70	800	560		15	47	C	48	15			100	SPA RE	
	SPA RE	100				15	49	A	50	15			100	SPA RE	
	SPA RE	100				15	51	B	52	15			100	SPA RE	
	SPA RE	100				15	53	C	54	15			100	SPA RE	
	SPA RE	100				15	55	A	56	15			100	SPA RE	
	SPA RE	100				15	57	B	58	15			100	SPA RE	
	SPA CE						59	C	60					SPA CE	
	SPA CE						61	A	62					SPA CE	
	SPA CE						63	B	64					SPA CE	
	SPA CE						65	C	66					SPA CE	
	SPA CE						67	A	68					SPA CE	
	SPA CE						69	B	70					SPA CE	
	SPA CE						71	C	72					SPA CE	
	SPA CE						73	A	74					SPA CE	
	SPA CE						75	B	76					SPA CE	
	SPA CE						77	C	78					SPA CE	
	SPA CE						79	A	80					SPA CE	
	SPA CE						81	B	82					SPA CE	
	SPA CE						83	C	84					SPA CE	

PANEL OPTIONS:

2	CSA ENCLOSURE RATING	X	FLUSH
	FEED THROUGH		SURFACE
	SUB-FEED	X	BOLT-ON BREAKER
X	MAIN BREAKER		SPD
	200% RATED NEUTRAL BUS		
	ISOLATED GROUND BUS		

LOAD A [KW]:	2	PHASE VOLTAGE [V]:	120
LOAD B [KW]:	2.2	LINE VOLTAGE [V]:	208
LOAD C [KW]:	1.9	PHASE:	3Φ
TOTAL [KW]:	6.1	WIRE:	4
CURRENT A [A]:	17	MAINS [A]:	225
CURRENT B [A]:	19	MAIN BREAKER [A]:	
CURRENT C [A]:	16	I.C. [kA]:	10

LEGEND:

BAS-Building Automation System	R-C-Relay Controlled	LTS-Lighting
GFCI-Ground Fault Circuit Interrupter	M-Motor	HID-High Intensity Discharge Lighting Breaker
AFCI-Arc Fault Circuit Interrupter	D-F-Demand Factor	
SPD - Surge Protection Device	REC-Receptacle	D.C-Direct Connection
BLO-Breaker Lock-On Device		

NOTES:
ALL BREAKERS ARE SHOWN AS **BOLD** ARE NEW.

6 TE-0.3 PANEL SCHEDULE – 2C
N.T.S.

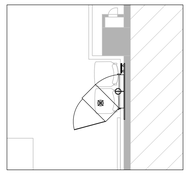

NOTES:

N-1 THIS DRAWING IS FOR SCHEMATIC PURPOSE. QUANTITIES TO SUIT CABLING REQUIREMENTS AS PER DRAWING. ALL ITEMS BY COMMUNICATIONS CONTRACTOR UNLESS OTHERWISE NOTED.

N-2 3/4"T X 8'H X 4'W FIRE RATED PLYWOOD BACKBOARD PAINTED WITH TWO (2) COATS OF NON–CONDUCTIVE FIRE RETARDANT WHITE PAINT.

N-3 TELECOMMUNICATION GROUNDING BUSBAR (T.G.B.) MOUNTED AT THE TOP OF THE BACKBOARD. BONDING OF RACKS TO THE BUS BAR SHALL BE BY COMMUNICATIONS CONTRACTOR.

N-4 19" 23U WALL MOUNTED ENCLOSURE FOR HORIZONTAL DATA CABLE, AND FIBRE BACKBONE CABLE TERMINATIONS (TYP).

N-5 ONE (1) L5–30R RECEPTACLE ON BACKBOARD. PROVIDE A NEW 30A BREAKER IN EXISTING PANEL EC LOCATE IN ELECTRICAL ROOM. ALLOW FOR ALL ASSOCIATED COST.

N-6 WHILE EVERY ATTEMPT HAS BEEN MADE TO ENSURE ALL INFORMATION IS CORRECT AT THE TIME OF PUBLICATIONS, THE PRODUCTS SPECIFIED ARE AVAILABLE AND THAT THE PART NUMBER IDENTIFIED ARE CORRECT, IT IS THE RESPONSIBILITY OF THE COMMUNICATIONS CONTRACTOR TO VERIFY ALL PART NUMBERS AND TO REPORT ANY ERRORS AND/OR OMISSIONS IN THE DRAWINGS AND SPECIFICATIONS WITH THEIR BID SUBMISSION.

7 TE-0.3 CLIENT SERVICES AC202 TELECOM RACK DETAIL
N.T.S.

LIGHTING CONTROL SCHEDULE		
TYPE	DESCRIPTION	MODEL
D	PICO WIRED 3 BUTTON RAISE/LOWER WITH ON/OFF AND PRESET	PX–3BRL–GWH–I01
OSE	CEILING MOUNT DUAL TECHNOLOGY SELF ADAPTIVE OCCUPANCY SENSOR 500 SQ.FT.	LOS–CDT–500–WH

2 TE-0.3 LIGHTING CONTROL DEVICE SCHEDULE
N.T.S.

PANEL: RELOCATED GC
PROJECT NA ME: LIBRARY / IITS INTERIOR RENOVATION
PROJECT #: 03118.009.E.001

LOCA TION: LIBRA RY: STA CKS A C280
FED FROM: PA NEL DP-A

Smith + Andersen

TYPE INFO	DESCRIPTION	D.F [%]	CONN. LOAD [W]	DEMAND LOAD [W]	DEMAND LOAD [A]	BKR [A]	CCT NO.	Φ	CCT NO.	BKR [A]	DEMAND LOAD [W]	CONN. LOAD [W]	D.F [%]	DESCRIPTION	TYPE INFO
	LIBRA RY/ RECEPTA CLE	70	400	280		15	1	A	2	15	420	600	70	STUDY ROOM RECEPTA CLE	
	LIBRA RY/ RECEPTA CLE	70	400	280		15	3	B	4	15	420	600	70	STUDY ROOM RECEPTA CLE	
	LIBRA RY/ RECEPTA CLE	70	600	420		15	5	C	6	15	420	600	70	STUDY ROOM RECEPTA CLE	
	LIBRA RY/ RECEPTA CLE	70	600	420		15	7	A	8	15	420	600	70	STUDY ROOM RECEPTA CLE	
	LIBRA RY/ RECEPTA CLE	70	400	280		15	9	B	10	15	420	600	70	STUDY ROOM RECEPTA CLE	
	LIBRA RY/ RECEPTA CLE	70	400	280		15	11	C	12	15	420	600	70	STUDY ROOM RECEPTA CLE	
	LIBRA RY/ RECEPTA CLE	70	400	280		15	13	A	14	15	420	600	70	STUDY ROOM RECEPTA CLE	
	CORRIDOR & STORA GE RECEPTA CLE	70	400	280		15	15	B	16	15	420	600	70	STUDY ROOM RECEPTA CLE	
	FURNITURE FEED	70	600	420		15	17	C	18	20	560	800	70	ATTENENTTE RECEPTA CLE	
		70	600	420		15	19	A	20	20	560	800	70	ATTENENTTE RECEPTA CLE	
		70	600	420		15	21	B	22	15	420	600	70	LIBRA RIAN OFFICE RECEPTA CLE	
	FURNITURE FEED	70	600	420		15	23	C	24	15	420	600	70	LIBRA RIAN OFFICE RECEPTA CLE	
		70	600	420		15	25	A	26	15	420	600	70	LIBRA RIAN OFFICE RECEPTA CLE	
		70	600	420		15	27	B	28	15	800	800	100	PRINTA	
	ONE BUTTON STUDIO RECEPTA CLE	70	800	560		15	29	C	30	15	350	500	70	ATTENENTTE RECEPTA CLE	
	ONE BUTTON STUDIO RECEPTA CLE	70	800	560		15	31	A	32	20			100	EX. HAND DRYER RE-FEED FROM RELOCATED PANEL	
	ONE BUTTON STUDIO RECEPTA CLE	70	800	560		15	33	B	34	15	280	400	70	ATTENENTTE RECEPTA CLE	
	SPA RE	100				15	35	C	36	15	420	600	70	COPY RM RECEPTA CLE	
	SPA RE	100				15	37	A	38	15	420	600	70	DISCUSSIFFICE RECEPTA CLE	
	PRINTER	**20**	**800**	160	**20**	**39**	**B**	**40**	15			100	EX. VAV RE-FEED FROM RELOCATED PANEL		
	EX. RE-FEED FROM RELOCATED PANEL	100			15	41	C	42	15			100	EX. VAV RE-FEED FROM RELOCATED PANEL		
	EX. RE-FEED FROM RELOCATED PANEL	100			15	43	A	44	15	420	600	70	DISCUSSIFFICE RECEPTA CLE		
	EX. RE-FEED FROM RELOCATED PANEL	100			15	45	B	46	15	420	600	70	DISCUSSIFFICE RECEPTA CLE		
	EX. RE-FEED FROM RELOCATED PANEL	100			15	47	C	48	15	210	300	70	DISCUSSIFFICE RECEPTA CLE		
	EX. RE-FEED FROM RELOCATED PANEL	100			15	49	A	50	15	240	400	60	VAV BOX		
	SPA RE	100			15	51	B	52	15	120	200	60	VAV BOX		
	EX. VAV RE-FEED FROM RELOCATED PANEL	100			15	53	C	54	15	420	600	70	DISCUSPRIVATE OFFICE RECEPTA CLE		
	EX. VAV RE-FEED FROM RELOCATED PANEL	100			15	55	A	56	15	800	800	100	SHELVIT LIGHT FIXTURES		
	EX. VAV RE-FEED FROM RELOCATED PANEL	100			15	57	B	58	15	800	800	100	SHELVIT LIGHT FIXTURES		
	EX. VAV RE-FEED FROM RELOCATED PANEL	100			15	59	C	60	15	800	800	100	SHELVIT LIGHT FIXTURES		
	VAV BOX	60	400	240	15	61	A	62	15	800	800	100	SHELVIT LIGHT FIXTURES		
	VAV BOX	60	400	240	15	63	B	64	15	800	800	100	SHELVIT LIGHT FIXTURES		
	VAV BOX	60	600	360	15	65	C	66	15	800	800	100	SHELVIT LIGHT FIXTURES		
	FURNITURE FEED	70	800	560	15	67	A	68	15	800	800	100	SHELVIT LIGHT FIXTURES		
		70	800	560	15	69	B	70	15	800	800	100	SHELVIT LIGHT FIXTURES		
		70	800	560	15	71	C	72	15			100	SPA RE		
	SPA RE	100			15	73	A	74	15			100	SPA RE		
	SPA RE	100			15	75	B	76	15			100	SPA RE		
	SPA RE	100			15	77	C	78	15			100	SPA RE		
	SPA RE	100			15	79	A	80	15			100	SPA RE		
	SPA RE	100			15	81	B	82	15			100	SPA RE		
	SPA RE	100			15	83	C	84	15			100	SPA RE		

PANEL OPTIONS:

2	CSA ENCLOSURE RATING	X	FLUSH
	FEED THROUGH		SURFACE
	SUB-FEED	X	BOLT-ON BREAKER
X	MAIN BREAKER		SPD
	200% RATED NEUTRAL BUS		
	ISOLATED GROUND BUS		

LOAD A [KW]:	8.9	PHASE VOLTAGE [V]:	120
LOAD B [KW]:	8.9	LINE VOLTAGE [V]:	208
LOAD C [KW]:	7.8	PHASE:	3Φ
TOTAL [KW]:	26	WIRE:	4
CURRENT A [A]:	74	MAINS [A]:	225
CURRENT B [A]:	74	MAIN BREAKER [A]:	
CURRENT C [A]:	65	I.C. [kA]:	10

LEGEND:

BAS-Building Automation System	R-C-Relay Controlled	LTS-Lighting
GFCI-Ground Fault Circuit Interrupter	M-Motor	HID-High Intensity Discharge Lighting Breaker
AFCI-Arc Fault Circuit Interrupter	D-F-Demand Factor	
SPD - Surge Protection Device	REC-Receptacle	D.C-Direct Connection
BLO-Breaker Lock-On Device		

NOTES:
ALL BREAKERS ARE SHOWN AS BOLD ARE NEW.

3 TE-0.3 PANEL SCHEDULE – GC
N.T.S.

PANEL: NEW GS2
PROJECT NA ME: LIBRARY / IITS INTERIOR RENOVATION
PROJECT #: 03118.009.E.001

LOCA TION: LIBRA RY: STA CKS A C280
FED FROM: PA NEL DP-A

Smith + Andersen

TYPE INFO	DESCRIPTION	D.F [%]	CONN. LOAD [W]	DEMAND LOAD [W]	DEMAND LOAD [A]	BKR [A]	CCT NO.	Φ	CCT NO.	BKR [A]	DEMAND LOAD [W]	CONN. LOAD [W]	D.F [%]	DESCRIPTION	TYPE INFO
	EX. RE-FEED FROM NEW PA NEL	100			20	1	A	2	15			100	EX. RE-FEED FROM NEW PA NEL		
	EX. RE-FEED FROM NEW PA NEL	100			20	3	B	4	15			100	EX. RE-FEED FROM NEW PA NEL		
	EX. RE-FEED FROM NEW PA NEL	100			20	5	C	6	15			100	EX. RE-FEED FROM NEW PA NEL		
	EX. RE-FEED FROM NEW PA NEL	100			20	7	A	8	15			100	EX. RE-FEED FROM NEW PA NEL		
	EX. RE-FEED FROM NEW PA NEL	100			15	9	B	10	15			100	EX. RE-FEED FROM NEW PA NEL		
	EX. RE-FEED FROM NEW PA NEL	100			15	11	C	12	15			100	EX. RE-FEED FROM NEW PA NEL		
	EX. RE-FEED FROM NEW PA NEL	100			15	13	A	14	15			100	EX. RE-FEED FROM NEW PA NEL		
	EX. RE-FEED FROM NEW PA NEL	100			15	15	B	16	15			100	EX. RE-FEED FROM NEW PA NEL		
	EX. RE-FEED FROM NEW PA NEL	100			15	17	C	18	15			100	EX. RE-FEED FROM NEW PA NEL		
	EX. RE-FEED FROM NEW PA NEL	100			15	19	A	20	15			100	EX. RE-FEED FROM NEW PA NEL		
	EX. RE-FEED FROM NEW PA NEL	100			15	21	B	22	15			100	EX. RE-FEED FROM NEW PA NEL		
	EX. RE-FEED FROM NEW PA NEL	100			15	23	C	24	15			100	EX. RE-FEED FROM NEW PA NEL		
	EX. RE-FEED FROM NEW PA NEL	100			15	25	A	26	15			100	EX. RE-FEED FROM NEW PA NEL		
	EX. RE-FEED FROM NEW PA NEL	100			15	27	B	28	15			100	EX. RE-FEED FROM NEW PA NEL		
	EX. RE-FEED FROM NEW PA NEL	100			15	29	C	30	15			100	EX. RE-FEED FROM NEW PA NEL		
	EX. RE-FEED FROM NEW PA NEL	100			15	31	A	32	15			100	EX. RE-FEED FROM NEW PA NEL		
	EX. RE-FEED FROM NEW PA NEL	100			15	33	B	34	15			100	EX. RE-FEED FROM NEW PA NEL		
	EX. RE-FEED FROM NEW PA NEL	100			15	35	C	36	15			100	EX. RE-FEED FROM NEW PA NEL		
	EX. RE-FEED FROM NEW PA NEL	100			15	37	A	38	15			100	EX. RE-FEED FROM NEW PA NEL		
	EX. RE-FEED FROM NEW PA NEL	100			15	39	B	40	15			100	EX. RE-FEED FROM NEW PA NEL		
	EX. RE-FEED FROM NEW PA NEL	100			15	41	C	42	15			100	EX. RE-FEED FROM NEW PA NEL		
	BAS CONTROL PANEL	60	500	300	**15**	**43**	**A**	**44**	**15**	600	**1000**	**60**	**ECH-2.1**		
	CU-2.1	**60**	**1800**	1080	**2P**	**45**	**B**	**46**	**2P**	600	**1000**	**60**			
		60	**1800**	1080	**2P**	**47**	**C**	**48**	**15**	600	**1000**	**60**	**ECH-2.1**		
	ECH-2.1	**60**	**1000**	600	**15**	**49**	**A**	**50**	**2P**	600	**1000**	**60**			
		60	**1000**	600	**2P**	**51**	**B**	**52**	**15**	600	**1000**	**60**	**ECH-2.1**		
	ECH-2.1	**60**	**1000**	600	**15**	**53**	**C**	**54**	**2P**	600	**1000**	**60**			
		60	**1000**	600	**2P**	**55**	**A**	**56**	**15**	600	**1000**	**60**	**ECH-2.1**		
	ECH-2.1	**60**	**1000**	600	**15**	**57**	**B**	**58**	**2P**	600	**1000**	**60**			
		60	**1000**	600	**2P**	**59**	**C**	**60**	**15**			100	SPA RE		
	SPA RE	100			15	61	A	62	15			100	SPA RE		
	SPA RE	100			15	63	B	64	15			100	SPA RE		
	SPA RE	100			15	65	C	66	15			100	SPA RE		
	SPA RE	100			15	67	A	68	15			100	SPA RE		
	SPA RE	100			15	69	B	70	15			100	SPA RE		
	SPA RE	100			15	71	C	72	15			100	SPA RE		

PANEL OPTIONS:

2	CSA ENCLOSURE RATING	X	FLUSH
	FEED THROUGH		SURFACE
	SUB-FEED	X	BOLT-ON BREAKER
X	MAIN BREAKER		SPD
	200% RATED NEUTRAL BUS		
	ISOLATED GROUND BUS		

LOAD A [KW]:	3.3	PHASE VOLTAGE [V]:	120
LOAD B [KW]:	4.1	LINE VOLTAGE [V]:	208
LOAD C [KW]:	3.5	PHASE:	3Φ
TOTAL [KW]:	11	WIRE:	4
CURRENT A [A]:	28	MAINS [A]:	225
CURRENT B [A]:	34	MAIN BREAKER [A]:	
CURRENT C [A]:	29	I.C. [kA]:	10

LEGEND:

BAS-Building Automation System	R-C-Relay Controlled	LTS-Lighting
GFCI-Ground Fault Circuit Interrupter	M-Motor	HID-High Intensity Discharge Lighting Breaker
AFCI-Arc Fault Circuit Interrupter	D-F-Demand Factor	
SPD - Surge Protection Device	REC-Receptacle	D.C-Direct Connection
BLO-Breaker Lock-On Device		

NOTES:
1. Panel Enclosure To Be Sprinkler-proof.
2. Panel shall be single tub.
3. Surge Protection Device (SPD) to be in a separate barriered enclosure in th separate cover.

4 TE-0.3 PANEL SCHEDULE – GS2
N.T.S.

Section 26 09 05.16 - LUMINAIRE SCHEDULE
Project Name: ARC Library & IITS Renovation
Project number: 03118.008

Smith + Andersen
100 Sheppard Ave
E Suite 1100
Toronto, Ontario M2N 6N5

TYPE	VOLT.	LAMP(S)	DIMENSIONS	DESCRIPTION	DRIVERS/ POWER SUPPLY	MANUFACTURER/ CATALOGUE NUMBER	MINIMUM PERFORMANCE REQUIRED	LOCATED
LED								
L1	120V	19W LED 3000K 90cri	Refer to architectural drawings for Lengths L x 3.25" W x 3.1" H	**SUSPENDED OPEN APERTURE DIRECT/INDIRECT LINEAR LED LUMINAIRE.** Anodized, extruded + machined architectural grade aluminum housing. Machined aluminum joints and endcaps. Stainless steel fasteners. 1mm stainless steel aircraft cable suspension. Clear anodized surface/ powdercoated finish. Canopies in white as standard. Anidolic optical strictures with linear light extration elements. High transmittance clear acrylic lens. Low voltage power cords factory preinstalled. Drivers integrated with suspension and mounting components. **Architect to confirm Endcap style. 20up / 80Dn. Architect to confirm finishes. 1.5ft Suspension.** Designed for use in dry/damp indoor locations. UL listed. CCEA cChicago Plenum.	0-10V dimming driver	FLUXWERX - Profile 20UPI80DN LED (PF1xD)	2091LM/4ft	**Meeting Rms**
L1a	120V	29W LED 3000K 90cri	Refer to architectural drawings for Lengths L x 3.25" W x 3.1" H	**SUSPENDED OPEN APERTURE DIRECT/INDIRECT LINEAR LED LUMINAIRE.** Anodized, extruded + machined architectural grade aluminum housing. Machined aluminum joints and endcaps. Stainless steel fasteners. 1mm stainless steel aircraft cable suspension. Clear anodized surface/ powdercoated finish. Canopies in white as standard. Anidolic optical strictures with linear light extration elements. High transmittance clear acrylic lens. Low voltage power cords factory preinstalled. Drivers integrated with suspension and mounting components. **Architect to confirm Endcap style. 20up / 80Dn. Architect to confirm finishes. 1.5ft Suspension.** Designed for use in dry/damp indoor locations. UL listed. CCEA cChicago Plenum.	0-10V dimming driver	FLUXWERX - Profile 20UPI80DN LED (PF1xD)	3126LM/4ft	**Meeting Rms**
L2	120V	5W E26 A15 LED	Shade: 23cm Dia 42cm H	**WALL MOUNT SHADE LED LUMINAIRE**. Iron, Brass Materials. Must mount on 4"x4" junction box. **To be ordered with a compatible bulb.** IP20 rated. Suitable for Dry locations.		BOVER Barcelona Lights - Carlota G		**Library**
L3	120V	10.3W LED 3000K 90cri	3.62" Dia Housing x 11" H	**SUSPENDED 3.3" DOWNLIGHT CYLINDER LED LUMINAIRE.** Extruded aluminum housing with powder coated finish. Twist and lock construction with no visible hardware. 3.3" aperture with reg

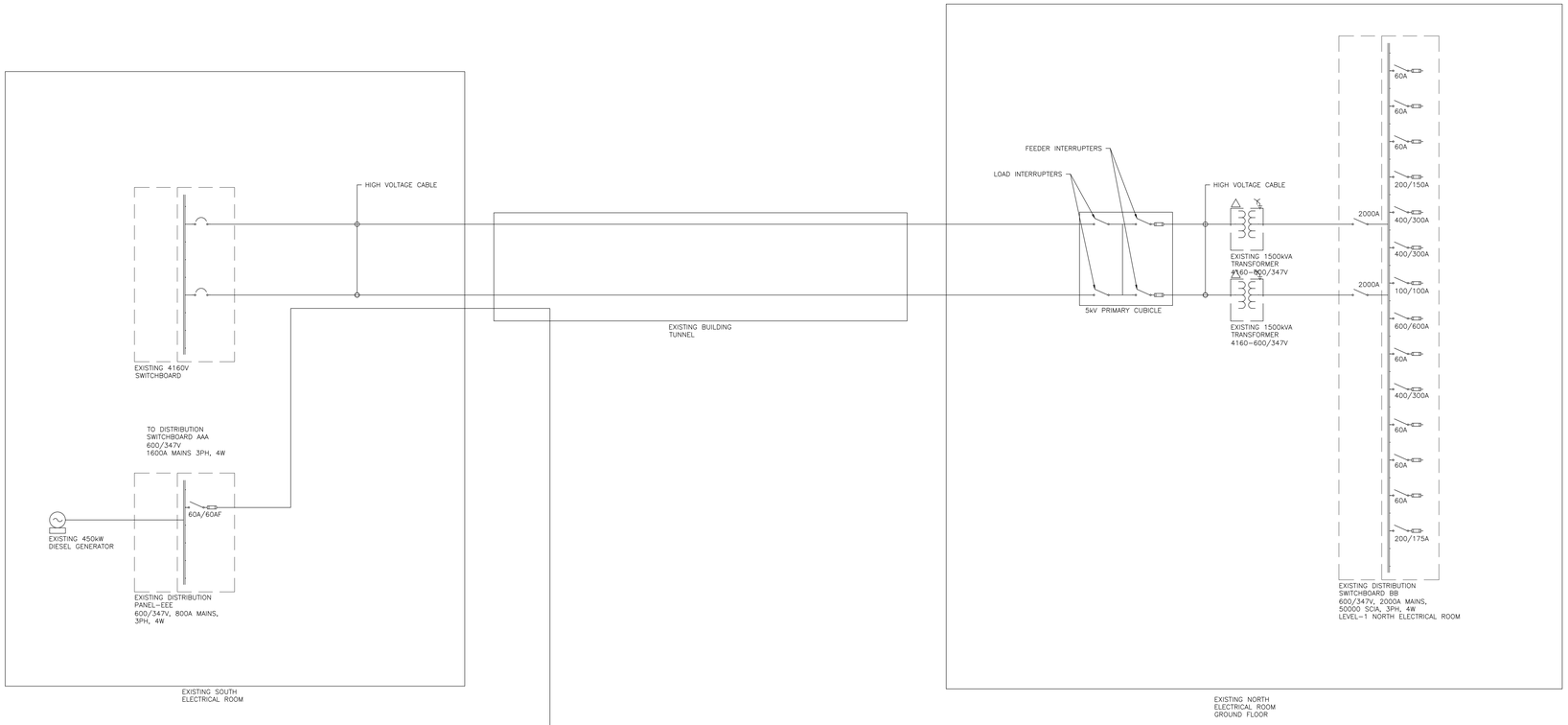

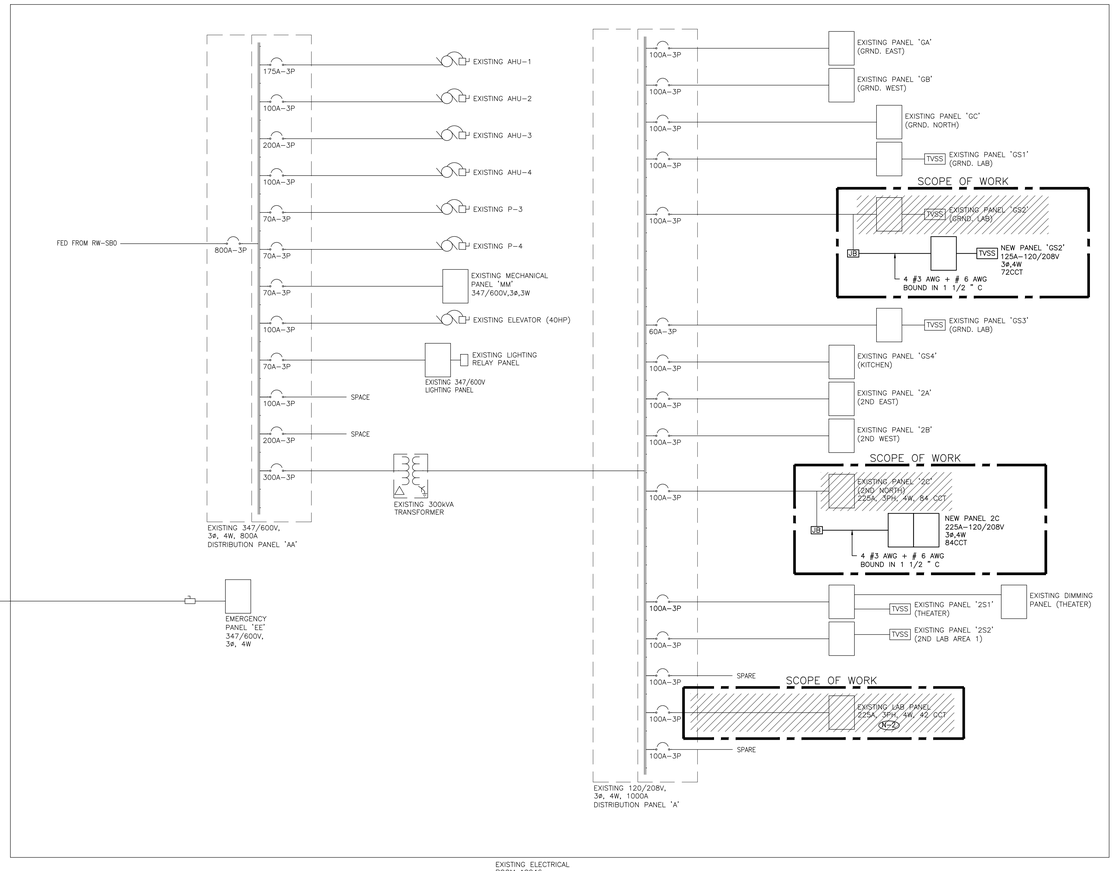

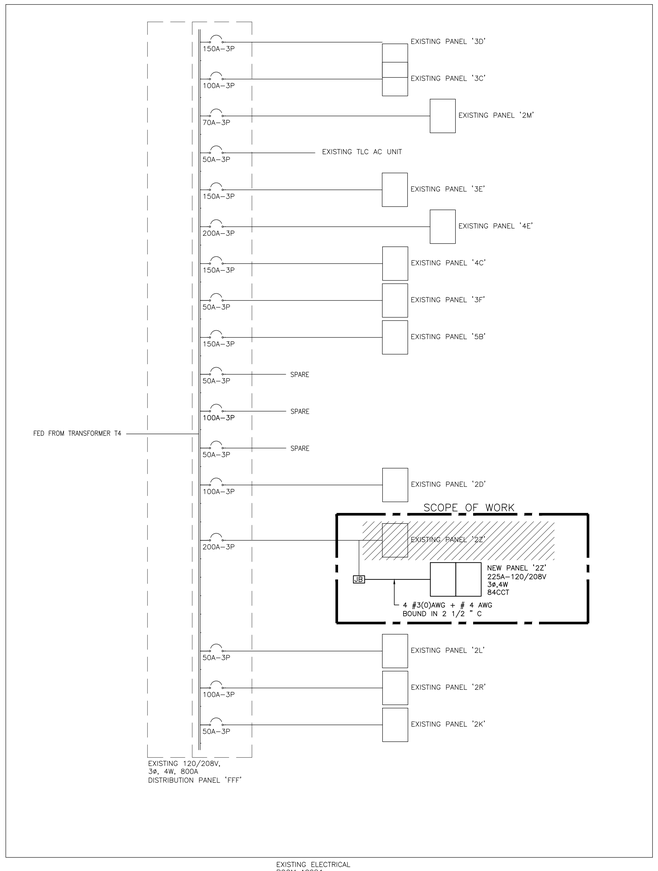

NOTES:

(N-1) EXISTING EQUIPMENT SHOWN IS TO REMAIN AND FOR REFERENCE PURPOSES ONLY UNLESS OTHERWISE NOTED.

(N-2) CONTRACTOR TO UPDATE THE PANEL DIRECTOR AND PROVIDE SPARE LABEL ON THE BREAKER.

UNIVERSITY OF TORONTO SCARBOROUGH

DESIGN & CONSTRUCTION MANAGEMENT
1265 Military Trail
Toronto Ontario
M1C 1A4

NO.	DATE	REVISION NO
1	2021-06-28	ISSUED FOR 85% PERMIT REVIEW
2	2021-07-05	ISSUED FOR PERMIT
3	2021-07-21	100% TENDER CHECK SET
4	2021-08-06	ISSUED FOR TENDER

PROJECT CONTACT

NAME: Ehsan Nagahi
TEL: 647 943 7843
EMAIL: ehsan.nagahi@smithandandersen.com

THIS DRAWING SHALL BE READ IN CONJUNCTION WITH ELECTRICAL SPECIFICATION SUBMITTED FOR THIS PROJECT.

STAMP:

CONSULTANT:

Smith + Andersen
1100 – 100 Sheppard Ave. East, Toronto On, M2N 6N5
416 487 8151 f 416 487 9104 smithandandersen.com

Notes:

All dimensions and information shall be checked and verified on the site and any discrepancies must be reported to the UofT Project Manager or the UofT Project Coordinator before commencing the work. Drawings are not to be scaled.

This drawing and all aspects of its content are protected by copyright. Reproduction in whole or in part, by any means whatsoever, whether electronic, mechanical or otherwise, without the expresses written permission of the University of Toronto Scarborough, is prohibited by law.

CLIENT:
LIBRARY/ INFO & INSTRUCTIONAL TECHNOLOGY SERVICES- UNIVERSITY OF TORONTO SCARBOROUGH
TORONTO ONTARIO, M1C1A4

PROJECT #:
03118.009

PROJECT TITLE:
LIBRARY / IITS INTERIOR RENOVATION - ARC BUILDING PHASE I

LIBRARY / IITS, 1265 MILITARY TRAIL

DRAWN BY: PH
CHECKED BY: EN/NC

DRAWING TITLE:
SINGLE LINE DIAGRAM

DATE: 2021-04-20
SCALE: AS SHOWN
DRAWING No: TE-0.4

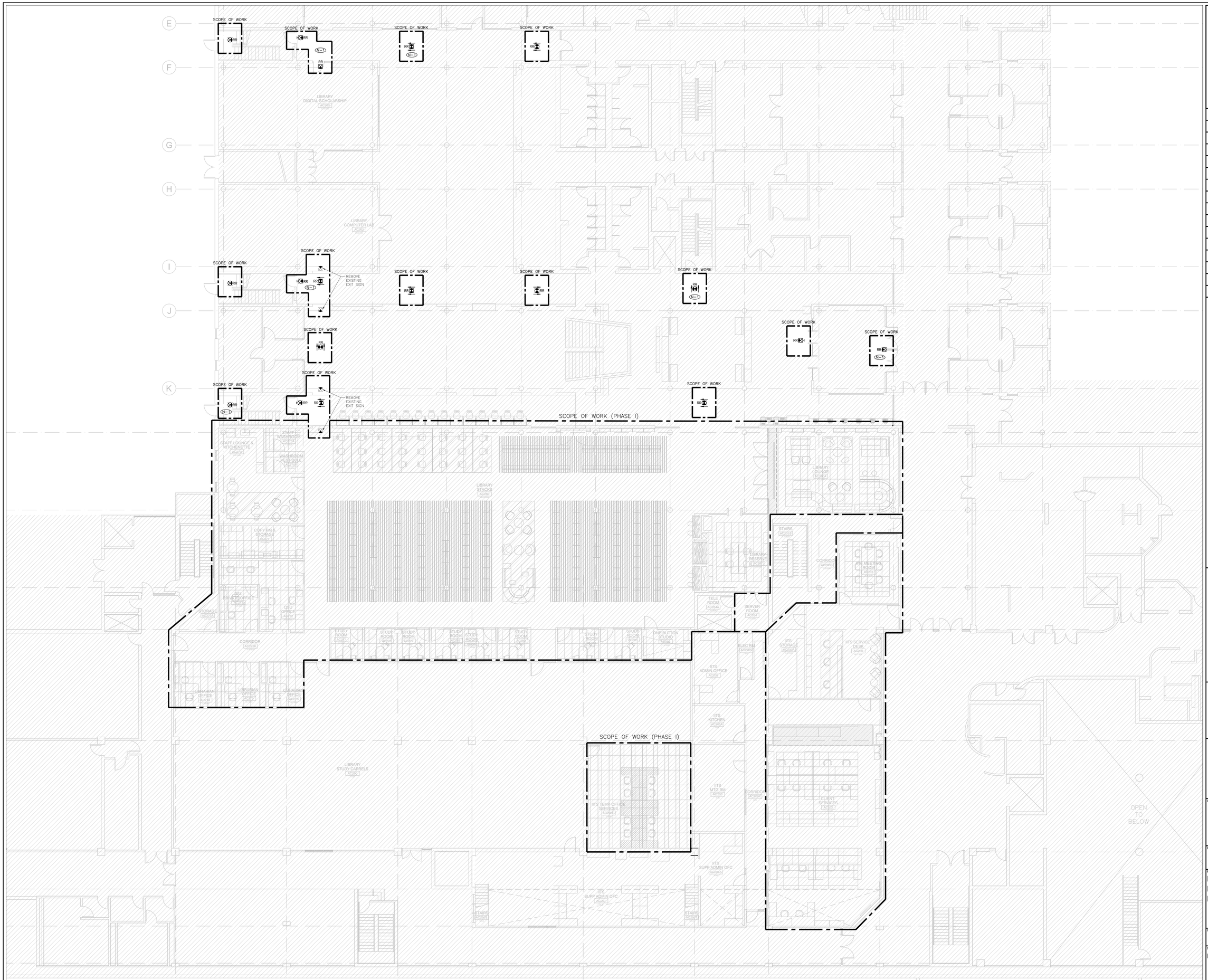

DRAWING NOTES:

(N-1) EXISTING RED EXIT SIGNS TAGGED AS "RR" TO BE REMOVE AND REPLACED WITH NEW PICTOGRAM (RUNNING MAN) TYPE EXIT SIGNS, FACES AND INDICATOR ARROWS AS PER DRAWINGS AND UNIVERSAL 120–347VAC VOLTAGE INPUT UNLESS OTHERWISE NOTED. TO MATCH EXISTING BASE BUILDING STANDARD GREEN RUNNING MAN TYPE UNLESS OTHERWISE NOTED. CONNECT NEW EXIT SIGNS TO THE NEAREST AVAILABLE SPARE EXIT LIGHTING CIRCUIT. DO NOT OVERLOAD THE CIRCUIT. ALLOW FOR FIVE (5) ADDITIONAL EXIT SIGNS (COMPLETE WITH MATERIAL AND LABOUR) TO BE INSTALLED AS PER BUILDING INSPECTORS REQUIREMENTS UPON FINAL INSPECTION (TYPICAL).

GENERAL NOTES:

1. THE CONTRACTOR TO PROVIDE A UNIT PRICE FOR REPLACING EXISTING RED EXIT SIGNS WITH NEW GREEN RUNNING MAN AND AS PER INSPECTOR REQUEST.
2. REFER TO TE–2.1 FOR NEW EXIT SIGN LAYOUT IN PHASE I.

UNIVERSITY OF TORONTO SCARBOROUGH

DESIGN & CONSTRUCTION MANAGEMENT
1265 Military Trail
Toronto Ontario
M1C 1A4

NO.	DATE	REVISION NO
1	2021-06-28	ISSUED FOR 85% PERMIT REVIEW
2	2021-07-05	ISSUED FOR PERMIT
3	2021-07-21	100% TENDER CHECK SET
4	2021-08-06	ISSUED FOR TENDER

PROJECT CONTACT

NAME: Ehsan Nagahi
TEL: 647 943 7643
EMAIL: ehsan.nagahi@smithandandersen.com

THIS DRAWING SHALL BE READ IN CONJUNCTION WITH ELECTRICAL SPECIFICATION SUBMITTED FOR THIS PROJECT.

STAMP:

CONSULTANT:

Smith + Andersen
1100 – 100 Sheppard Ave. East, Toronto On, M2N 6N5
416 487 8151 F 416 487 9104 smithandandersen.com

Notes:

All dimensions and information shall be checked and verified on the site and any discrepancies must be reported to the Uoff Project Managgr or the Uoff Project Coordinator before commencing the work. Drawings are not to be scaled.

This drawing and all aspects of its content are protected by copyright. Reproduction in whole or in part, by any means whatsoever, whether electronic, mechanical or otherwise, without the expresses written permission of the University of Toronto Scarborough, is prohibited by law.

CLIENT:
LIBRARY/ INFO & INSTRUCTIONAL TECHNOLOGY SERVICES- UNIVERSITY OF TORONTO SCARBOROUGH
TORONTO ONTARIO, M1C1A4

PROJECT #:
03118.009

PROJECT TITLE:
LIBRARY / IITS INTERIOR RENOVATION - ARC BUILDING PHASE I

LIBRARY / IITS, 1265 MILITARY TRAIL

DRAWN BY: PH
CHECKED BY: EN/NC

DRAWING TITLE:
PHASE I - LEVEL 2 KEY PLAN

DATE: 2021-04-20
SCALE: 1 : 100
DRAWING No: TE-2.0

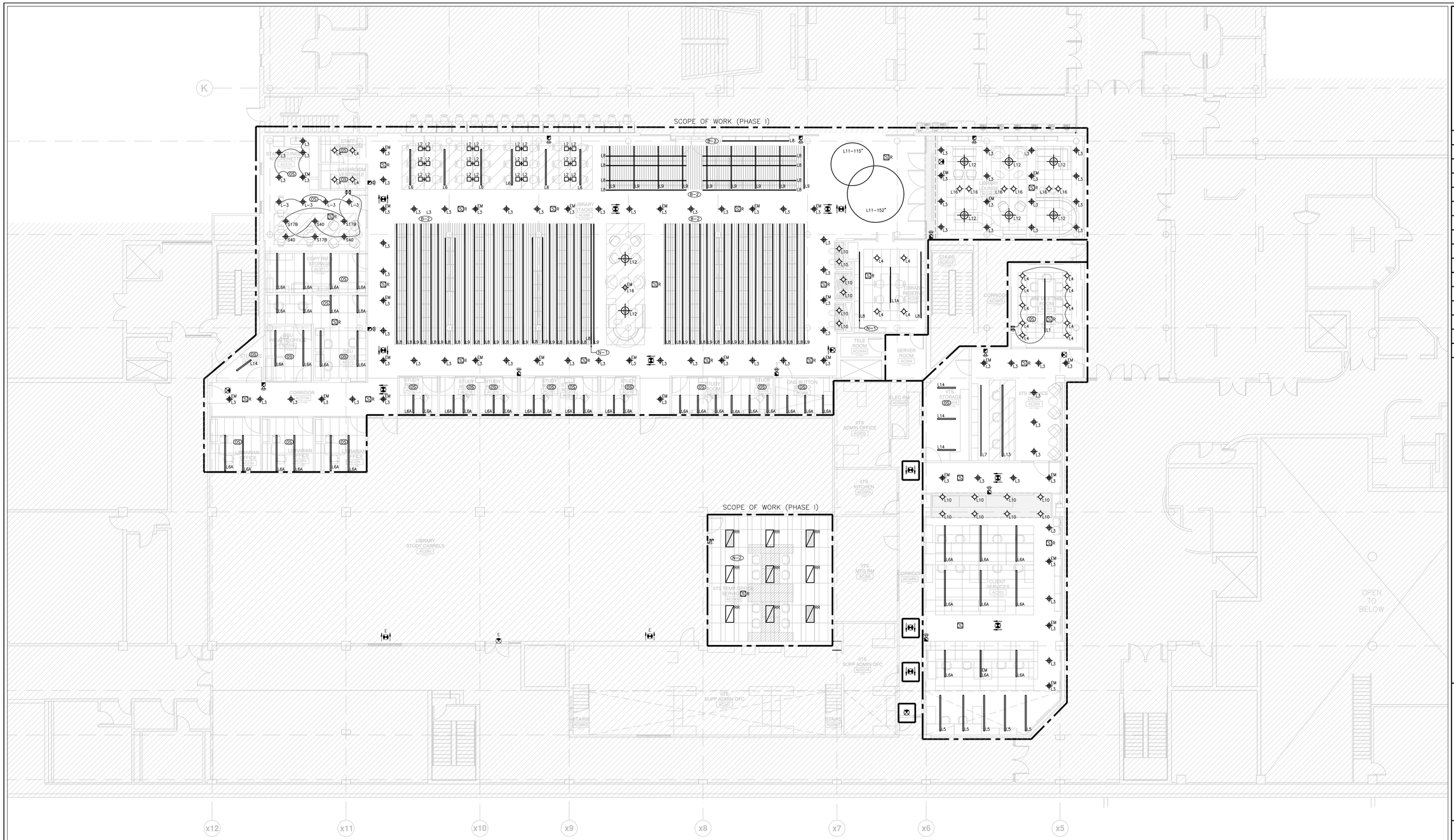

DRAWING NOTES:

N-1 LIGHTING TYPE "L8" TO BE INSTALLED ON EVERY ROW OF THE SHELVES (TYPICAL).

N-2 USE THE EXISTING LIGHTS OBTAINED TROUGH DEMOLITION. ALLOW FOR ALL ASSOCIATED COST TO RE-LAMP AND REPLACE FAULTY BALLASTS AS REQUIRED.

SEPARATE PRICE:

B-2 CONTRACTOR TO PROVIDE SEPARATE PRICE FOR ALL SHELF LIGHTING (TYPICAL).

GENERAL NOTES:

1. THESE DRAWINGS SHALL BE READ IN CONJUNCTION WITH INTERIOR DESIGNER'S/ARCHITECT'S DRAWINGS FOR DIMENSIONS, HEIGHTS, CONSTRUCTION DETAILING, FINISHES AND COLOURS.
2. PROVIDE EMT CONDUIT IN AREAS WITH EXPOSED CEILINGS AND WITHIN RAISED FLOOR, BX CABLING IS NOT ACCEPTABLE UNLESS OTHERWISE NOTED. BX CABLES MAY BE USED FOR FINAL CONNECTIONS TO LIGHTING FIXTURES OR EQUIPMENT WITH A MAXIMUM HORIZONTAL RUN LENGTH OF 3 FEET / 1 METER. PAINT CONDUITS TO MATCH ARCHITECTURAL BACKGROUNDS. MOUNT EXIT SIGNS, OCCUPANCY SENSORS, EXIT SIGNS, CAMERAS, WAPS AND ALL OTHER CEILING MOUNTED DEVICES WITH STEMS SUCH THAT THEY ARE ON THE SAME PLANE AS SUSPENDED LIGHTING FIXTURES. COORDINATE CEILINGS AND WALL HEIGHTS WITH INTERIOR DESIGNER DRAWINGS.
3. REFER TO LIGHTING LAYOUT SHOWN FOR FINAL LOCATION ONLY. VISIT THE SITE AND COORDINATE EXACT QUANTITY OF LIGHTING LUMINAIRES TO BE NEW, RELOCATED AND/OR RETAINED IN EXISTING LOCATION. PROVIDE NEW LUMINAIRES TO MATCH EXISTING WHERE INSUFFICIENT QUANTITY EXIST TO SUIT. ALL RELOCATED LUMINAIRES SHALL HAVE WIRING EXTENDED TO SUIT NEW LOCATION. OFFER ALL UNUSED EXISTING LUMINAIRES TO LANDLORD AND TURN OVER ALL SELECTED LUMINAIRES AT A PLACE DESIGNATED BY LANDLORD. DISPOSE OF ALL LUMINAIRES REJECTED BY LANDLORD.
4. ALL NEW/RELOCATED BASE BUILDING STANDARD LUMINAIRES AND NEW RECESSED DOWN LIGHTS SHALL BE CHAIN HUNG AND SUPPORTED FROM THE SLAB ABOVE. PROVIDE LETTER TO BE INCLUDED AS PART OF CLOSE-OUT DOCUMENT SUBMITTAL PACKAGE.
5. RELAMP EXISTING AND RELOCATED LUMINAIRES DUE TO BURNOUT CONDITIONS AND REPLACE FAULTY BALLASTS AS REQUIRED. INCLUDE IN BASE PRICE.
6. REWORK EXISTING EMERGENCY LIGHTING TO ACHIEVE NEW EMERGENCY LIGHTING AS SHOWN. CONNECT NEW AND/OR RELOCATED LUMINAIRES TO NEAREST EMERGENCY LIGHTING CIRCUITS ON THIS FLOOR. IF NEW EMERGENCY BRANCH CIRCUITS ARE REQUIRED FOR EMERGENCY LIGHTING AND EXISTING EMERGENCY LIGHTING PANEL IS LOCATED ON A DIFFERENT STOREY (i.e. NOT LOCATED ON SAME FLOOR), THEN NEW BRANCH CIRCUIT WIRING SHALL BE 2-HOUR FIRE RATED (i.e. MI CABLE) TO FIRST EMERGENCY LIGHT FED. IF EXISTING EMERGENCY LIGHTING PANEL IS LOCATED ON THE SAME STOREY, THE NEW BRANCH CIRCUIT WIRING DOES NOT NEED TO BE FIRE RATED. PROVIDE LOCK-ON BREAKERS TO SUIT.
7. MEASURE THE ILLUMINATION OF THE FLOOR AT NIGHT WITH EMERGENCY LIGHTING ON ONLY, AND SEND A DRAWING SHOWING THE MAXIMUM AND MINIMUM LEVEL OF ILLUMINATION, TO THE CONSULTING ENGINEER, FOR REVIEW. PROVIDE WRITTEN CONFIRMATION THAT EMERGENCY LIGHTING HAS BEEN INSTALLED IN ACCORDANCE WITH CONTRACT DOCUMENTS AND LATEST EDITION OF THE ONTARIO BUILDING CODE SECTIONS 3.2.7.3 AND 3.2.7.4. LETTER TO BE INCLUDED AS PART OF CLOSE-OUT DOCUMENT SUBMITTAL PACKAGE.
8. PROVIDE NEW PICTOGRAM (RUNNING MAN) TYPE EXIT SIGNS. EQUAL TO THOMAS AND BETTS EA SERIES COMPLETE WITH BRUSHED ALUMINUM FINISH, FACES AND INDICATOR ARROWS AS PER DRAWINGS AND UNIVERSAL 120-347VAC VOLTAGE INPUT UNLESS OTHERWISE NOTED. CONNECT NEW EXIT SIGNS TO THE NEAREST AVAILABLE SPARE EXIT LIGHTING CIRCUIT. DO NOT OVERLOAD THE CIRCUIT. ALLOW FOR THREE (3) ADDITIONAL EXIT SIGNS (COMPLETE WITH MATERIAL AND LABOUR) TO BE INSTALLED AS PER BUILDING INSPECTORS REQUIREMENTS UPON FINAL INSPECTION.
9. LOCATE AND POSITION EXIT SIGNS SUCH THAT THEY DO NOT INTERFERE WITH ADJACENT EXIT SIGNS AND EMERGENCY LIGHTING COVERAGE.
10. ENSURE THAT ALL LIGHTING FIXTURES ARE CLEAN AND ILLUMINATED BY END OF PROJECT.
11. REWORK EXISTING SWITCHING TO ACCOMMODATE THE NEW LIGHTING LAYOUT WITHIN THE TENANT SPACE.
12. THE ELECTRICAL CONTRACTOR SHALL PROVIDE POWER EXTENDERS ON ALL DIMMERS AS REQUIRED. REFER TO SPECIFICATIONS FOR DETAILS ON DIMMER RATINGS.
13. REUSE EXISTING CIRCUIT FOUND IN CEILING SPACE FOR ALL NEW LIGHTING FIXTURES UNLESS OTHERWISE NOTED. CONTRACTOR TO PROVIDE ADDITIONAL CIRCUITS WHERE REQUIRED. NEW LOW VOLTAGE SWITCH ARRANGEMENT OF LIGHTING TO BE CO-ORDINATED WITH LANDLORD AND REARRANGED TO SUIT NEW LAYOUT. ALL LIGHTING, EXCLUDING EMERGENCY, WITHIN THE TENANT PREMISES TO BE ON A SEPARATE LIGHTING ZONE AND TO BE CONTROLLED BY BASE BUILDING LIGHTING CONTROL SYSTEM. PROVIDE ALL NECESSARY RELAYS, STEP-DOWN TRANSFORMERS, CONTACTORS, RELAY PANELS, AND DRY INTERFACES REQUIRED FOR SUCH CONTROL. INCLUDE COST IN THIS CONTRACT.
14. TIE-IN NEW 347V SPECIALTY LIGHTING FIXTURES INTO TENANT LIGHTING ZONE AND TO BE CONTROLLED BY BASE BUILDING LIGHTING CONTROL SYSTEM. PROVIDE ALL NECESSARY RELAYS, CONTACTORS, RELAY PANELS, AND DRY INTERFACES REQUIRED FOR SUCH CONTROL. INCLUDE COST IN THIS CONTRACT.
15. REWORK EXISTING 347V ZONE CIRCUITS TO ACHIEVE NEW LIGHTING AS SHOWN. CONNECT NEW LUMINAIRES TO NEAREST 347V ZONE LIGHTING CIRCUITS ON THIS FLOOR. PROVIDE MASTER SWITCHES AS SHOWN, IN EACH AREA TO CONTROL LIGHTING. PROVIDE ALL RELAYS AND CONTACTORS TO ACHIEVE DESIGNED FUNCTION.
16. PROVIDE NEW LUMINAIRE DISCONNECTS THAT COMPLY WITH REQUIREMENTS SPECIFIED IN OESC PART 1, RULE 30-308(4) LATEST EDITION FOR ALL LIGHT FIXTURES THAT EXCEED 150V SHOWN AS NEW AND OR RELOCATED. ALL NEW AND RELOCATED FIXTURES (THAT EXCEED 150V) SHALL BE MARKED IN A CONSPICUOUS, LEGIBLE, AND PERMANENT MANNER ADJACENT TO THE DISCONNECTING MEANS, IDENTIFYING THE SPECIFIC PURPOSE.
17. LIGHTING FIXTURES IDENTIFIED AS EMERGENCY ARE TO BE CONNECTED SO THAT UNDER NORMAL CONDITIONS THEY WORK IN CONJUNCTION WITH THE SWITCHING AS IDENTIFIED. IN THE EVENT OF AN EMERGENCY, THESE LIGHTS ARE TO BE FORCED ON WITH THE USE OF A UL-924 LISTED RELAY. UPON POWER FAILURE THE RELAY IS TO ACTIVATE THE LIGHTS TO FULL BRIGHTNESS. REFER TO DETAIL 8/TE-0.2 FOR REQUIREMENTS.
18. COORDINATE INSTALLATION OF FIXTURES WITH MECHANICAL EQUIPMENT, ELECTRICAL EQUIPMENT, SPRINKLERS AND DUCT WORK WITH OTHER TRADES PRIOR TO WORK COMMENCING.
19. ALL CEILING MOUNTED OCCUPANCY SENSORS PROVIDED AS PART OF THIS SCOPE OF WORK MUST BE LOCATED AT LEAST 6'0" AWAY FROM ANY SUPPLY AIR DIFFUSER AND RETURN AIR GRILLE AS PER MANUFACTURER'S RECOMMENDATION. COORDINATE INSTALLATION ON SITE WITH MECHANICAL CONTRACTOR PRIOR TO COMMENCING WORK.
20. COORDINATE ALL WORK TO SUIT PROJECT PHASE SCHEDULE. COORDINATE PHASING WITH ARCHITECT/INTERIOR DESIGN/GC DRAWINGS. PHASING SHOWN IS FOR REFERENCE PURPOSES ONLY.

UNIVERSITY OF TORONTO SCARBOROUGH

DESIGN & CONSTRUCTION MANAGEMENT
1265 Military Trail
Toronto Ontario
M1C 1A4

NO.	DATE	REVISION NO
1	2021-06-28	ISSUED FOR 85% PERMIT REVIEW
2	2021-07-05	ISSUED FOR PERMIT
3	2021-07-21	100% TENDER CHECK SET
4	2021-08-06	ISSUED FOR TENDER

PROJECT CONTACT

NAME: Ehsan Nagahi
TEL: 647 943 7843
EMAIL: ehsan.nagahi@smithandandersen.com

THIS DRAWING SHALL BE READ IN CONJUNCTION WITH ELECTRICAL SPECIFICATION SUBMITTED FOR THIS PROJECT.

STAMP:

CONSULTANT:

Smith + Andersen
1100 – 100 Sheppard Ave. East, Toronto On, M2N 6N5
416 487 8151 F 416 487 9104 smithandandersen.com

Notes:

All dimensions and information shall be checked and verified on the site and any discrepancies must be reported to the UofT Project Manager or the UofT Project Coordinator before commencing the work. Drawings are not to be scaled.

This drawing and all aspects of its content are protected by copyright. Reproduction in whole or in part, by any means whatsoever, whether electronic, mechanical or otherwise, without the expressses written permission of the University of Toronto Scarborough, is prohibited by law.

CLIENT:
LIBRARY/ INFO & INSTRUCTIONAL TECHNOLOGY SERVICES- UNIVERSITY OF TORONTO SCARBOROUGH
TORONTO ONTARIO, M1C1A4

PROJECT #:
03118.009

PROJECT TITLE:
LIBRARY / IITS INTERIOR RENOVATION - ARC BUILDING PHASE I

LIBRARY / IITS, 1265 MILITARY TRAIL

DRAWN BY: PH
CHECKED BY: EN/NC

DRAWING TITLE:
PHASE I - LEVEL 2 LIGHTING AND FIRE ALARM LAYOUT

DATE: 2021-04-20
SCALE: 1 : 100
DRAWING No: TE-2.1

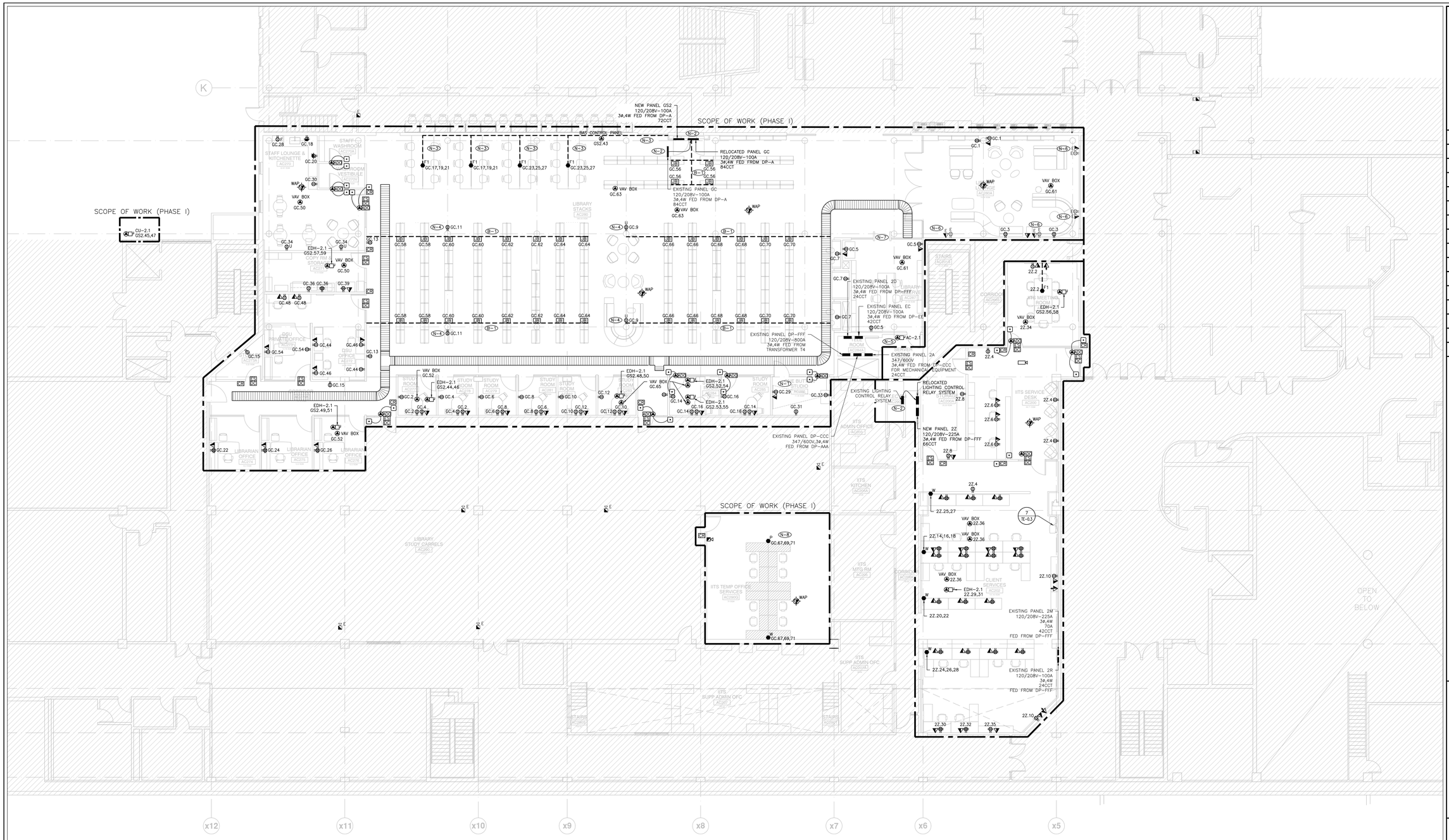

DRAWING NOTES:

N-1 REVIEW AND PROVIDE ALL REQUIREMENT FOR ONE BUTTON STUDIO PLUS. REFER TO BELOW WEBSITE FOR MORE INFORMATION: https://www.dvestore.com/one-button-studio-plus/. ALLOW FOR ALL ASSOCIATED COST.

N-2 ALL EXISTING CIRCUITS CONNECTED TO THE PANEL SHALL BE RE-FEED FROM NEW PANEL. ALLOW FOR ALL ASSOCIATED COST.

N-3 THE CONTRACTOR TO RUN IN-CARPET CONNECTRAC ALONG THE WALL AND STUB UP TO THE TABLE MONUMENTS. REFER TO ARCHITECTURAL DRAWINGS FOR MORE DETAILS.

N-4 THE RECEPTACLES SHALL RECEIVE THEIR FEED FROM CONNECTRAC AND WITH LIMITED CONDUITS ON COLUMN. THE RECEPTACLES AND COVER PLATES SHALL BE GRAY COLOUR.

N-5 AC-2.1 TO BE POWERED BY CU-2.1. REFER TO MECHANICAL DRAWINGS FOR MORE DETAILS.

N-6 THE CONTRACTOR TO REMOVE EXISTING DATA CABLES AND CAP THE DATA OUTLET.

N-7 THE CONTRACTOR SHALL COORDINATE WITH THE CLIENT TO RELOCATE AND RE-USE EXISTING POWER FOR THE SECURITY GATE. ALLOW FOR ALL ASSOCIATED COST.

N-8 THE CONTRACTOR TO ALLOW FOR ALL ASSOCIATED COST TO CONNECT THE NEW POWER FEED TO THE EXISTING FURNITURE.

SEPARATE PRICE:

B-1 PROVIDE SEPARATE PRICE FOR ALL POWER REQUIREMENTS FOR THE SHELF LIGHTING. THE CONTRACTOR TO RUN IN-CARPET CONNECTRAC ALONG WITH JUNCTION BOX FOR EACH SHELF LIGHT FIXTURES AS PER MANUFACTURER REQUIREMENTS. ALLOW FOR ALL ASSOCIATED COST TO REVIEW MANUFACTURER DETAILS AND REQUIREMENT BEFORE INSTALLATION.

GENERAL NOTES:

1. THESE DRAWINGS SHALL BE READ IN CONJUNCTION WITH INTERIOR DESIGNER'S/ARCHITECT'S DRAWINGS FOR DIMENSIONS, HEIGHTS, CONSTRUCTION DETAILING, FINISHES AND COLOURS.
2. CIRCUITING IN PART IS DIAGRAMMATIC INTENDED TO SHOW GENERAL CIRCUIT ARRANGEMENT AND PANEL DESIGNATION.
3. PROVIDE EMT CONDUIT IN AREAS WITH EXPOSED CEILINGS AND WITHIN RAISED FLOOR, BX CABLING IS NOT ACCEPTABLE UNLESS OTHERWISE NOTED. BX CABLES MAY BE USED FOR FINAL CONNECTIONS TO LIGHTING FIXTURES OR EQUIPMENT WITH A MAXIMUM HORIZONTAL RUN LENGTH OF 3 FEET / 1 METER. PAINT CONDUITS TO MATCH ARCHITECTURAL BACKGROUNDS. MOUNT EXIT SIGNS, OCCUPANCY SENSORS, EXIT SIGNS, CAMERAS, WAPS AND ALL OTHER CEILING MOUNTED DEVICES WITH STEMS SUCH THAT THEY ARE ON THE SAME PLANE AS SUSPENDED LIGHTING FIXTURES. COORDINATE CEILINGS AND WALL HEIGHTS WITH INTERIOR DESIGNER DRAWINGS.
4. REUSE CIRCUITS OBTAINED THROUGH DEMOLITION IS ACCEPTABLE.
5. VERIFY EXACT POWER REQUIREMENTS AND RECEPTACLE TYPES FOR SPECIAL EQUIPMENT WITH MANUFACTURER PRIOR TO INSTALLATION. PROVIDE HARDWIRE CONNECTIONS FOR DISHWASHERS AND COPIERS ETC. IN LIEU OF RECEPTACLES OR VICE VERSA, AS REQUIRED.
6. REFER TO INTERIOR DESIGN/ARCHITECT DRAWINGS FOR THE COLOUR OF COVERPLATES AND MOUNTING HEIGHTS.
7. MARK UP OUTLET AND DEVICE LOCATIONS AND OBTAIN APPROVAL BY DESIGN CONSULTANT PRIOR TO INSTALLATION.
8. PROVIDE SUITABLE LABELS ON ALL RECEPTACLES AND SYSTEM FURNITURE FEEDS. LABELS TO INCLUDE BOTH PANEL AND CIRCUIT DESIGNATION. REVIEW LABEL SIZE AND TYPE WITH CONSULTANT PRIOR TO INSTALLATION.
9. TRACE ALL EXISTING OUTLETS, NOTED AS EXISTING, AND IDENTIFY ON AS BUILT DRAWING AS PER SPECIFICATION.
10. CONFIRM ELECTRICAL REQUIREMENTS AND EXACT LOCATION OF ALL MECHANICAL EQUIPMENT WITH MECHANICAL DRAWINGS AND CONTRACTOR PRIOR TO ROUGH-INS.
11. ROUTE ALL CONDUIT SYSTEMS AROUND DUCT WORK, BEAMS AND PIPING AS REQUIRED TO ACCOMMODATE LAYOUT SHOWN. REFER TO MECHANICAL DRAWINGS AND ARCHITECTURAL DRAWINGS FOR ADDITIONAL DETAILS.
12. COORDINATE ALL WORK TO SUIT PROJECT PHASE SCHEDULE. COORDINATE PHASING WITH ARCHITECT/INTERIOR DESIGN/QC DRAWINGS. PHASING IF SHOWN IS FOR REFERENCE PURPOSES ONLY.

UNIVERSITY OF TORONTO SCARBOROUGH

DESIGN & CONSTRUCTION MANAGEMENT
1265 Military Trail
Toronto Ontario
M1C 1A4

NO.	DATE	REVISION NO
1	2021-06-28	ISSUED FOR 85% PERMIT REVIEW
2	2021-07-05	ISSUED FOR PERMIT
3	2021-07-21	100% TENDER CHECK SET
4	2021-08-06	ISSUED FOR TENDER

PROJECT CONTACT

NAME: Ehsan Nagahi
TEL: 647 943 7643
EMAIL: ehsan.nagahi@smithandandersen.com

THIS DRAWING SHALL BE READ IN CONJUNCTION WITH ELECTRICAL SPECIFICATION SUBMITTED FOR THIS PROJECT.

STAMP:

CONSULTANT:

Smith + Andersen
1100 – 100 Sheppard Ave. East, Toronto On, M2N 6N5
416 487 8151 F 416 487 9104 smith+andersen.com

Notes:

All dimensions and information shall be checked and verified on the site and any discrepancies must be reported to the UofT Project Manager or the UofT Project Coordinator before commencing the work. Drawings are not to be scaled.

This drawing and all aspects of its content are protected by copyright. Reproduction in whole or in part, by any means whatsoever, whether electronic, mechanical or otherwise, without the expresses written permission of the University of Toronto Scarborough, is prohibited by law.

CLIENT:
LIBRARY/ INFO & INSTRUCTIONAL TECHNOLOGY SERVICES- UNIVERSITY OF TORONTO SCARBOROUGH
TORONTO ONTARIO, M1C1A4

PROJECT #:
03118.009

PROJECT TITLE:
LIBRARY / IITS INTERIOR RENOVATION - ARC BUILDING PHASE I

LIBRARY / IITS, 1265 MILITARY TRAIL

DRAWN BY: PH
CHECKED BY: EN/NC

DRAWING TITLE:
PHASE I - LEVEL 2 POWER AND SYSTEMS LAYOUT

DATE: 2021-04-20
SCALE: 1 : 100
DRAWING No: TE-2.2

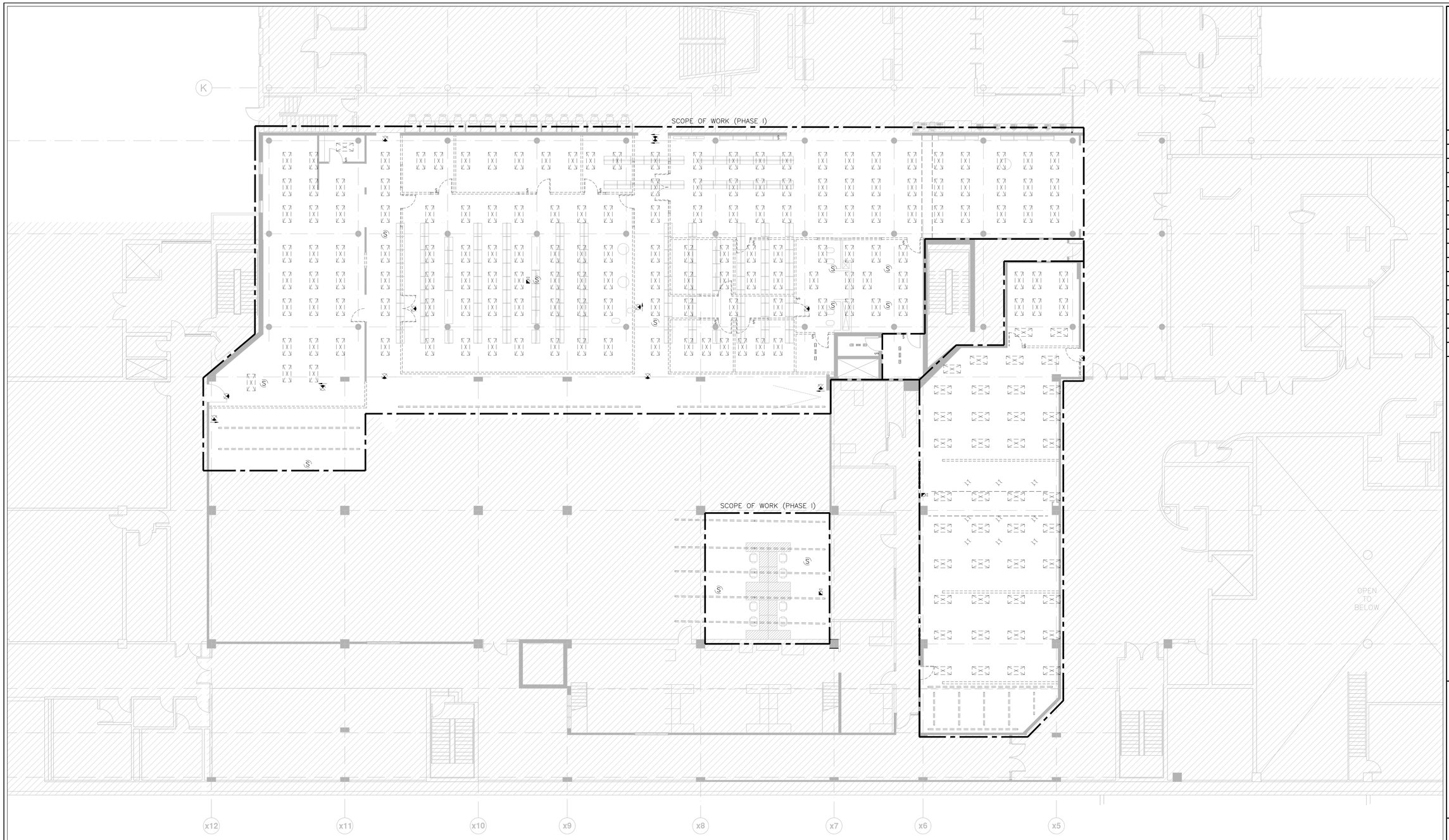

GENERAL NOTES:

1. REFER TO THE INTERIOR DESIGNER'S/ARCHITECT'S DRAWINGS TO DETERMINE COMPLETE EXTENT OF DEMOLITION AND ALLOW FOR ALL COSTS. COMPLETE EXTENT OF DEMOLITION IS NOT SHOWN.
2. MAKE GOOD ALL CORE HOLES FROM ELECTRICAL EQUIPMENT AND DEVICES DISCONNECTED, RELOCATED AND OR REMOVED IN THIS PROJECT.
3. ENSURE THAT ALL EXISTING ELECTRICAL DEVICES, EQUIPMENT AND LIGHTING WITHIN BASE BUILDING ROOMS, STAIRWELLS AND AREAS DEEMED NOT IN SCOPE, REMAIN LIVE OPERATIONAL, ISOLATED AND PROTECTED DURING CONSTRUCTION.
4. COORDINATE ALL WORK TO SUIT PROJECT PHASE SCHEDULE. COORDINATE PHASING WITH ARCHITECT/INTERIOR DESIGN/GC DRAWINGS. PHASING IF SHOWN IS FOR REFERENCE PURPOSES ONLY.
5. EXISTING CONDITIONS SHOWN ARE BASED ON DRAWINGS, FIELD SURVEY AND INFORMATION PROVIDED BY LANDLORD. ELECTRICAL CONTRACTOR TO FIELD VERIFY ALL EXISTING CONDITIONS PRIOR TO BIDDING. ANY DISCREPANCIES BETWEEN EXISTING CONDITIONS AND THOSE SHOWN HERE SHALL BE BROUGHT TO THE ATTENTION OF THE PROJECT MANAGER PRIOR TO BIDDING.
6. NO ADDITIONAL COST WILL BE APPROVED FOR ANY REVISIONS/MODIFICATIONS REQUIRED BY ANY TRADE OR CONTRACTOR DUE TO THE LACK OF COORDINATION BETWEEN TRADES AND CONTRACTORS.
7. COORDINATE WITH GENERAL CONTRACTOR AND LANDLORD FOR DISPOSAL OF ALL MATERIALS FROM SITE.
8. ELECTRICAL CONTRACTOR TO PROVIDE TEMPORARY LIGHTING FOR ENTIRE SPACE TO ACCOMMODATE DEMOLITION WORK AND FUTURE BUILD-OUT. ENSURE FIXTURES ARE CHAIN HUNG AND SUPPORTED FROM THE CEILING SLAB/STRUCTURE ABOVE.
9. EXISTING EXIT SIGNS SHALL BE MAINTAINED THROUGHOUT DEMOLITION CONSTRUCTION. PROVIDE TEMPORARY SUPPORT FROM THE CEILING SLAB/STRUCTURE ABOVE. NEW EXIT SIGNS SHALL BE PROVIDED AS PART OF NEW CONSTRUCTION PHASE.

UNIVERSITY OF TORONTO SCARBOROUGH

DESIGN & CONSTRUCTION MANAGEMENT
1265 Military Trail
Toronto Ontario
M1C 1A4

NO.	DATE	REVISION NO
1	2021-06-28	ISSUED FOR 85% PERMIT REVIEW
2	2021-07-05	ISSUED FOR PERMIT
3	2021-07-21	100% TENDER CHECK SET
4	2021-08-06	ISSUED FOR TENDER

PROJECT CONTACT

NAME: Ehsan Nagahi
TEL: 647 943 7643
EMAIL: ehsan.nagahi@smithandandersen.com

THIS DRAWING SHALL BE READ IN CONJUNCTION WITH ELECTRICAL SPECIFICATION SUBMITTED FOR THIS PROJECT.

STAMP:

CONSULTANT:

Smith + Andersen
1100 – 100 Sheppard Ave. East, Toronto On, M2N 6N5
416 487 8151 f 416 487 9104 smithandandersen.com

Notes:

All dimensions and information shall be checked and verified on the site and any discrepancies must be reported to the UofT Project Manager or the UofT Project Coordinator before commencing the work. Drawings are not to be scaled.

This drawing and all aspects of its content are protected by copyright. Reproduction in whole or in part, by any means whatsoever, whether electronic, mechanical or otherwise, without the expresses written permission of the University of Toronto Scarborough, is prohibited by law.

CLIENT:
LIBRARY/ INFO & INSTRUCTIONAL TECHNOLOGY SERVICES- UNIVERSITY OF TORONTO SCARBOROUGH
TORONTO ONTARIO, M1C1A4

PROJECT #:
03118.009

PROJECT TITLE:
LIBRARY / IITS INTERIOR RENOVATION - ARC BUILDING PHASE I

LIBRARY / IITS, 1265 MILITARY TRAIL

DRAWN BY: PH
CHECKED BY: EN/NC

DRAWING TITLE:
PHASE I - LEVEL 2 LIGHTING AND FIRE ALARM DEMOLITION LAYOUT

DATE: 2021-04-20
SCALE: 1 : 100
DRAWING No.: TE-2.3

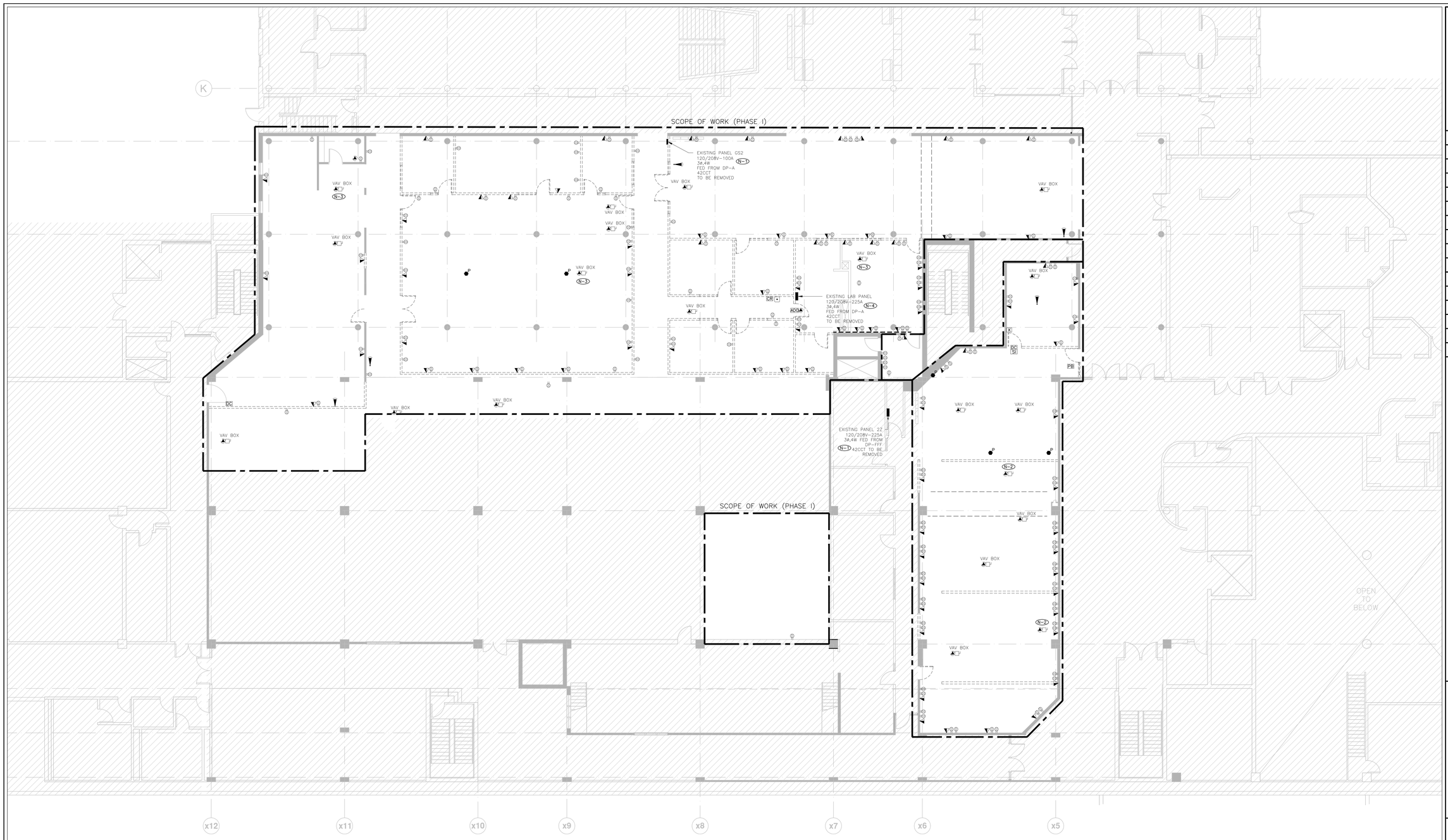

GENERAL NOTES:

1. REFER TO THE INTERIOR DESIGNER'S/ARCHITECT'S DRAWINGS TO DETERMINE COMPLETE EXTENT OF DEMOLITION AND ALLOW FOR ALL COSTS. COMPLETE EXTENT OF DEMOLITION IS NOT SHOWN.
2. REMOVE ALL FLOOR, COLUMN, CEILING, AND WALL MOUNTED POWER, TELEPHONE/DATA OUTLETS, CABLING AND CONDUIT NOT REQUIRED, TO SUIT NEW LAYOUT AND MAKE SAFE. VISIT SITE TO DETERMINE EXACT REQUIREMENTS AND REFER TO DEMOLITION DRAWINGS.
3. MAKE GOOD ALL CORE HOLES FROM ELECTRICAL EQUIPMENT AND DEVICES DISCONNECTED, RELOCATED AND OR REMOVED IN THIS PROJECT.
4. REMOVE FLOOR MONUMENT(S) AND ALL ASSOCIATED CONDUIT(S) AND WIRE BACK TO SOURCE. MAKE GOOD ALL FLOOR PENETRATIONS TO COMPLY WITH CURRENT LOCAL APPLICABLE CODES.
5. ENSURE THAT ALL EXISTING ELECTRICAL DEVICES, EQUIPMENT AND LIGHTING WITHIN BASE BUILDING ROOMS, STAIRWELLS AND AREAS DEEMED NOT IN SCOPE, REMAIN LIVE OPERATIONAL, ISOLATED AND PROTECTED DURING CONSTRUCTION.
6. COORDINATE ALL WORK TO SUIT PROJECT PHASE SCHEDULE. COORDINATE PHASING WITH ARCHITECT/INTERIOR DESIGN/GC DRAWINGS. PHASING IF SHOWN IS FOR REFERENCE PURPOSES ONLY.
7. EXISTING CONDITIONS SHOWN ARE BASED ON DRAWINGS, FIELD SURVEY AND INFORMATION PROVIDED BY LANDLORD. ELECTRICAL CONTRACTOR TO FIELD VERIFY ALL EXISTING CONDITIONS PRIOR TO BIDDING. ANY DISCREPANCIES BETWEEN EXISTING CONDITIONS AND THOSE SHOWN HERE SHALL BE BROUGHT TO THE ATTENTION OF THE PROJECT MANAGER PRIOR TO BIDDING.
8. NO ADDITIONAL COST WILL BE APPROVED FOR ANY REVISIONS/MODIFICATIONS REQUIRED BY ANY TRADE OR CONTRACTOR DUE TO THE LACK OF COORDINATION BETWEEN TRADES AND CONTRACTORS.
9. COORDINATE WITH GENERAL CONTRACTOR AND LANDLORD FOR DISPOSAL OF ALL MATERIALS FROM SITE.
10. EXISTING FIRE ALARM DEVICES SHALL BE COILED AND FULLY FUNCTIONAL THROUGHOUT DEMOLITION CONSTRUCTION. NEW FIRE ALARM DEVICES SHALL BE PROVIDED AS PART OF NEW CONSTRUCTION PHASE. REFER TO PHASING SCHEDULE FOR CONSTRUCTION SCHEDULING.

DRAWING NOTES:

N-1 ALL EXISTING CIRCUITS CONNECTED TO THE PANEL SHALL BE RE-FEED FROM NEW PANEL. ALLOW FOR ALL ASSOCIATED COST.

N-2 ELECTRICAL CONTRACTOR TO DISCONNECT POWER CONNECTION FOR EXISTING FAN COIL UNIT. ALL WIRES PULL BACK TO THE MAIN SOURCE AND MAKE IT SAFE. REFER TO MECHANICAL DRAWINGS FOR MORE DETAIL.

N-3 ELECTRICAL CONTRACTOR TO DISCONNECT POWER CONNECTION FOR VAV BOXES. ALL WIRES PULL BACK TO THE MAIN SOURCE AND MAKE IT SAFE. REFER TO MECHANICAL DRAWINGS FOR MORE DETAIL (TYPICAL).

N-4 ELECTRICAL CONTRACTOR TO DELIVER THE REMOVED PANEL TO UOFT OPERATION TEAM FIOR FUTURE USE.

UNIVERSITY OF TORONTO SCARBOROUGH

DESIGN & CONSTRUCTION MANAGEMENT
1265 Military Trail
Toronto Ontario
M1C 1A4

NO.	DATE	REVISION NO
1	2021-06-28	ISSUED FOR 85% PERMIT REVIEW
2	2021-07-05	ISSUED FOR PERMIT
3	2021-07-21	100% TENDER CHECK SET
4	2021-08-06	ISSUED FOR TENDER

PROJECT CONTACT

NAME: Ehsan Nagahi
TEL: 647 943 7643
EMAIL: ehsan.nagahi@smithandandersen.com

THIS DRAWING SHALL BE READ IN CONJUNCTION WITH ELECTRICAL SPECIFICATION SUBMITTED FOR THIS PROJECT.

STAMP:

CONSULTANT:

Smith + Andersen
1100 – 100 Sheppard Ave. East, Toronto On, M2N 6N5
416 487 8151 f 416 487 9104 smithandandersen.com

Notes:

All dimensions and information shall be checked and verified on the site and any discrepancies must be reported to the UofT Project Manager or the UofT Project Coordinator before commencing the work. Drawings are not to be scaled.

This drawing and all aspects of its content are protected by copyright. Reproduction in whole or in part, by any means whatsoever, whether electronic, mechanical or otherwise, without the expresses written permission of the University of Toronto Scarborough, is prohibited by law.

CLIENT:
LIBRARY/ INFO & INSTRUCTIONAL TECHNOLOGY SERVICES- UNIVERSITY OF TORONTO SCARBOROUGH
TORONTO ONTARIO, M1C1A4

PROJECT #:
03118.009

PROJECT TITLE:
LIBRARY / IITS INTERIOR RENOVATION - ARC BUILDING PHASE I

LIBRARY / IITS, 1265 MILITARY TRAIL

DRAWN BY: PH
CHECKED BY: EN/NC

DRAWING TITLE:
PHASE I - LEVEL 2 POWER AND SYSTEMS DEMOLITION LAYOUT

DATE: 2021-04-20
SCALE: 1 : 100
DRAWING No.: TE-2.4

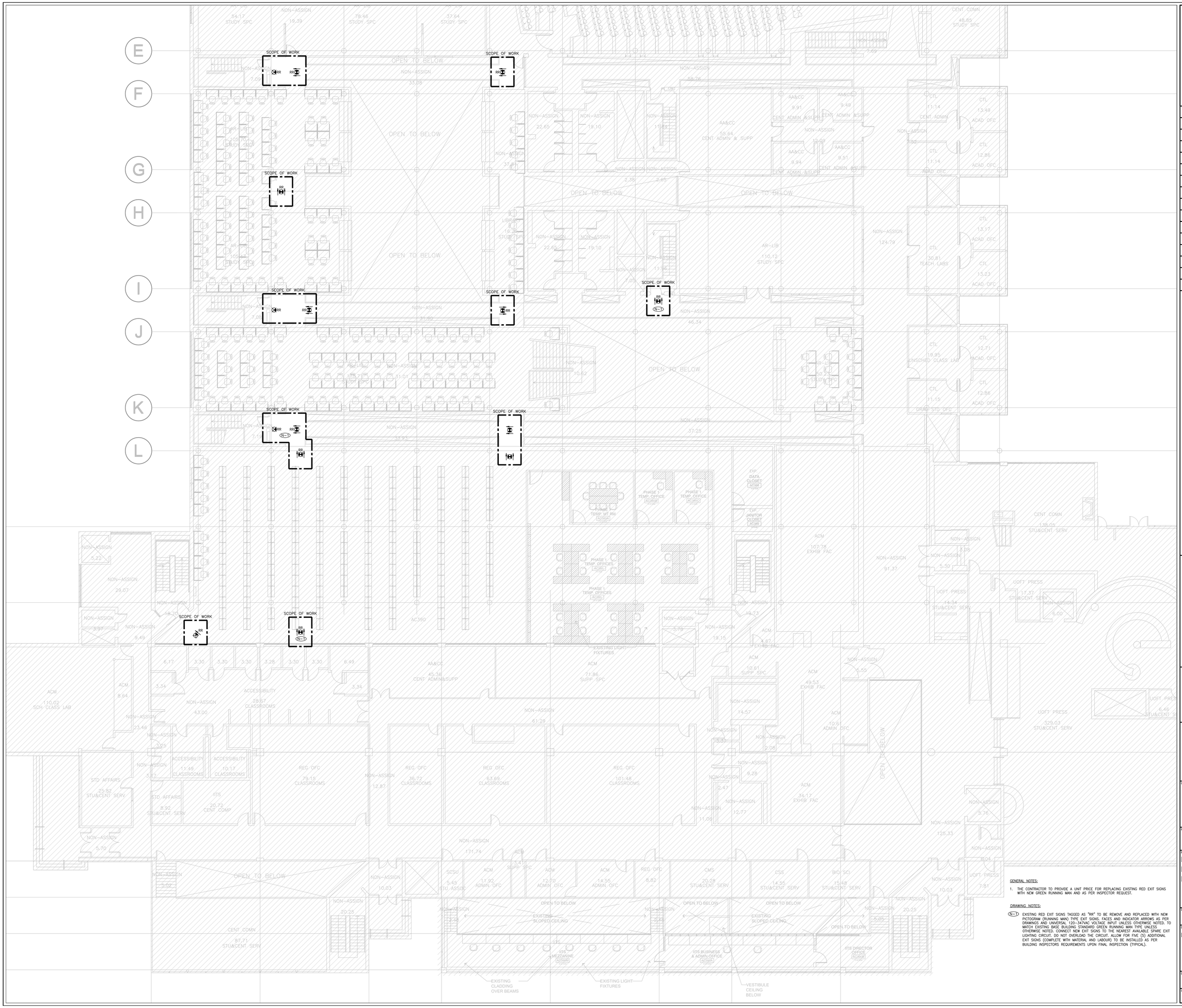

GENERAL NOTES:

1. THE CONTRACTOR TO PROVIDE A UNIT PRICE FOR REPLACING EXISTING RED EXIT SIGNS WITH NEW GREEN RUNNING MAN AND AS PER INSPECTOR REQUEST.

DRAWING NOTES:

N-1 EXISTING RED EXIT SIGNS TAGGED AS "RR" TO BE REMOVE AND REPLACED WITH NEW PICTOGRAM (RUNNING MAN) TYPE EXIT SIGNS. FACES AND INDICATOR ARROWS AS PER DRAWINGS AND UNIVERSAL 120–347VAC VOLTAGE INPUT UNLESS OTHERWISE NOTED. TO MATCH EXISTING BASE BUILDING STANDARD GREEN RUNNING MAN TYPE UNLESS OTHERWISE NOTED. CONNECT NEW EXIT SIGNS TO THE NEAREST AVAILABLE SPARE EXIT LIGHTING CIRCUIT. DO NOT OVERLOAD THE CIRCUIT. ALLOW FOR FIVE (5) ADDITIONAL EXIT SIGNS (COMPLETE WITH MATERIAL AND LABOUR) TO BE INSTALLED AS PER BUILDING INSPECTORS REQUIREMENTS UPON FINAL INSPECTION (TYPICAL).

UNIVERSITY OF TORONTO SCARBOROUGH

DESIGN & CONSTRUCTION MANAGEMENT
1265 Military Trail
Toronto Ontario
M1C 1A4

NO.	DATE	REVISION NO
1	2021-06-28	ISSUED FOR 85% PERMIT REVIEW
2	2021-07-05	ISSUED FOR PERMIT
3	2021-07-21	100% TENDER CHECK SET
4	2021-08-06	ISSUED FOR TENDER

PROJECT CONTACT

NAME: Ehsan Nagahi
TEL: 647 943 7643
EMAIL: ehsan.nagahi@smithandandersen.com

THIS DRAWING SHALL BE READ IN CONJUNCTION WITH ELECTRICAL SPECIFICATION SUBMITTED FOR THIS PROJECT.

STAMP:

CONSULTANT:

Smith + Andersen
1100 – 100 Sheppard Ave. East, Toronto On, M2N 6N5
416 487 8151 F 416 487 9104 smithandandersen.com

Notes:

All dimensions and information shall be checked and verified on the site and any discrepancies must be reported to the UofT Project Manager or the UofT Project Coordinator before commencing the work. Drawings are not to be scaled.

This drawing and all aspects of its content are protected by copyright. Reproduction in whole or in part, by any means whatsoever, whether electronic, mechanical or otherwise, without the expresses written permission of the University of Toronto Scarborough, is prohibited by law.

CLIENT:
LIBRARY/ INFO & INSTRUCTIONAL TECHNOLOGY SERVICES- UNIVERSITY OF TORONTO SCARBOROUGH
TORONTO ONTARIO, M1C1A4

PROJECT #:
03118.009

PROJECT TITLE:
LIBRARY / IITS INTERIOR RENOVATION - ARC BUILDING PHASE I

LIBRARY / IITS, 1265 MILITARY TRAIL

DRAWN BY: PH
CHECKED BY: EN/NC

DRAWING TITLE:
PHASE I - LEVEL 3 KEY PLAN

DATE: 2021-04-20
SCALE: 1 : 100
DRAWING No: TE-3.0

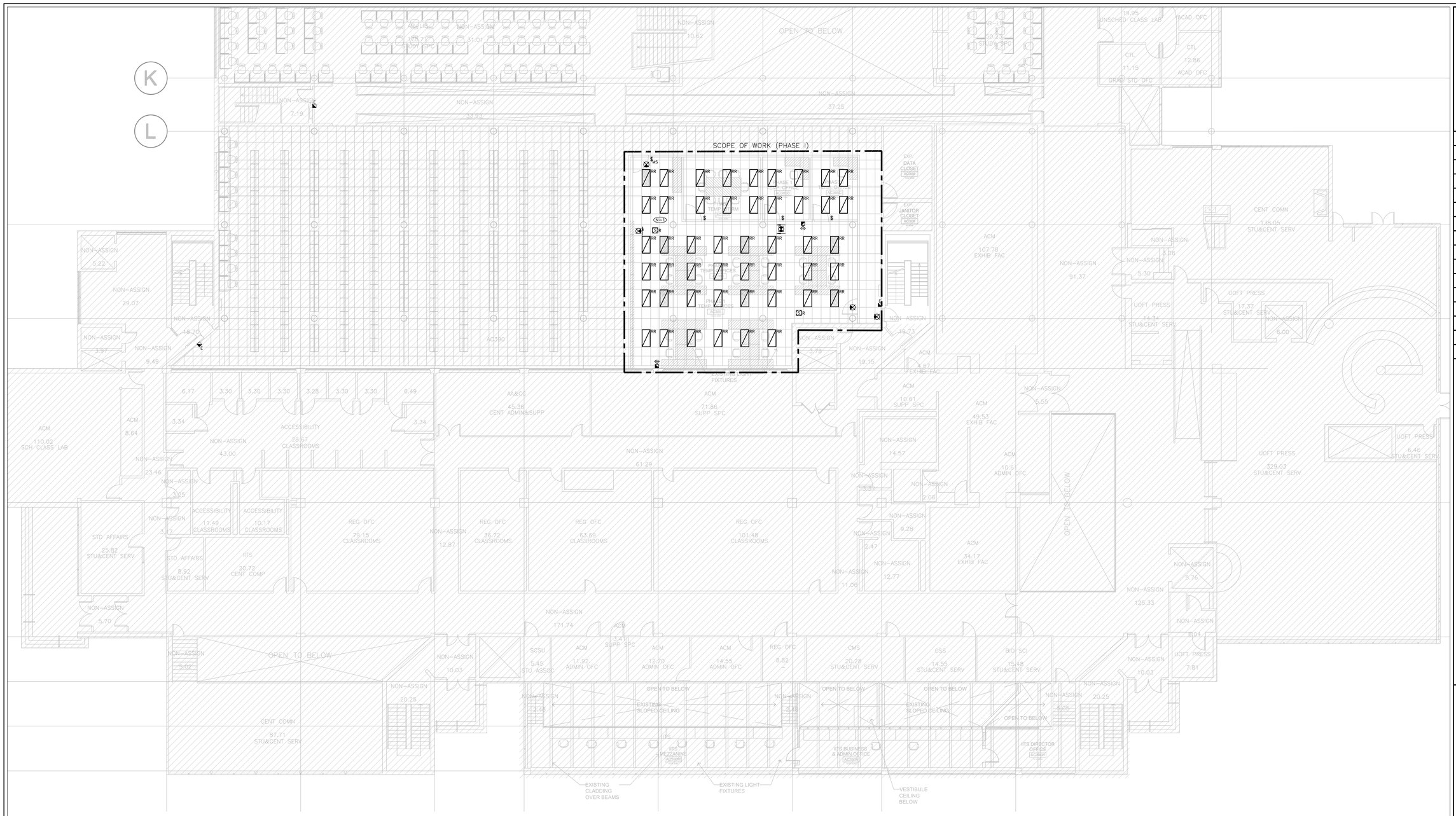

GENERAL NOTES:

1. THESE DRAWINGS SHALL BE READ IN CONJUNCTION WITH INTERIOR DESIGNER'S/ARCHITECT'S DRAWINGS FOR DIMENSIONS, HEIGHTS, CONSTRUCTION DETAILING, FINISHES AND COLOURS.
2. PROVIDE EMT CONDUIT IN AREAS WITH EXPOSED CEILINGS AND WITHIN RAISED FLOOR, BX CABLING IS NOT ACCEPTABLE UNLESS OTHERWISE NOTED. BX CABLES MAY BE USED FOR FINAL CONNECTIONS TO LIGHTING FIXTURES OR EQUIPMENT WITH A MAXIMUM HORIZONTAL RUN LENGTH OF 3 FEET / 1 METER. PAINT CONDUITS TO MATCH ARCHITECTURAL BACKGROUNDS. MOUNT EXIT SIGNS, OCCUPANCY SENSORS, EXIT SIGNS, CAMERAS, WAPS AND ALL OTHER CEILING MOUNTED DEVICES WITH STEMS SUCH THAT THEY ARE ON THE SAME PLANE AS SUSPENDED LIGHTING FIXTURES. COORDINATE CEILINGS AND WALL HEIGHTS WITH INTERIOR DESIGNER DRAWINGS.
3. REFER TO LIGHTING LAYOUT SHOWN FOR FINAL LOCATION ONLY. VISIT THE SITE AND COORDINATE EXACT QUANTITY OF LIGHTING LUMINAIRES TO BE NEW, RELOCATED AND/OR RETAINED IN EXISTING LOCATION. PROVIDE NEW LUMINAIRES TO MATCH EXISTING WHERE INSUFFICIENT QUANTITY EXIST TO SUIT. ALL RELOCATED LUMINAIRES SHALL HAVE WIRING EXTENDED TO SUIT NEW LOCATION. OFFER ALL UNUSED EXISTING LUMINAIRES TO LANDLORD AND TURN OVER ALL SELECTED LUMINAIRES AT A PLACE DESIGNATED BY LANDLORD. DISPOSE OF ALL LUMINAIRES REJECTED BY LANDLORD.
4. ALL NEW/RELOCATED BASE BUILDING STANDARD LUMINAIRES AND NEW RECESSED DOWN LIGHTS SHALL BE CHAIN HUNG AND SUPPORTED FROM THE SLAB ABOVE. PROVIDE LETTER TO BE INCLUDED AS PART OF CLOSE-OUT DOCUMENT SUBMITTAL PACKAGE.
5. RELAMP EXISTING AND RELOCATED LUMINAIRES DUE TO BURNOUT CONDITIONS AND REPLACE FAULTY BALLASTS AS REQUIRED. INCLUDE IN BASE PRICE.
6. REWORK EXISTING EMERGENCY LIGHTING TO ACHIEVE NEW EMERGENCY LIGHTING AS SHOWN. CONNECT NEW AND/OR RELOCATED LUMINAIRES TO NEAREST EMERGENCY LIGHTING CIRCUITS ON THIS FLOOR. IF NEW EMERGENCY BRANCH CIRCUITS ARE REQUIRED FOR EMERGENCY LIGHTING AND EXISTING EMERGENCY LIGHTING PANEL IS LOCATED ON A DIFFERENT STOREY (i.e. NOT LOCATED ON SAME FLOOR), THEN NEW BRANCH CIRCUIT WIRING SHALL BE 2-HOUR FIRE RATED (i.e. MI CABLE) TO FIRST EMERGENCY LIGHT FED. IF EXISTING EMERGENCY LIGHTING PANEL IS LOCATED ON THE SAME STOREY, THE NEW BRANCH CIRCUIT WIRING DOES NOT NEED TO BE FIRE RATED. PROVIDE LOCK-ON BREAKERS TO SUIT.
7. MEASURE THE ILLUMINATION OF THE FLOOR AT NIGHT WITH EMERGENCY LIGHTING ON ONLY, AND SEND A DRAWING SHOWING THE MAXIMUM AND MINIMUM LEVEL OF ILLUMINATION, TO THE CONSULTING ENGINEER, FOR REVIEW. PROVIDE WRITTEN CONFIRMATION THAT EMERGENCY LIGHTING HAS BEEN INSTALLED IN ACCORDANCE WITH CONTRACT DOCUMENTS AND LATEST EDITION OF THE ONTARIO BUILDING CODE SECTIONS 3.2.7.3 AND 3.2.7.4. LETTER TO BE INCLUDED AS PART OF CLOSE-OUT DOCUMENT SUBMITTAL PACKAGE.
8. PROVIDE NEW PICTOGRAM (RUNNING MAN) TYPE EXIT SIGNS. EQUAL TO THOMAS AND BETTS EA SERIES COMPLETE WITH BRUSHED ALUMINUM FINISH, FACES AND INDICATOR ARROWS AS PER DRAWINGS AND UNIVERSAL 120-347VAC VOLTAGE INPUT UNLESS OTHERWISE NOTED. CONNECT NEW EXIT SIGNS TO THE NEAREST AVAILABLE SPARE EXIT LIGHTING CIRCUIT. DO NOT OVERLOAD THE CIRCUIT. ALLOW FOR THREE (3) ADDITIONAL EXIT SIGNS (COMPLETE WITH MATERIAL AND LABOUR) TO BE INSTALLED AS PER BUILDING INSPECTORS REQUIREMENTS UPON FINAL INSPECTION.
9. LOCATE AND POSITION EXIT SIGNS SUCH THAT THEY DO NOT INTERFERE WITH ADJACENT EXIT SIGNS AND EMERGENCY LIGHTING COVERAGE.
10. ENSURE THAT ALL LIGHTING FIXTURES ARE CLEAN AND ILLUMINATED BY END OF PROJECT.
11. REWORK EXISTING SWITCHING TO ACCOMMODATE THE NEW LIGHTING LAYOUT WITHIN THE TENANT SPACE.
12. THE ELECTRICAL CONTRACTOR SHALL PROVIDE POWER EXTENDERS ON ALL DIMMERS AS REQUIRED. REFER TO SPECIFICATIONS FOR DETAILS ON DIMMER RATINGS.
13. REUSE EXISTING CIRCUIT FOUND IN CEILING SPACE FOR ALL NEW LIGHTING FIXTURES UNLESS OTHERWISE NOTED. CONTRACTOR TO PROVIDE ADDITIONAL CIRCUITS WHERE REQUIRED. NEW LOW VOLTAGE SWITCH ARRANGEMENT OF LIGHTING TO BE CO-ORDINATED WITH LANDLORD AND REARRANGED TO SUIT NEW LAYOUT. ALL LIGHTING, EXCLUDING EMERGENCY, WITHIN THE TENANT PREMISES TO BE ON A SEPARATE LIGHTING ZONE AND TO BE CONTROLLED BY BASE BUILDING LIGHTING CONTROL SYSTEM. PROVIDE ALL NECESSARY RELAYS, CONTACTORS, RELAY PANELS, AND DRY INTERFACES REQUIRED FOR SUCH CONTROL. INCLUDE COST IN THIS CONTRACT.
14. TIE-IN NEW 347V SPECIALTY LIGHTING FIXTURES INTO TENANT LIGHTING ZONE AND TO BE CONTROLLED BY BASE BUILDING LIGHTING CONTROL SYSTEM. PROVIDE ALL NECESSARY RELAYS, CONTACTORS, RELAY PANELS, AND DRY INTERFACES REQUIRED FOR SUCH CONTROL. INCLUDE COST IN THIS CONTRACT.
15. REWORK EXISTING 347V ZONE CIRCUITS TO ACHIEVE NEW LIGHTING AS SHOWN. CONNECT NEW LUMINAIRES TO NEAREST 347V ZONE LIGHTING CIRCUITS ON THIS FLOOR. PROVIDE MASTER SWITCHES AS SHOWN, IN EACH AREA TO CONTROL LIGHTING. PROVIDE ALL RELAYS AND CONTACTORS TO ACHIEVE DESIGNED FUNCTION.
16. PROVIDE NEW LUMINAIRE DISCONNECTS THAT COMPLY WITH REQUIREMENTS SPECIFIED IN OESC PART 1, RULE 30-308(4) LATEST EDITION FOR ALL LIGHT FIXTURES THAT EXCEED 150V SHOWN AS NEW AND OR RELOCATED. ALL NEW AND RELOCATED FIXTURES (THAT EXCEED 150V) SHALL BE MARKED IN A CONSPICUOUS, LEGIBLE, AND PERMANENT MANNER ADJACENT TO THE DISCONNECTING MEANS, IDENTIFYING THE SPECIFIC PURPOSE.
17. LIGHTING FIXTURES IDENTIFIED AS EMERGENCY ARE TO BE CONNECTED SO THAT UNDER NORMAL CONDITIONS THEY WORK IN CONJUNCTION WITH THE SWITCHING AS IDENTIFIED. IN THE EVENT OF AN EMERGENCY, THESE LIGHTS ARE TO BE FORCED ON WITH THE USE OF A UL-924 LISTED RELAY. UPON POWER FAILURE THE RELAY IS TO ACTIVATE THE LIGHTS TO FULL BRIGHTNESS. REFER TO DETAIL 8/TE-0.2 FOR REQUIREMENTS.
18. COORDINATE INSTALLATION OF FIXTURES WITH MECHANICAL EQUIPMENT, ELECTRICAL EQUIPMENT, SPRINKLERS AND DUCT WORK WITH OTHER TRADES PRIOR TO WORK COMMENCING.
19. ALL CEILING MOUNTED OCCUPANCY SENSORS PROVIDED AS PART OF THIS SCOPE OF WORK MUST BE LOCATED AT LEAST 6'0" AWAY FROM ANY SUPPLY AIR DIFFUSER AND RETURN AIR GRILLE AS PER MANUFACTURER'S RECOMMENDATION. COORDINATE INSTALLATION ON SITE WITH MECHANICAL CONTRACTOR PRIOR TO COMMENCING WORK.
20. COORDINATE ALL WORK TO SUIT PROJECT PHASE SCHEDULE. COORDINATE PHASING WITH ARCHITECT/INTERIOR DESIGN/GC DRAWINGS. PHASING SHOWN IS FOR REFERENCE PURPOSES ONLY.

DRAWING NOTES:

(N-1) USE THE EXISTING LIGHTS OBTAINED TROUGH DEMOLITION. ALLOW FOR ALL ASSOCIATED COST TO RE LAMP AND REPLACE FAULTY BALLASTS AS REQUIRED.

UNIVERSITY OF TORONTO SCARBOROUGH

DESIGN & CONSTRUCTION MANAGEMENT
1265 Military Trail
Toronto Ontario
M1C 1A4

NO.	DATE	REVISION NO
1	2021-06-28	ISSUED FOR 85% PERMIT REVIEW
2	2021-07-05	ISSUED FOR PERMIT
3	2021-07-21	100% TENDER CHECK SET
4	2021-08-06	ISSUED FOR TENDER

PROJECT CONTACT

NAME: Ehsan Nagahi
TEL: 647 943 7643
EMAIL: ehsan.nagahi@smithandandersen.com

THIS DRAWING SHALL BE READ IN CONJUNCTION WITH ELECTRICAL SPECIFICATION SUBMITTED FOR THIS PROJECT.

STAMP:

CONSULTANT:

Smith + Andersen
1100 – 100 Sheppard Ave. East, Toronto On, M2N 6N5
416 487 8151 F 416 487 9104 smithandandersen.com

Notes:

All dimensions and information shall be checked and verified on the site and any discrepancies must be reported to the UofT Project Manager or the UofT Project Coordinator before commencing the work. Drawings are not to be scaled.

This drawing and all aspects of its content are protected by copyright. Reproduction in whole or in part, by any means whatsoever, whether electronic, mechanical or otherwise, without the expresses written permission of the University of Toronto Scarborough, is prohibited by law.

CLIENT:
LIBRARY/ INFO & INSTRUCTIONAL TECHNOLOGY SERVICES- UNIVERSITY OF TORONTO SCARBOROUGH
TORONTO ONTARIO, M1C1A4

PROJECT #:
03118.009

PROJECT TITLE:
LIBRARY / IITS INTERIOR RENOVATION - ARC BUILDING PHASE I

LIBRARY / IITS, 1265 MILITARY TRAIL

DRAWN BY: PH
CHECKED BY: EN/NC

DRAWING TITLE:
PHASE I - LEVEL 3 LIGHTING AND FIRE ALARM LAYOUT

DATE: 2021-04-20
SCALE: 1 : 100
DRAWING No: TE-3.1

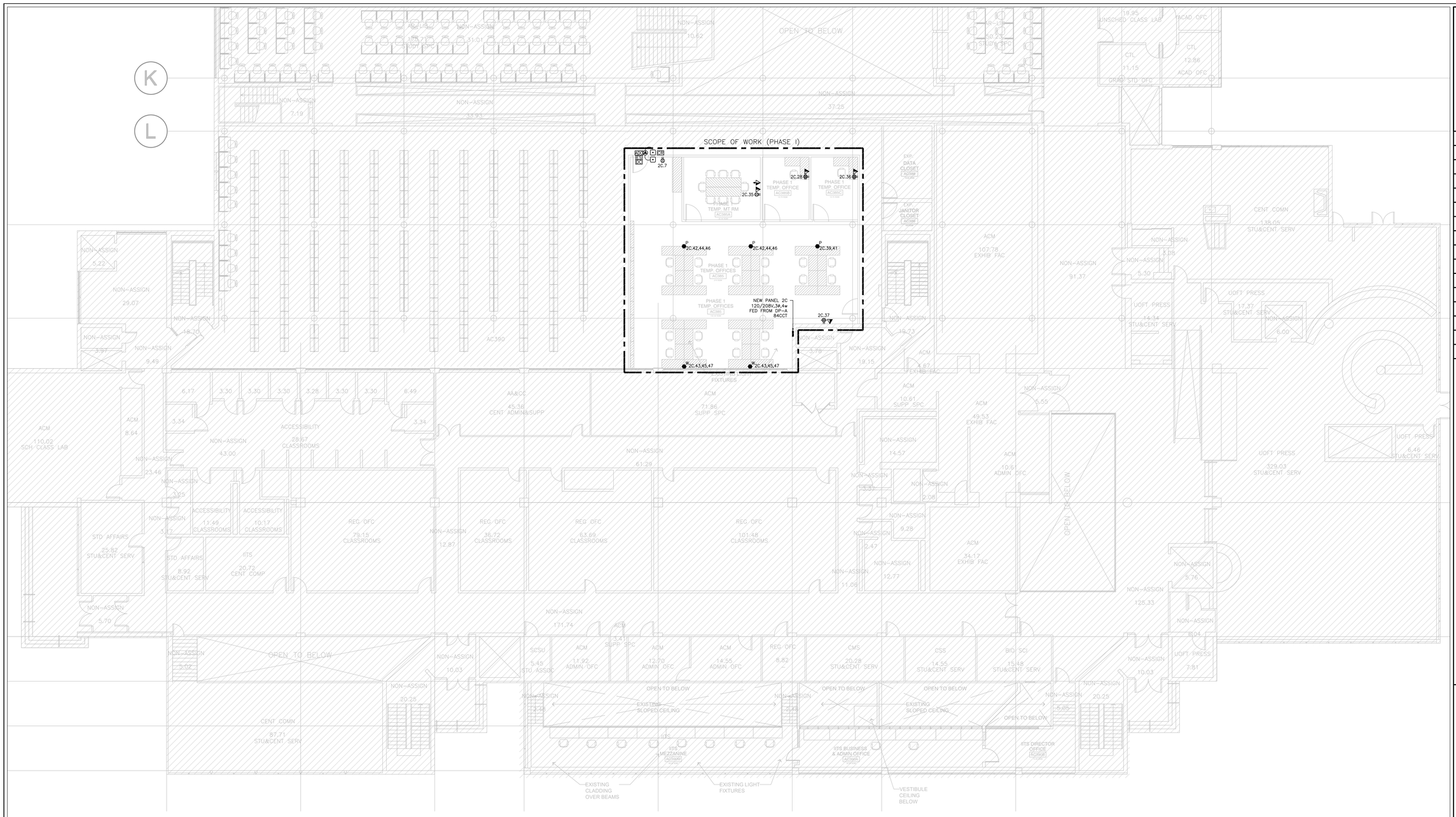

GENERAL NOTES:

1. THESE DRAWINGS SHALL BE READ IN CONJUNCTION WITH INTERIOR DESIGNER'S/ARCHITECT'S DRAWINGS FOR DIMENSIONS, HEIGHTS, CONSTRUCTION DETAILING, FINISHES AND COLOURS.
2. CIRCUITING IN PART IS DIAGRAMMATIC INTENDED TO SHOW GENERAL CIRCUIT ARRANGEMENT AND PANEL DESIGNATION.
3. PROVIDE EMT CONDUIT IN AREAS WITH EXPOSED CEILINGS AND WITHIN RAISED FLOOR, BX CABLING IS NOT ACCEPTABLE UNLESS OTHERWISE NOTED. BX CABLES MAY BE USED FOR FINAL CONNECTIONS TO LIGHTING FIXTURES OR EQUIPMENT WITH A MAXIMUM HORIZONTAL RUN LENGTH OF 3 FEET / 1 METER. PAINT CONDUITS TO MATCH ARCHITECTURAL BACKGROUNDS. MOUNT EXIT SIGNS, OCCUPANCY SENSORS, EXIT SIGNS, CAMERAS, WAPS AND ALL OTHER CEILING MOUNTED DEVICES WITH STEMS SUCH THAT THEY ARE ON THE SAME PLANE AS SUSPENDED LIGHTING FIXTURES. COORDINATE CEILINGS AND WALL HEIGHTS WITH INTERIOR DESIGNER DRAWINGS.
4. REUSE CIRCUITS OBTAINED THROUGH DEMOLITION IS ACCEPTABLE.
5. VERIFY EXACT POWER REQUIREMENTS AND RECEPTACLE TYPES FOR SPECIAL EQUIPMENT WITH MANUFACTURER PRIOR TO INSTALLATION. PROVIDE HARDWIRE CONNECTIONS FOR DISHWASHERS AND COPIERS ETC. IN LIEU OF RECEPTACLES OR VICE VERSA, AS REQUIRED.
6. REFER TO INTERIOR DESIGN/ARCHITECT DRAWINGS FOR THE COLOUR OF COVERPLATES AND MOUNTING HEIGHTS.
7. MARK UP OUTLET AND DEVICE LOCATIONS AND OBTAIN APPROVAL BY DESIGN CONSULTANT PRIOR TO INSTALLATION.
8. PROVIDE SUITABLE LABELS ON ALL RECEPTACLES AND SYSTEM FURNITURE FEEDS. LABELS TO INCLUDE BOTH PANEL AND CIRCUIT DESIGNATION. REVIEW LABEL SIZE AND TYPE WITH CONSULTANT PRIOR TO INSTALLATION.
9. TRACE ALL EXISTING OUTLETS, NOTED AS EXISTING, AND IDENTIFY ON AS BUILT DRAWING AS PER SPECIFICATION.
10. CONFIRM ELECTRICAL REQUIREMENTS AND EXACT LOCATION OF ALL MECHANICAL EQUIPMENT WITH MECHANICAL DRAWINGS AND CONTRACTOR PRIOR TO ROUGH-INS.
11. ROUTE ALL CONDUIT SYSTEMS AROUND DUCT WORK, BEAMS AND PIPING AS REQUIRED TO ACCOMMODATE LAYOUT SHOWN. REFER TO MECHANICAL DRAWINGS AND ARCHITECTURAL DRAWINGS FOR ADDITIONAL DETAILS.
12. COORDINATE ALL WORK TO SUIT PROJECT PHASE SCHEDULE. COORDINATE PHASING WITH ARCHITECT/INTERIOR DESIGN/GC DRAWINGS. PHASING IF SHOWN IS FOR REFERENCE PURPOSES ONLY.

UNIVERSITY OF TORONTO SCARBOROUGH

DESIGN & CONSTRUCTION MANAGEMENT
1265 Military Trail
Toronto Ontario
M1C 1A4

NO.	DATE	REVISION NO
1	2021-06-28	ISSUED FOR 85% PERMIT REVIEW
2	2021-07-05	ISSUED FOR PERMIT
3	2021-07-21	100% TENDER CHECK SET
4	2021-08-06	ISSUED FOR TENDER

PROJECT CONTACT

NAME: Ehsan Nagahi
TEL: 647 943 7643
EMAIL: ehsan.nagahi@smithandandersen.com

THIS DRAWING SHALL BE READ IN CONJUNCTION WITH ELECTRICAL SPECIFICATION SUBMITTED FOR THIS PROJECT.

STAMP:

CONSULTANT:

Smith + Andersen
1100 – 100 Sheppard Ave. East, Toronto On, M2N 6N5
416 487 8151 F 416 487 9104 smith+andersen.com

Notes:

All dimensions and information shall be checked and verified on the site and any discrepancies must be reported to the UofT Project Manager or the UofT Project Coordinator before commencing the work. Drawings are not to be scaled.

This drawing and all aspects of its content are protected by copyright. Reproduction in whole or in part, by any means whatsoever, whether electronic, mechanical or otherwise, without the expresses written permission of the University of Toronto Scarborough, is prohibited by law.

CLIENT:
LIBRARY/ INFO & INSTRUCTIONAL TECHNOLOGY SERVICES- UNIVERSITY OF TORONTO SCARBOROUGH
TORONTO ONTARIO, M1C1A4

PROJECT #:
03118.009

PROJECT TITLE:
LIBRARY / IITS INTERIOR RENOVATION - ARC BUILDING PHASE I

LIBRARY / IITS, 1265 MILITARY TRAIL

DRAWN BY: PH
CHECKED BY: EN/NC

DRAWING TITLE:
PHASE I - LEVEL 3 POWER AND SYSTEMS LAYOUT

DATE: 2021-04-20
SCALE: 1 : 100
DRAWING No: TE-3.2

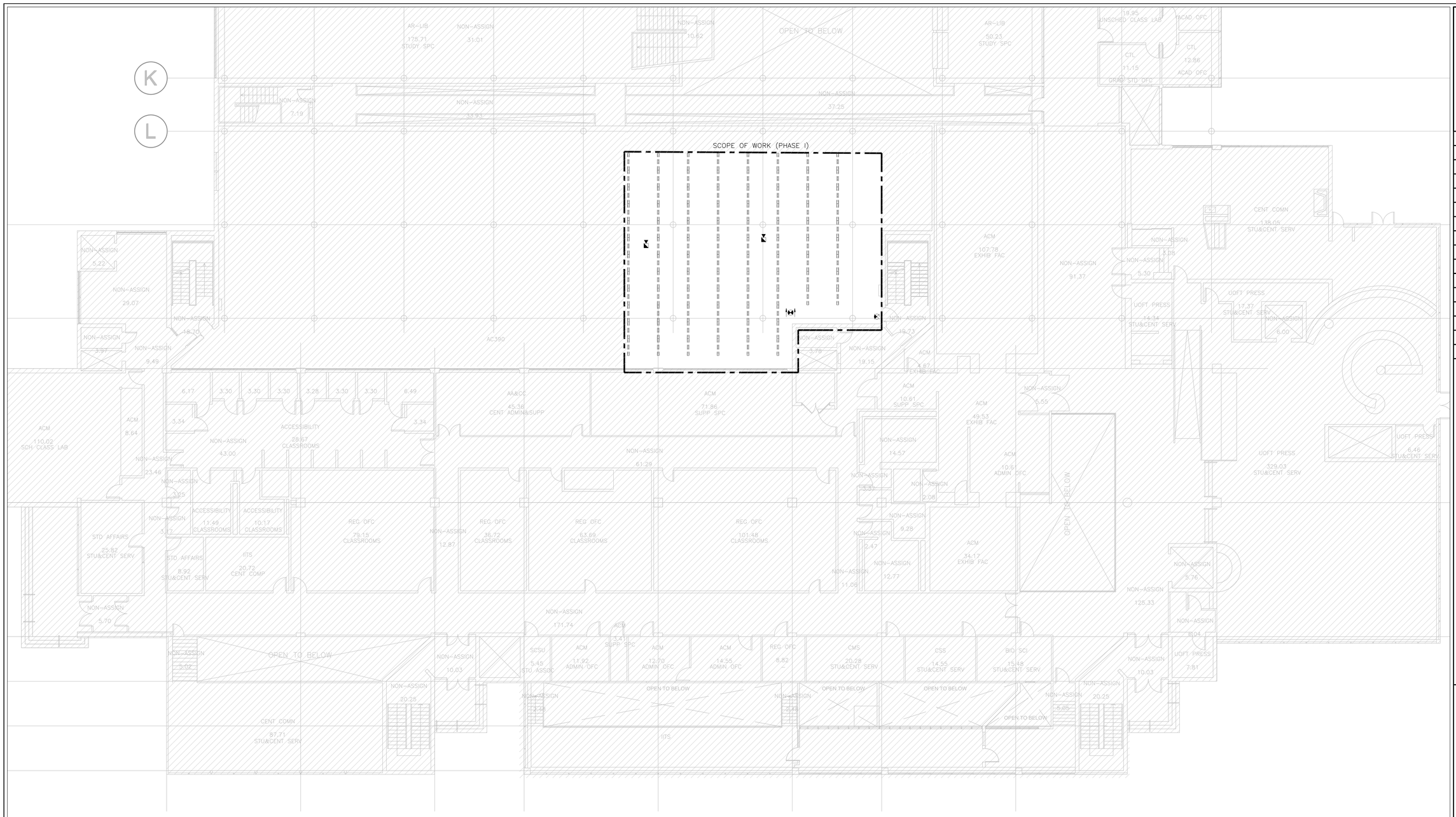

GENERAL NOTES:

1. REFER TO THE INTERIOR DESIGNER'S/ARCHITECT'S DRAWINGS TO DETERMINE COMPLETE EXTENT OF DEMOLITION AND ALLOW FOR ALL COSTS. COMPLETE EXTENT OF DEMOLITION IS NOT SHOWN.
2. MAKE GOOD ALL CORE HOLES FROM ELECTRICAL EQUIPMENT AND DEVICES DISCONNECTED, RELOCATED AND OR REMOVED IN THIS PROJECT.
3. ENSURE THAT ALL EXISTING ELECTRICAL DEVICES, EQUIPMENT AND LIGHTING WITHIN BASE BUILDING ROOMS, STAIRWELLS AND AREAS DEEMED NOT IN SCOPE, REMAIN LIVE OPERATIONAL, ISOLATED AND PROTECTED DURING CONSTRUCTION.
4. COORDINATE ALL WORK TO SUIT PROJECT PHASE SCHEDULE. COORDINATE PHASING WITH ARCHITECT/INTERIOR DESIGN/GC DRAWINGS. PHASING IF SHOWN IS FOR REFERENCE PURPOSES ONLY.
5. EXISTING CONDITIONS SHOWN ARE BASED ON DRAWINGS, FIELD SURVEY AND INFORMATION PROVIDED BY LANDLORD. ELECTRICAL CONTRACTOR TO FIELD VERIFY ALL EXISTING CONDITIONS PRIOR TO BIDDING. ANY DISCREPANCIES BETWEEN EXISTING CONDITIONS AND THOSE SHOWN HERE SHALL BE BROUGHT TO THE ATTENTION OF THE PROJECT MANAGER PRIOR TO BIDDING.
6. NO ADDITIONAL COST WILL BE APPROVED FOR ANY REVISIONS/MODIFICATIONS REQUIRED BY ANY TRADE OR CONTRACTOR DUE TO THE LACK OF COORDINATION BETWEEN TRADES AND CONTRACTORS.
7. COORDINATE WITH GENERAL CONTRACTOR AND LANDLORD FOR DISPOSAL OF ALL MATERIALS FROM SITE.
8. ELECTRICAL CONTRACTOR TO PROVIDE TEMPORARY LIGHTING FOR ENTIRE SPACE TO ACCOMMODATE DEMOLITION WORK AND FUTURE BUILD-OUT. ENSURE FIXTURES ARE CHAIN HUNG AND SUPPORTED FROM THE CEILING SLAB/STRUCTURE ABOVE.
9. EXISTING EXIT SIGNS SHALL BE MAINTAINED THROUGHOUT DEMOLITION CONSTRUCTION. PROVIDE TEMPORARY SUPPORT FROM THE CEILING SLAB/STRUCTURE ABOVE. NEW EXIT SIGNS SHALL BE PROVIDED AS PART OF NEW CONSTRUCTION PHASE.

UNIVERSITY OF TORONTO SCARBOROUGH

DESIGN & CONSTRUCTION MANAGEMENT
1265 Military Trail
Toronto Ontario
M1C 1A4

NO.	DATE	REVISION NO
1	2021-06-28	ISSUED FOR 85% PERMIT REVIEW
2	2021-07-05	ISSUED FOR PERMIT
3	2021-07-21	100% TENDER CHECK SET
4	2021-08-06	ISSUED FOR TENDER

PROJECT CONTACT

NAME: Ehsan Nagahi
TEL: 647 943 7643
EMAIL: ehsan.nagahi@smithandandersen.com

THIS DRAWING SHALL BE READ IN CONJUNCTION WITH ELECTRICAL SPECIFICATION SUBMITTED FOR THIS PROJECT.

STAMP:

CONSULTANT:

Smith + Andersen
1100 – 100 Sheppard Ave. East, Toronto On, M2N 6N5
416 487 8151 F 416 487 9104 smithandandersen.com

Notes:

All dimensions and information shall be checked and verified on the site and any discrepancies must be reported to the UofT Project Manager or the UofT Project Coordinator before commencing the work. Drawings are not to be scaled.

This drawing and all aspects of its content are protected by copyright. Reproduction in whole or in part, by any means whatsoever, whether electronic, mechanical or otherwise, without the expresses written permission of the University of Toronto Scarborough, is prohibited by law.

CLIENT:
LIBRARY/ INFO & INSTRUCTIONAL TECHNOLOGY SERVICES- UNIVERSITY OF TORONTO SCARBOROUGH
TORONTO ONTARIO, M1C1A4

PROJECT #:
03118.009

PROJECT TITLE:
LIBRARY / IITS INTERIOR RENOVATION - ARC BUILDING PHASE I

LIBRARY / IITS, 1265 MILITARY TRAIL

DRAWN BY: PH
CHECKED BY: EN/NC

DRAWING TITLE:
PHASE I - LEVEL 3 LIGHTING AND FIRE ALARM DEMOLITION LAYOUT

DATE: 2021-04-20
SCALE: 1 : 100
DRAWING No: TE-3.3

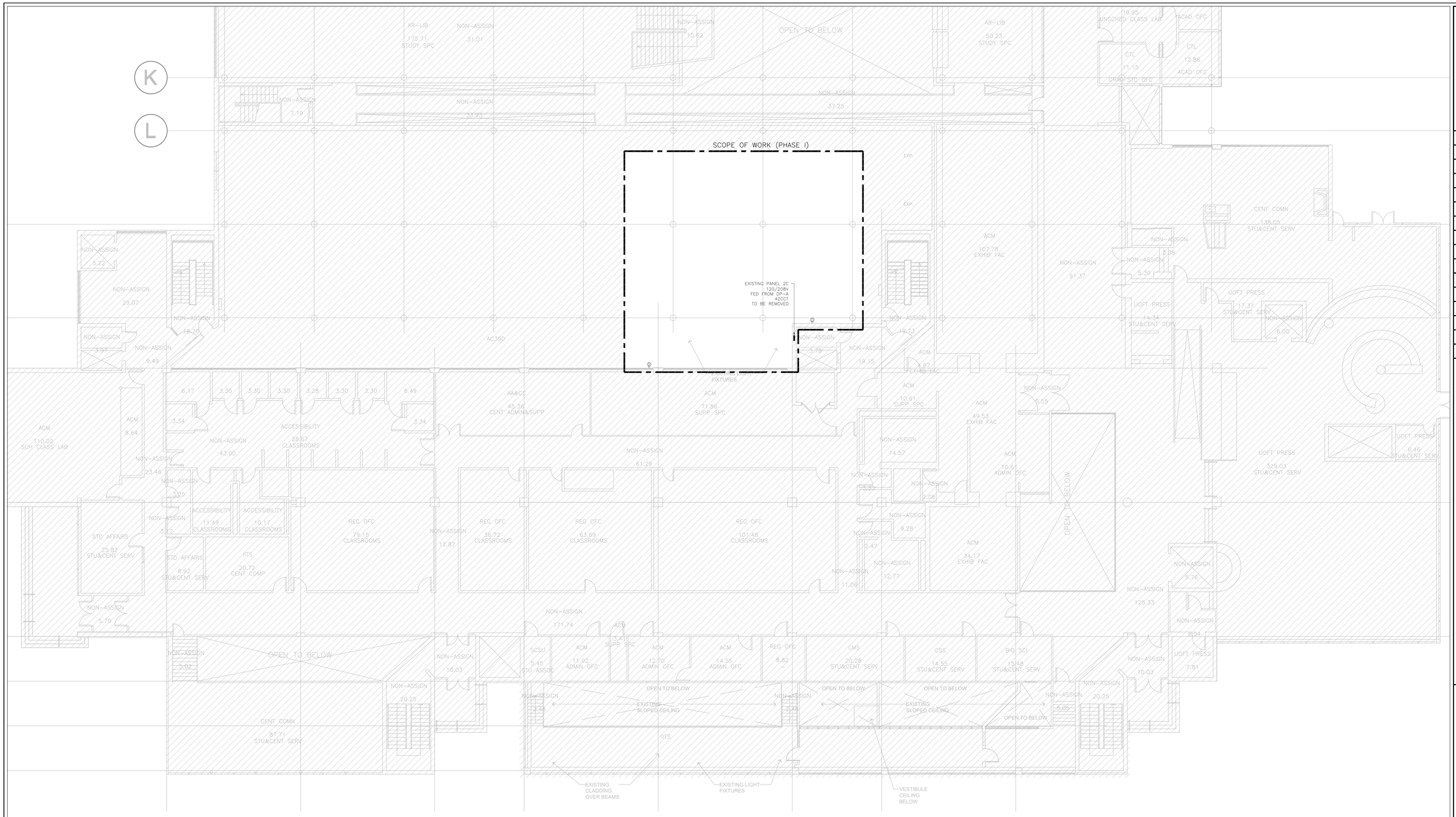

GENERAL NOTES:

1. REFER TO THE INTERIOR DESIGNER'S/ARCHITECT'S DRAWINGS TO DETERMINE COMPLETE EXTENT OF DEMOLITION AND ALLOW FOR ALL COSTS. COMPLETE EXTENT OF DEMOLITION IS NOT SHOWN.
2. REMOVE ALL FLOOR, COLUMN, CEILING, AND WALL MOUNTED POWER, TELEPHONE/DATA OUTLETS, CABLING AND CONDUIT NOT REQUIRED, TO SUIT NEW LAYOUT AND MAKE SAFE. VISIT SITE TO DETERMINE EXACT REQUIREMENTS AND REFER TO DEMOLITION DRAWINGS.
3. MAKE GOOD ALL CORE HOLES FROM ELECTRICAL EQUIPMENT AND DEVICES DISCONNECTED, RELOCATED AND OR REMOVED IN THIS PROJECT.
4. REMOVE FLOOR MONUMENT(S) AND ALL ASSOCIATED CONDUIT(S) AND WIRE BACK TO SOURCE. MAKE GOOD ALL FLOOR PENETRATIONS TO COMPLY WITH CURRENT LOCAL APPLICABLE CODES.
5. ENSURE THAT ALL EXISTING ELECTRICAL DEVICES, EQUIPMENT AND LIGHTING WITHIN BASE BUILDING ROOMS, STAIRWELLS AND AREAS DEEMED NOT IN SCOPE, REMAIN LIVE OPERATIONAL, ISOLATED AND PROTECTED DURING CONSTRUCTION.
6. COORDINATE ALL WORK TO SUIT PROJECT PHASE SCHEDULE. COORDINATE PHASING WITH ARCHITECT/INTERIOR DESIGN/GC DRAWINGS. PHASING IF SHOWN IS FOR REFERENCE PURPOSES ONLY.
7. EXISTING CONDITIONS SHOWN ARE BASED ON DRAWINGS, FIELD SURVEY AND INFORMATION PROVIDED BY LANDLORD. ELECTRICAL CONTRACTOR TO FIELD VERIFY ALL EXISTING CONDITIONS PRIOR TO BIDDING. ANY DISCREPANCIES BETWEEN EXISTING CONDITIONS AND THOSE SHOWN HERE SHALL BE BROUGHT TO THE ATTENTION OF THE PROJECT MANAGER PRIOR TO BIDDING.
8. NO ADDITIONAL COST WILL BE APPROVED FOR ANY REVISIONS/MODIFICATIONS REQUIRED BY ANY TRADE OR CONTRACTOR DUE TO THE LACK OF COORDINATION BETWEEN TRADES AND CONTRACTORS.
9. COORDINATE WITH GENERAL CONTRACTOR AND LANDLORD FOR DISPOSAL OF ALL MATERIALS FROM SITE.
10. EXISTING FIRE ALARM DEVICES SHALL BE COILED AND FULLY FUNCTIONAL THROUGHOUT DEMOLITION CONSTRUCTION. NEW FIRE ALARM DEVICES SHALL BE PROVIDED AS PART OF NEW CONSTRUCTION PHASE. REFER TO PHASING SCHEDULE FOR CONSTRUCTION SCHEDULING.

UNIVERSITY OF TORONTO SCARBOROUGH

DESIGN & CONSTRUCTION MANAGEMENT
1265 Military Trail
Toronto Ontario
M1C 1A4

NO.	DATE	REVISION NO
1	2021-06-28	ISSUED FOR 85% PERMIT REVIEW
2	2021-07-05	ISSUED FOR PERMIT
3	2021-07-21	100% TENDER CHECK SET
4	2021-08-06	ISSUED FOR TENDER

PROJECT CONTACT

NAME: Ehsan Nagahi
TEL: 647 943 7643
EMAIL: ehsan.nagahi@smithandandersen.com

THIS DRAWING SHALL BE READ IN CONJUNCTION WITH ELECTRICAL SPECIFICATION SUBMITTED FOR THIS PROJECT.

STAMP:

CONSULTANT:

Smith + Andersen
1100 – 100 Sheppard Ave. East, Toronto On, M2N 6N5
416 487 8151 F 416 487 9104 smithandandersen.com

Notes:

All dimensions and information shall be checked and verified on the site and any discrepancies must be reported to the UofT Project Manager or the UofT Project Coordinator before commencing the work. Drawings are not to be scaled.

This drawing and all aspects of its content are protected by copyright. Reproduction in whole or in part, by any means whatsoever, whether electronic, mechanical or otherwise, without the expresses written permission of the University of Toronto Scarborough, is prohibited by law.

CLIENT:
LIBRARY/ INFO & INSTRUCTIONAL TECHNOLOGY SERVICES- UNIVERSITY OF TORONTO SCARBOROUGH
TORONTO ONTARIO, M1C1A4

PROJECT #:
03118.009

PROJECT TITLE:
LIBRARY / IITS INTERIOR RENOVATION - ARC BUILDING PHASE I

LIBRARY / IITS, 1265 MILITARY TRAIL

DRAWN BY: PH
CHECKED BY: EN/NC

DRAWING TITLE:
PHASE I - LEVEL 3 POWER AND SYSTEMS DEMOLITION LAYOUT

DATE: 2021-04-20
SCALE: 1 : 100
DRAWING No: TE-3.4