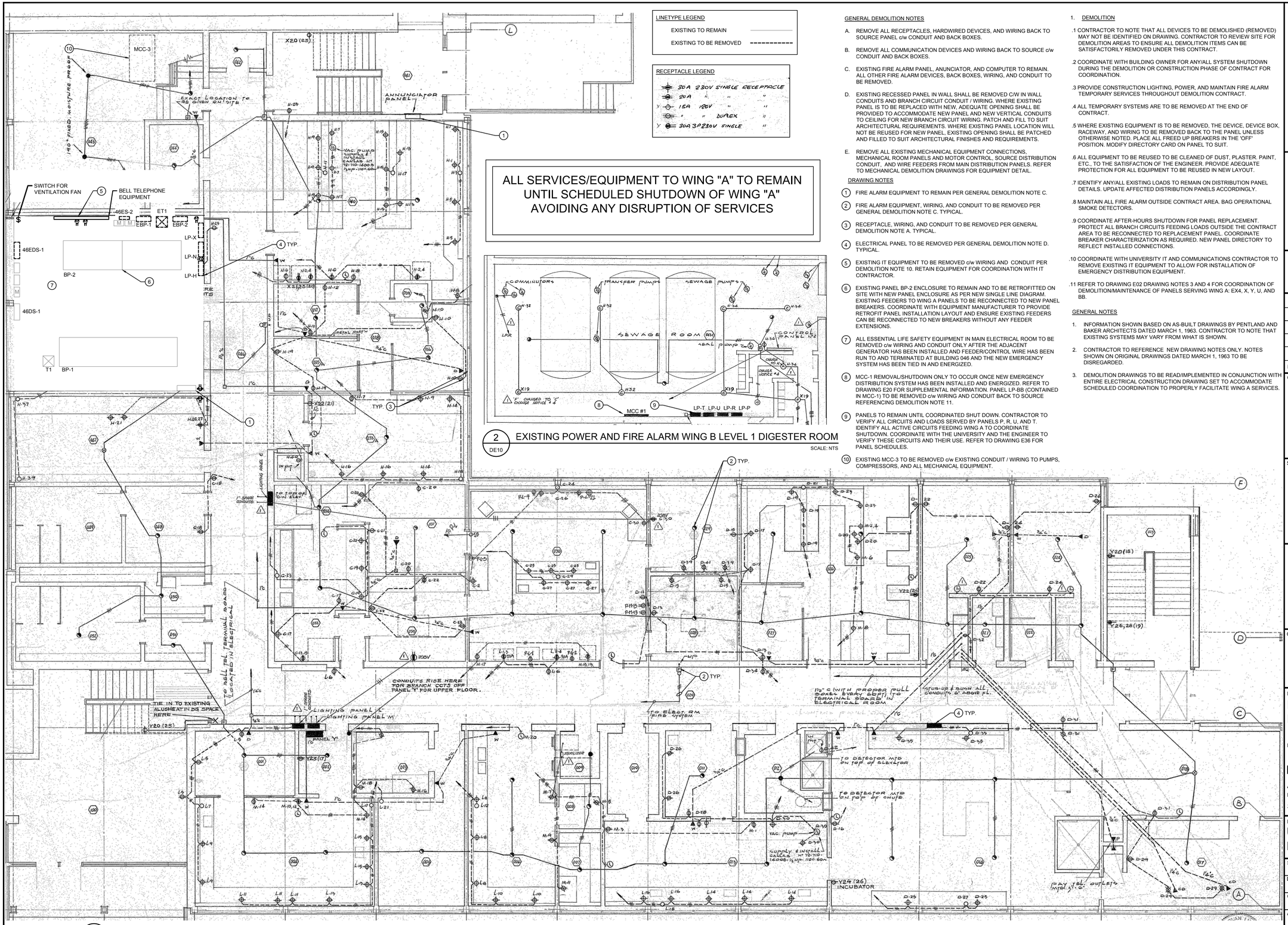

1 DE10 EXISTING POWER AND FIRE ALARM WING B LEVEL 1

SCALE: NTS

LINETYPE LEGEND

EXISTING TO REMAIN

EXISTING TO BE REMOVED

RECEPTACLE LEGEND

- 30A 230V SINGLE RECEPTACLE
- 20A " " "
- Y 15A 120V " "
- " " DUPLEX "
- Y 30A 3P 230V SINGLE "

ALL SERVICES/EQUIPMENT TO WING "A" TO REMAIN UNTIL SCHEDULED SHUTDOWN OF WING "A" AVOIDING ANY DISRUPTION OF SERVICES

2 DE10 EXISTING POWER AND FIRE ALARM WING B LEVEL 1 DIGESTER ROOM

SCALE: NTS

GENERAL DEMOLITION NOTES

A. REMOVE ALL RECEPTACLES, HARDWIRED DEVICES, AND WIRING BACK TO SOURCE PANEL c/w CONDUIT AND BACK BOXES.

B. REMOVE ALL COMMUNICATION DEVICES AND WIRING BACK TO SOURCE c/w CONDUIT AND BACK BOXES.

C. EXISTING FIRE ALARM PANEL, ANUNCIATOR, AND COMPUTER TO REMAIN. ALL OTHER FIRE ALARM DEVICES, BACK BOXES, WIRING, AND CONDUIT TO BE REMOVED.

D. EXISTING RECESSED PANEL IN WALL SHALL BE REMOVED C/W IN WALL CONDUITS AND BRANCH CIRCUIT CONDUIT / WIRING. WHERE EXISTING PANEL IS TO BE REPLACED WITH NEW, ADEQUATE OPENING SHALL BE PROVIDED TO ACCOMMODATE NEW PANEL AND NEW VERTICAL CONDUITS TO CEILING FOR NEW BRANCH CIRCUIT WIRING. PATCH AND FILL TO SUIT ARCHITECTURAL REQUIREMENTS. WHERE EXISTING PANEL LOCATION WILL NOT BE REUSED FOR NEW PANEL, EXISTING OPENING SHALL BE PATCHED AND FILLED TO SUIT ARCHITECTURAL FINISHES AND REQUIREMENTS.

E. REMOVE ALL EXISTING MECHANICAL EQUIPMENT CONNECTIONS, MECHANICAL ROOM PANELS AND MOTOR CONTROL, SOURCE DISTRIBUTION CONDUIT, AND WIRE FEEDERS FROM MAIN DISTRIBUTION PANELS. REFER TO MECHANICAL DEMOLITION DRAWINGS FOR EQUIPMENT DETAIL.

DRAWING NOTES

1. FIRE ALARM EQUIPMENT TO REMAIN PER GENERAL DEMOLITION NOTE C.
2. FIRE ALARM EQUIPMENT, WIRING, AND CONDUIT TO BE REMOVED PER GENERAL DEMOLITION NOTE C. TYPICAL.
3. RECEPTACLE, WIRING, AND CONDUIT TO BE REMOVED PER GENERAL DEMOLITION NOTE A. TYPICAL.
4. ELECTRICAL PANEL TO BE REMOVED PER GENERAL DEMOLITION NOTE D. TYPICAL.
5. EXISTING IT EQUIPMENT TO BE REMOVED c/w WIRING AND CONDUIT PER DEMOLITION NOTE 10. RETAIN EQUIPMENT FOR COORDINATION WITH IT CONTRACTOR.
6. EXISTING PANEL BP-2 ENCLOSURE TO REMAIN AND TO BE RETROFITTED ON SITE WITH NEW PANEL ENCLOSURE AS PER NEW SINGLE LINE DIAGRAM. EXISTING FEEDERS TO WING A PANELS TO BE RECONNECTED TO NEW PANEL BREAKERS. COORDINATE WITH EQUIPMENT MANUFACTURER TO PROVIDE RETROFIT PANEL INSTALLATION LAYOUT AND ENSURE EXISTING FEEDERS CAN BE RECONNECTED TO NEW BREAKERS WITHOUT ANY FEEDER EXTENSIONS.
7. ALL ESSENTIAL LIFE SAFETY EQUIPMENT IN MAIN ELECTRICAL ROOM TO BE REMOVED c/w WIRING AND CONDUIT ONLY AFTER THE ADJACENT GENERATOR HAS BEEN INSTALLED AND FEEDER/CONTROL WIRE HAS BEEN RUN TO AND TERMINATED AT BUILDING 046 AND THE NEW EMERGENCY SYSTEM HAS BEEN TIED IN AND ENERGIZED.
8. MCC-1 REMOVAL/SHUTDOWN ONLY TO OCCUR ONCE NEW EMERGENCY DISTRIBUTION SYSTEM HAS BEEN INSTALLED AND ENERGIZED. REFER TO DRAWING E20 FOR SUPPLEMENTAL INFORMATION. PANEL LP-BB (CONTAINED IN MCC-1) TO BE REMOVED c/w WIRING AND CONDUIT BACK TO SOURCE REFERENCING DEMOLITION NOTE 11.
9. PANELS TO REMAIN UNTIL COORDINATED SHUT DOWN. CONTRACTOR TO VERIFY ALL CIRCUITS AND LOADS SERVED BY PANELS P, R, U, AND T. IDENTIFY ALL ACTIVE CIRCUITS FEEDING WING A TO COORDINATE SHUTDOWN. COORDINATE WITH THE UNIVERSITY AND THE ENGINEER TO VERIFY THESE CIRCUITS AND THEIR USE. REFER TO DRAWING E36 FOR PANEL SCHEDULES.
10. EXISTING MCC-3 TO BE REMOVED c/w EXISTING CONDUIT / WIRING TO PUMPS, COMPRESSORS, AND ALL MECHANICAL EQUIPMENT.

1. DEMOLITION

.1 CONTRACTOR TO NOTE THAT ALL DEVICES TO BE DEMOLISHED (REMOVED) MAY NOT BE IDENTIFIED ON DRAWING. CONTRACTOR TO REVIEW SITE FOR DEMOLITION AREAS TO ENSURE ALL DEMOLITION ITEMS CAN BE SATISFACTORILY REMOVED UNDER THIS CONTRACT.

.2 COORDINATE WITH BUILDING OWNER FOR ANY/ALL SYSTEM SHUTDOWN DURING THE DEMOLITION OR CONSTRUCTION PHASE OF CONTRACT FOR COORDINATION.

.3 PROVIDE CONSTRUCTION LIGHTING, POWER, AND MAINTAIN FIRE ALARM TEMPORARY SERVICES THROUGHOUT DEMOLITION CONTRACT.

.4 ALL TEMPORARY SYSTEMS ARE TO BE REMOVED AT THE END OF CONTRACT.

.5 WHERE EXISTING EQUIPMENT IS TO BE REMOVED, THE DEVICE, DEVICE BOX, RACEWAY, AND WIRING TO BE REMOVED BACK TO THE PANEL UNLESS OTHERWISE NOTED. PLACE ALL FREED UP BREAKERS IN THE 'OFF' POSITION. MODIFY DIRECTORY CARD ON PANEL TO SUIT.

.6 ALL EQUIPMENT TO BE REUSED TO BE CLEANED OF DUST, PLASTER. PAINT, ETC., TO THE SATISFACTION OF THE ENGINEER. PROVIDE ADEQUATE PROTECTION FOR ALL EQUIPMENT TO BE REUSED IN NEW LAYOUT.

.7 IDENTIFY ANY/ALL EXISTING LOADS TO REMAIN ON DISTRIBUTION PANEL DETAILS. UPDATE AFFECTED DISTRIBUTION PANELS ACCORDINGLY.

.8 MAINTAIN ALL FIRE ALARM OUTSIDE CONTRACT AREA. BAG OPERATIONAL SMOKE DETECTORS.

.9 COORDINATE AFTER-HOURS SHUTDOWN FOR PANEL REPLACEMENT. PROTECT ALL BRANCH CIRCUITS FEEDING LOADS OUTSIDE THE CONTRACT AREA TO BE RECONNECTED TO REPLACEMENT PANEL. COORDINATE BREAKER CHARACTERIZATION AS REQUIRED. NEW PANEL DIRECTORY TO REFLECT INSTALLED CONNECTIONS.

.10 COORDINATE WITH UNIVERSITY IT AND COMMUNICATIONS CONTRACTOR TO REMOVE EXISTING IT EQUIPMENT TO ALLOW FOR INSTALLATION OF EMERGENCY DISTRIBUTION EQUIPMENT.

.11 REFER TO DRAWING E02 DRAWING NOTES 3 AND 4 FOR COORDINATION OF DEMOLITION/MAINTENANCE OF PANELS SERVING WING A: EX4, X, Y, U, AND BB.

GENERAL NOTES

1. INFORMATION SHOWN BASED ON AS-BUILT DRAWINGS BY PENTLAND AND BAKER ARCHITECTS DATED MARCH 1, 1963. CONTRACTOR TO NOTE THAT EXISTING SYSTEMS MAY VARY FROM WHAT IS SHOWN.
2. CONTRACTOR TO REFERENCE NEW DRAWING NOTES ONLY. NOTES SHOWN ON ORIGINAL DRAWINGS DATED MARCH 1, 1963 TO BE DISREGARDED.
3. DEMOLITION DRAWINGS TO BE READ/IMPLEMENTED IN CONJUNCTION WITH ENTIRE ELECTRICAL CONSTRUCTION DRAWING SET TO ACCOMMODATE SCHEDULED COORDINATION TO PROPERLY FACILITATE WING A SERVICES.

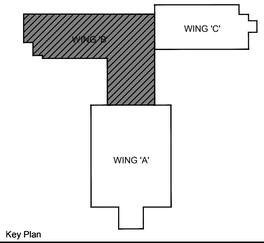

Key Plan

DO NOT SCALE DRAWINGS:

Contractors must check and verify all site conditions. Notify the Owner's Representative in writing before proceeding with the work if discrepancies are evident between the drawings and the site condition. No extras to the contract will be allowed if discrepancies were evident prior to start of work.

UNEXPECTED DISCOVERY OF ASBESTOS:

Where a friable material is discovered during construction, renovations and/or demolition, and it is suspected to contain asbestos, the Contractor must stop all work that may disturb the material. The Contractor shall advise the Owner of the discovery and await instructions from the owner.

A = Detail number

B = Drawing number where detailed

NO.	ISSUED	BY	DATE
1	ISSUED FOR CONVENIENCE	TA	APR 12, 2019
0	ISSUED FOR PERMIT & TENDER	TA	NOV 2, 2018

Orientation

Seal

Seal

UNIVERSITY of GUELPH

Design, Engineering & Construction
Physical Resources
Guelph, Ontario. N1G 2W1

Consultant

www.jlrichards.ca

J.L.Richards
ENGINEERS · ARCHITECTS · PLANNERS

Project

BUILDING #046
RENOVATIONS

Drawing Title

ELECTRICAL
EXISTING POWER AND FIRE ALARM WING B LEVEL 1

Project No.

504034

Location

UNIVERSITY OF GUELPH
BUILDING #46

Scale NTS	Date APR 12, 2019
Drawn by AM	Drawing No.
Checked By HM	DE10
Approved By HM	
JLR # 27915	

Cad File No. ----

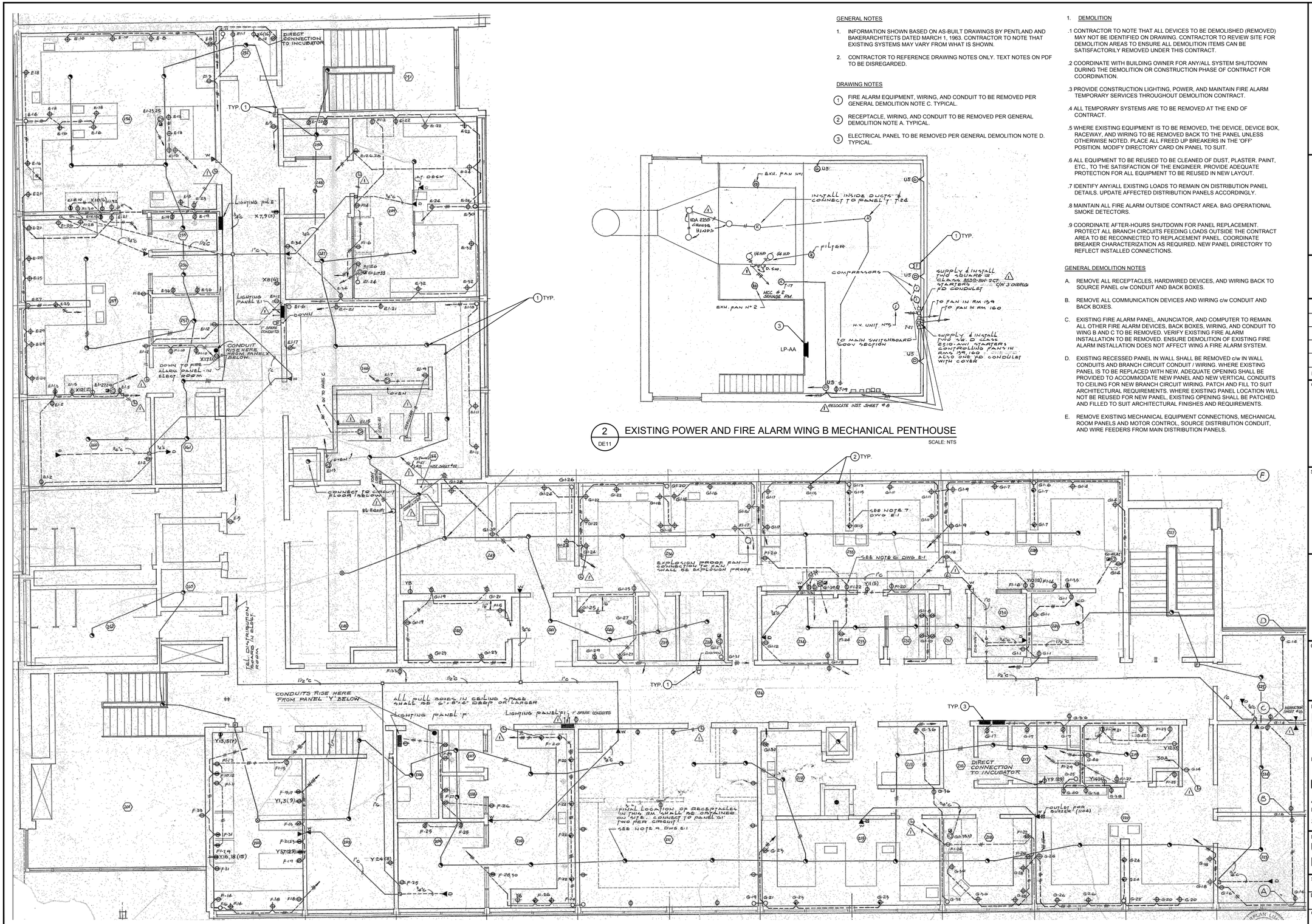

1 DE11 EXISTING POWER AND FIRE ALARM WING B LEVEL 2

SCALE: NTS

2 DE11 EXISTING POWER AND FIRE ALARM WING B MECHANICAL PENTHOUSE

SCALE: NTS

GENERAL NOTES

1. INFORMATION SHOWN BASED ON AS-BUILT DRAWINGS BY PENTLAND AND BAKERARCHITECTS DATED MARCH 1, 1963. CONTRACTOR TO NOTE THAT EXISTING SYSTEMS MAY VARY FROM WHAT IS SHOWN.
2. CONTRACTOR TO REFERENCE DRAWING NOTES ONLY. TEXT NOTES ON PDF TO BE DISREGARDED.

DRAWING NOTES

1. FIRE ALARM EQUIPMENT, WIRING, AND CONDUIT TO BE REMOVED PER GENERAL DEMOLITION NOTE C. TYPICAL.
2. RECEPTACLE, WIRING, AND CONDUIT TO BE REMOVED PER GENERAL DEMOLITION NOTE A. TYPICAL.
3. ELECTRICAL PANEL TO BE REMOVED PER GENERAL DEMOLITION NOTE D. TYPICAL.

1. DEMOLITION

.1 CONTRACTOR TO NOTE THAT ALL DEVICES TO BE DEMOLISHED (REMOVED) MAY NOT BE IDENTIFIED ON DRAWING. CONTRACTOR TO REVIEW SITE FOR DEMOLITION AREAS TO ENSURE ALL DEMOLITION ITEMS CAN BE SATISFACTORILY REMOVED UNDER THIS CONTRACT.

.2 COORDINATE WITH BUILDING OWNER FOR ANY/ALL SYSTEM SHUTDOWN DURING THE DEMOLITION OR CONSTRUCTION PHASE OF CONTRACT FOR COORDINATION.

.3 PROVIDE CONSTRUCTION LIGHTING, POWER, AND MAINTAIN FIRE ALARM TEMPORARY SERVICES THROUGHOUT DEMOLITION CONTRACT.

.4 ALL TEMPORARY SYSTEMS ARE TO BE REMOVED AT THE END OF CONTRACT.

.5 WHERE EXISTING EQUIPMENT IS TO BE REMOVED, THE DEVICE, DEVICE BOX, RACEWAY, AND WIRING TO BE REMOVED BACK TO THE PANEL UNLESS OTHERWISE NOTED. PLACE ALL FREED UP BREAKERS IN THE 'OFF' POSITION. MODIFY DIRECTORY CARD ON PANEL TO SUIT.

.6 ALL EQUIPMENT TO BE REUSED TO BE CLEANED OF DUST, PLASTER. PAINT, ETC., TO THE SATISFACTION OF THE ENGINEER. PROVIDE ADEQUATE PROTECTION FOR ALL EQUIPMENT TO BE REUSED IN NEW LAYOUT.

.7 IDENTIFY ANY/ALL EXISTING LOADS TO REMAIN ON DISTRIBUTION PANEL DETAILS. UPDATE AFFECTED DISTRIBUTION PANELS ACCORDINGLY.

.8 MAINTAIN ALL FIRE ALARM OUTSIDE CONTRACT AREA. BAG OPERATIONAL SMOKE DETECTORS.

.9 COORDINATE AFTER-HOURS SHUTDOWN FOR PANEL REPLACEMENT. PROTECT ALL BRANCH CIRCUITS FEEDING LOADS OUTSIDE THE CONTRACT AREA TO BE RECONNECTED TO REPLACEMENT PANEL. COORDINATE BREAKER CHARACTERIZATION AS REQUIRED. NEW PANEL DIRECTORY TO REFLECT INSTALLED CONNECTIONS.

GENERAL DEMOLITION NOTES

A. REMOVE ALL RECEPTACLES, HARDWIRED DEVICES, AND WIRING BACK TO SOURCE PANEL c/w CONDUIT AND BACK BOXES.

B. REMOVE ALL COMMUNICATION DEVICES AND WIRING c/w CONDUIT AND BACK BOXES.

C. EXISTING FIRE ALARM PANEL, ANUNCIATOR, AND COMPUTER TO REMAIN. ALL OTHER FIRE ALARM DEVICES, BACK BOXES, WIRING, AND CONDUIT TO WING B AND C TO BE REMOVED. VERIFY EXISTING FIRE ALARM INSTALLATION TO BE REMOVED. ENSURE DEMOLITION OF EXISTING FIRE ALARM INSTALLATION DOES NOT AFFECT WING A FIRE ALARM SYSTEM.

D. EXISTING RECESSED PANEL IN WALL SHALL BE REMOVED c/w IN WALL CONDUITS AND BRANCH CIRCUIT CONDUIT / WIRING. WHERE EXISTING PANEL IS TO BE REPLACED WITH NEW, ADEQUATE OPENING SHALL BE PROVIDED TO ACCOMMODATE NEW PANEL AND NEW VERTICAL CONDUITS TO CEILING FOR NEW BRANCH CIRCUIT WIRING. PATCH AND FILL TO SUIT ARCHITECTURAL REQUIREMENTS. WHERE EXISTING PANEL LOCATION WILL NOT BE REUSED FOR NEW PANEL, EXISTING OPENING SHALL BE PATCHED AND FILLED TO SUIT ARCHITECTURAL FINISHES AND REQUIREMENTS.

E. REMOVE EXISTING MECHANICAL EQUIPMENT CONNECTIONS, MECHANICAL ROOM PANELS AND MOTOR CONTROL, SOURCE DISTRIBUTION CONDUIT, AND WIRE FEEDERS FROM MAIN DISTRIBUTION PANELS.

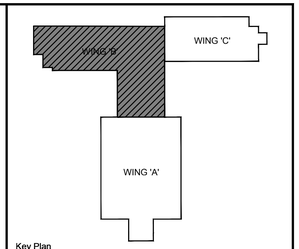

Key Plan

DO NOT SCALE DRAWINGS:

Contractors must check and verify all site conditions. Notify the Owner's Representative in writing before proceeding with the work if discrepancies are evident between the drawings and the site condition. No extras to the contract will be allowed if discrepancies were evident prior to start of work.

UNEXPECTED DISCOVERY OF ASBESTOS:

Where a friable material is discovered during construction, renovations and/or demolition, and it is suspected to contain asbestos, the Contractor must stop all work that may disturb the material. The Contractor shall advise the Owner of the discovery and await instructions from the owner.

A = Detail number

B = Drawing number where detailed

NO.	ISSUED	BY	DATE
1	ISSUED FOR CONVENIENCE	TA	APR 12, 2019
0	ISSUED FOR PERMIT & TENDER	TA	NOV 2, 2018

Orientation

Seal

Seal

UNIVERSITY of GUELPH

Design, Engineering & Construction
Physical Resources
Guelph, Ontario. N1G 2W1

Consultant

www.jlrichards.ca

J.L.Richards
ENGINEERS · ARCHITECTS · PLANNERS

Project
BUILDING #046
RENOVATIONS

Drawing Title
ELECTRICAL
EXISTING POWER AND FIRE ALARM WING B LEVEL 2

Project No.
504034

Location
UNIVERSITY OF GUELPH
BUILDING #46

Scale NTS	Date APR 12, 2019
Drawn by AM	Drawing No.
Checked By HM	DE11
Approved By HM	
JLR # 27915	

Cad File No. ----

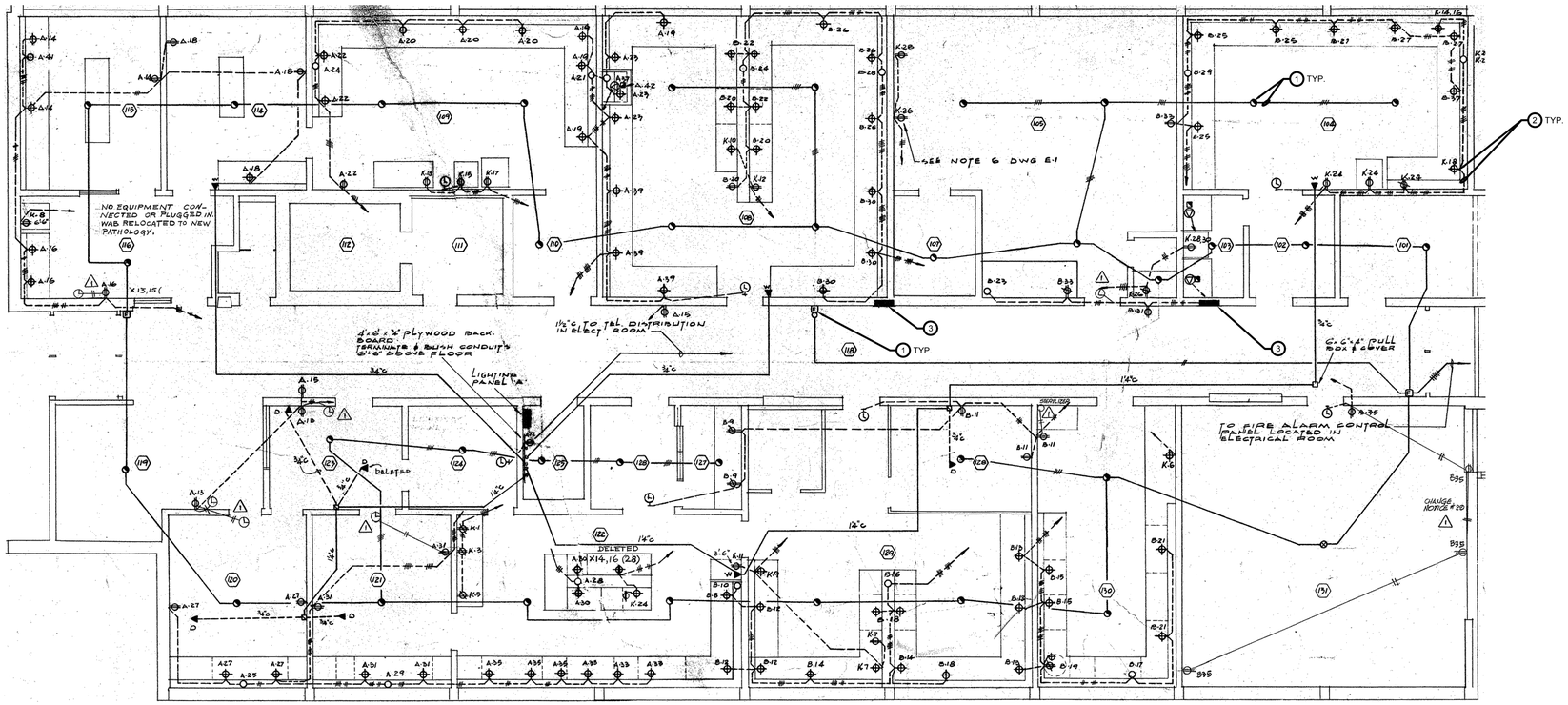

1 DE12 EXISTING POWER AND FIRE ALARM SYSTEMS WING C

SCALE: NTS

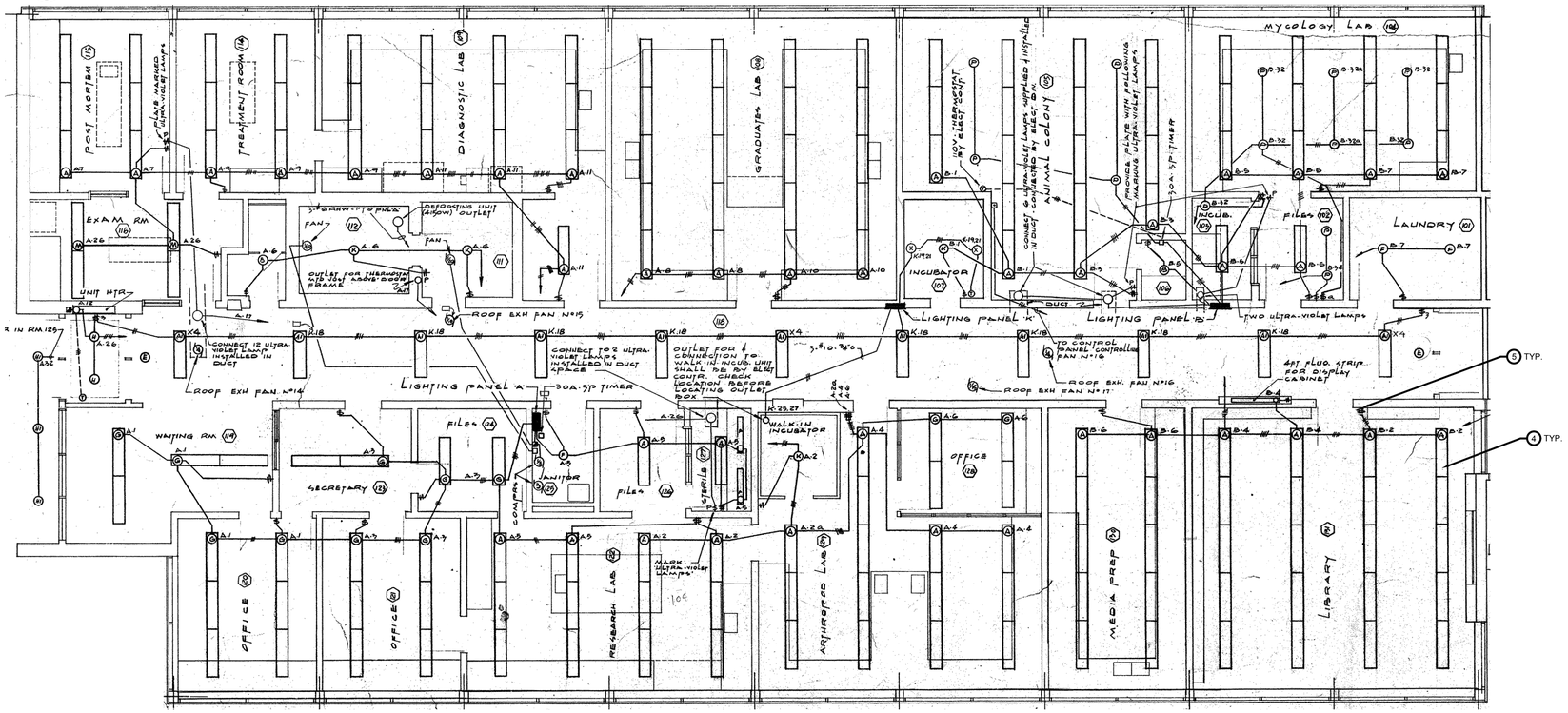

1 DE12 EXISTING LIGHTING LAYOUT WING C

SCALE: NTS

RECEPTACLE LEGEND

- 30A 230V SINGLE RECEPTACLE
- 20A " " "
- Y 15A 120V " "
- " " DUPLEX "
- Y 30A 3P 230V SINGLE "

GENERAL NOTES

1. INFORMATION SHOWN BASED ON AS-BUILT DRAWINGS BY PENTLAND AND BAKERARCHITECTS DATED MARCH 1, 1963. CONTRACTOR TO NOTE THAT EXISTING SYSTEMS MAY VARY FROM WHAT IS SHOWN.
2. CONTRACTOR TO REFERENCE DRAWING NOTES ONLY. TEXT NOTES ON PDF TO BE DISREGARDED.
3. DEMOLITION DRAWINGS TO BE READ/IMPLEMENTED IN CONJUNCTION WITH ENTIRE ELECTRICAL CONSTRUCTION DRAWING SET TO ACCOMMODATE SCHEDULED COORDINATION TO PROPERLY FACILITATE WING A SERVICES.

1. DEMOLITION

.1 CONTRACTOR TO NOTE THAT ALL DEVICES TO BE DEMOLISHED (REMOVED) MAY NOT BE IDENTIFIED ON DRAWING. CONTRACTOR TO REVIEW SITE FOR DEMOLITION AREAS TO ENSURE ALL DEMOLITION ITEMS CAN BE SATISFACTORILY REMOVED UNDER THIS CONTRACT.

.2 COORDINATE WITH BUILDING OWNER FOR ANY/ALL SYSTEM SHUTDOWN DURING THE DEMOLITION OR CONSTRUCTION PHASE OF CONTRACT FOR COORDINATION.

.3 PROVIDE CONSTRUCTION LIGHTING, POWER, AND MAINTAIN FIRE ALARM TEMPORARY SERVICES THROUGHOUT DEMOLITION CONTRACT.

.4 ALL TEMPORARY SYSTEMS ARE TO BE REMOVED AT THE END OF CONTRACT.

.5 WHERE EXISTING EQUIPMENT IS TO BE REMOVED, THE DEVICE, DEVICE BOX, RACEWAY, AND WIRING TO BE REMOVED BACK TO THE PANEL UNLESS OTHERWISE NOTED. PLACE ALL FREED UP BREAKERS IN THE 'OFF' POSITION. MODIFY DIRECTORY CARD ON PANEL TO SUIT.

.6 ALL EQUIPMENT TO BE REUSED TO BE CLEANED OF DUST, PLASTER. PAINT, ETC., TO THE SATISFACTION OF THE ENGINEER. PROVIDE ADEQUATE PROTECTION FOR ALL EQUIPMENT TO BE REUSED IN NEW LAYOUT.

.7 IDENTIFY ANY/ALL EXISTING LOADS TO REMAIN ON DISTRIBUTION PANEL DETAILS. UPDATE AFFECTED DISTRIBUTION PANELS ACCORDINGLY.

.8 MAINTAIN ALL FIRE ALARM OUTSIDE CONTRACT AREA. BAG OPERATIONAL SMOKE DETECTORS.

.9 COORDINATE AFTER-HOURS SHUTDOWN FOR PANEL REPLACEMENT. PROTECT ALL BRANCH CIRCUITS FEEDING LOADS OUTSIDE THE CONTRACT AREA TO BE RECONNECTED TO REPLACEMENT PANEL. COORDINATE BREAKER CHARACTERIZATION AS REQUIRED. NEW PANEL DIRECTORY TO REFLECT INSTALLED CONNECTIONS.

.10 ALL LOW VOLTAGE CABLING FOR SECURITY, VOICE, DATA AND OTHER SYSTEMS TO BE PHOTOGRAPHED AND INVENTORIED BY THE CONTRACTOR. INVENTORY TO INCLUDE LIST OF ANY END DEVICES TO REMAIN. THIS INFORMATION IS TO BE PROVIDED TO THE CONSULTANT FOR REVIEW.

.11 CONTRACTOR TO IDENTIFY ALL CABLING THAT IS CURRENTLY ACTIVE. ACTIVE CABLING TO BE TAGGED AND PULLED BACK BEYOND THE PERIMETER OF THE DEMOLITION AREA FOR REINSTATEMENT FOLLOWING DEMOLITION.

.12 CONTRACTOR TO REINSTATE ALL CABLING TO ITS ORIGINAL CONDITION AND LOCATION FOLLOWING THE COMPLETION OF DEMOLITION WORKS.

.13 CONTRACTOR TO ISSUE AN RFI TO THE CONSULTANT TO ADDRESS CABLING THAT CANNOT BE REINSTATED TO ITS ORIGINAL CONDITION AND/OR LOCATION.

.14 CABLE SPLICING IS NOT PERMITTED WITHOUT PRIOR WRITTEN APPROVAL OF THE CONSULTANT.

GENERAL DEMOLITION NOTES

A. REMOVE ALL LIGHTING CONTROLS, NORMAL LIGHTING FIXTURES, EMERGENCY LIGHT FIXTURES, EXIT LIGHTS, EBUs, AND WIRING BACK TO SOURCE c/w CONDUIT AND BACK BOXES.

B. ALL RECEPTACLES, HARDWIRED DEVICES, BACK BOXES, WIRING, AND CONDUIT BACK TO SOURCE PANEL TO REMAIN.

C. ALL COMMUNICATION DEVICES, BACK BOXES, WIRING, AND CONDUIT TO REMAIN.

D. EXISTING FIRE ALARM PANEL, ANUNCIATOR, AND COMPUTER TO REMAIN. ALL OTHER FIRE ALARM DEVICES, BACK BOXES, WIRING, AND CONDUIT TO BE REMOVED.

E. REMOVE ALL EXISTING LIGHTING PANELS c/w SOURCE FEEDER AND CONDUIT BACK TO SOURCE.

F. REMOVE EXISTING MECHANICAL EQUIPMENT CONNECTIONS, MECHANICAL ROOM PANELS AND MOTOR CONTROL, SOURCE DISTRIBUTION CONDUIT, AND WIRE FEEDERS FROM MAIN DISTRIBUTION PANELS.

DRAWING NOTES

1. FIRE ALARM EQUIPMENT, WIRING, AND CONDUIT TO BE REMOVED PER GENERAL DEMOLITION NOTE D. TYPICAL.
2. RECEPTACLE, WIRING, AND CONDUIT TO REMAIN PER GENERAL DEMOLITION NOTE B. TYPICAL.
3. ELECTRICAL LIGHTING PANEL TO BE REMOVED PER GENERAL DEMOLITION NOTE E. TYPICAL.
4. LIGHTING FIXTURE, WIRING, AND CONDUIT TO BE REMOVED PER GENERAL DEMOLITION NOTE A. TYPICAL.
5. LIGHTING SWITCH, WIRING, AND CONDUIT TO BE REMOVED PER GENERAL DEMOLITION NOTE A. TYPICAL.

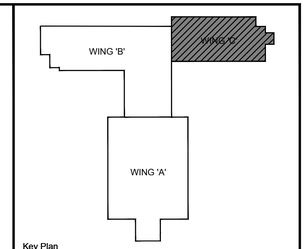

Key Plan

DO NOT SCALE DRAWINGS:

Contractors must check and verify all site conditions. Notify the Owner's Representative in writing before proceeding with the work if discrepancies are evident between the drawings and the site condition. No extras to the contract will be allowed if discrepancies were evident prior to start of work.

UNEXPECTED DISCOVERY OF ASBESTOS:

Where a friable material is discovered during construction, renovations and/or demolition, and it is suspected to contain asbestos, the Contractor must stop all work that may disturb the material. The Contractor shall advise the Owner of the discovery and await instructions from the owner.

A = Detail number

B = Drawing number where detailed

NO.	ISSUED	BY	DATE
1	ISSUED FOR CONVENIENCE	TA	APR 12, 2019
0	ISSUED FOR PERMIT & TENDER	TA	NOV 2, 2018

Orientation

Seal

Seal

UNIVERSITY of GUELPH

Design, Engineering & Construction
Physical Resources
Guelph, Ontario, N1G 2W1

Consultant

www.jlrichards.ca

J.L.Richards
ENGINEERS · ARCHITECTS · PLANNERS

Project

BUILDING #046
RENOVATIONS

Drawing Title

ELECTRICAL
EXISTING ELECTRICAL
SYSTEMS WING C

Project No.

504034

Location

UNIVERSITY OF GUELPH
BUILDING #46

Scale: NTS	Date: APR 12, 2019
Drawn by: AM	Drawing No.
Checked By: HM	DE12
Approved By: HM	
JLR #: 27915	

Cad File No. ----

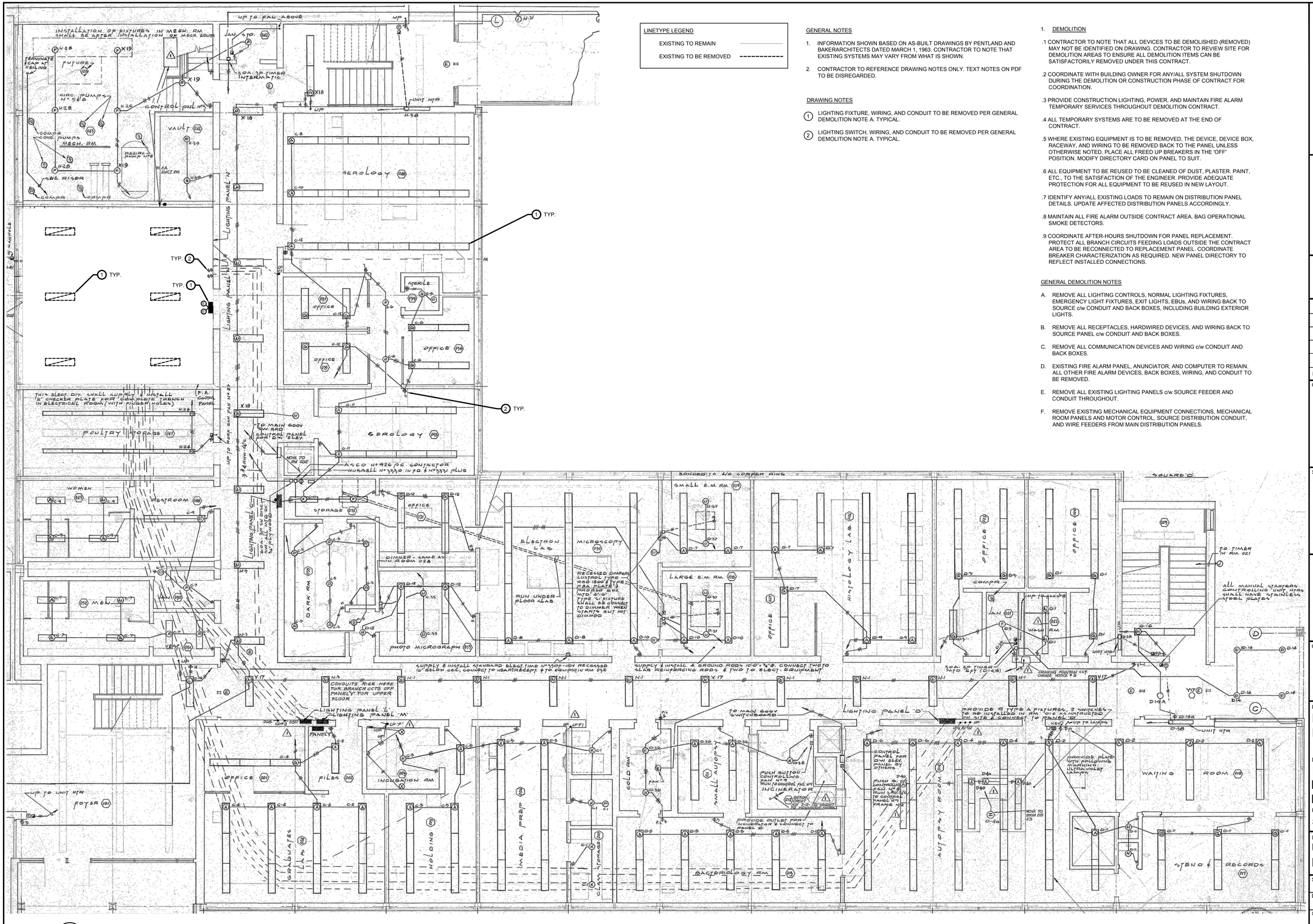

1 EXISTING LIGHTING WING B LEVEL 1
DE13
SCALE: NTS

LINETYPE LEGEND

EXISTING TO REMAIN

EXISTING TO BE REMOVED

GENERAL NOTES

1. INFORMATION SHOWN BASED ON AS-BUILT DRAWINGS BY PENTLAND AND BAKERARCHITECTS DATED MARCH 1, 1963. CONTRACTOR TO NOTE THAT EXISTING SYSTEMS MAY VARY FROM WHAT IS SHOWN.
2. CONTRACTOR TO REFERENCE DRAWING NOTES ONLY. TEXT NOTES ON PDF TO BE DISREGARDED.

DRAWING NOTES

1. LIGHTING FIXTURE, WIRING, AND CONDUIT TO BE REMOVED PER GENERAL DEMOLITION NOTE A. TYPICAL.
2. LIGHTING SWITCH, WIRING, AND CONDUIT TO BE REMOVED PER GENERAL DEMOLITION NOTE A. TYPICAL.

1. DEMOLITION

.1 CONTRACTOR TO NOTE THAT ALL DEVICES TO BE DEMOLISHED (REMOVED) MAY NOT BE IDENTIFIED ON DRAWING. CONTRACTOR TO REVIEW SITE FOR DEMOLITION AREAS TO ENSURE ALL DEMOLITION ITEMS CAN BE SATISFACTORILY REMOVED UNDER THIS CONTRACT.

.2 COORDINATE WITH BUILDING OWNER FOR ANY/ALL SYSTEM SHUTDOWN DURING THE DEMOLITION OR CONSTRUCTION PHASE OF CONTRACT FOR COORDINATION.

.3 PROVIDE CONSTRUCTION LIGHTING, POWER, AND MAINTAIN FIRE ALARM TEMPORARY SERVICES THROUGHOUT DEMOLITION CONTRACT.

.4 ALL TEMPORARY SYSTEMS ARE TO BE REMOVED AT THE END OF CONTRACT.

.5 WHERE EXISTING EQUIPMENT IS TO BE REMOVED, THE DEVICE, DEVICE BOX, RACEWAY, AND WIRING TO BE REMOVED BACK TO THE PANEL UNLESS OTHERWISE NOTED. PLACE ALL FREED UP BREAKERS IN THE 'OFF' POSITION. MODIFY DIRECTORY CARD ON PANEL TO SUIT.

.6 ALL EQUIPMENT TO BE REUSED TO BE CLEANED OF DUST, PLASTER. PAINT, ETC., TO THE SATISFACTION OF THE ENGINEER. PROVIDE ADEQUATE PROTECTION FOR ALL EQUIPMENT TO BE REUSED IN NEW LAYOUT.

.7 IDENTIFY ANY/ALL EXISTING LOADS TO REMAIN ON DISTRIBUTION PANEL DETAILS. UPDATE AFFECTED DISTRIBUTION PANELS ACCORDINGLY.

.8 MAINTAIN ALL FIRE ALARM OUTSIDE CONTRACT AREA. BAG OPERATIONAL SMOKE DETECTORS.

.9 COORDINATE AFTER-HOURS SHUTDOWN FOR PANEL REPLACEMENT. PROTECT ALL BRANCH CIRCUITS FEEDING LOADS OUTSIDE THE CONTRACT AREA TO BE RECONNECTED TO REPLACEMENT PANEL. COORDINATE BREAKER CHARACTERIZATION AS REQUIRED. NEW PANEL DIRECTORY TO REFLECT INSTALLED CONNECTIONS.

GENERAL DEMOLITION NOTES

A. REMOVE ALL LIGHTING CONTROLS, NORMAL LIGHTING FIXTURES, EMERGENCY LIGHT FIXTURES, EXIT LIGHTS, EBUs, AND WIRING BACK TO SOURCE c/w CONDUIT AND BACK BOXES, INCLUDING BUILDING EXTERIOR LIGHTS.

B. REMOVE ALL RECEPTACLES, HARDWIRED DEVICES, AND WIRING BACK TO SOURCE PANEL c/w CONDUIT AND BACK BOXES.

C. REMOVE ALL COMMUNICATION DEVICES AND WIRING c/w CONDUIT AND BACK BOXES.

D. EXISTING FIRE ALARM PANEL, ANUNCIATOR, AND COMPUTER TO REMAIN. ALL OTHER FIRE ALARM DEVICES, BACK BOXES, WIRING, AND CONDUIT TO BE REMOVED.

E. REMOVE ALL EXISTING LIGHTING PANELS c/w SOURCE FEEDER AND CONDUIT THROUGHOUT.

F. REMOVE EXISTING MECHANICAL EQUIPMENT CONNECTIONS, MECHANICAL ROOM PANELS AND MOTOR CONTROL, SOURCE DISTRIBUTION CONDUIT, AND WIRE FEEDERS FROM MAIN DISTRIBUTION PANELS.

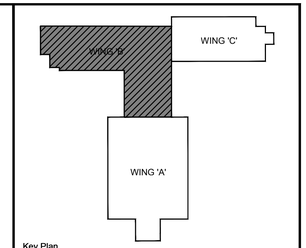

Key Plan

DO NOT SCALE DRAWINGS:

Contractors must check and verify all site conditions. Notify the Owner's Representative in writing before proceeding with the work if discrepancies are evident between the drawings and the site condition. No extras to the contract will be allowed if discrepancies were evident prior to start of work.

UNEXPECTED DISCOVERY OF ASBESTOS:

Where a friable material is discovered during construction, renovations and/or demolition, and it is suspected to contain asbestos, the Contractor must stop all work that may disturb the material. The Contractor shall advise the Owner of the discovery and await instructions from the owner.

A = Detail number

B = Drawing number where detailed

NO.	ISSUED	BY	DATE
0	ISSUED FOR PERMIT & TENDER	TA	NOV 2, 2018

Orientation

Seal

Seal

UNIVERSITY of GUELPH

Design, Engineering & Construction
Physical Resources
Guelph, Ontario. N1G 2W1

Consultant

www.jlrichards.ca

J.L.Richards
ENGINEERS · ARCHITECTS · PLANNERS

Project

BUILDING #046
RENOVATIONS

Drawing Title

ELECTRICAL
EXISTING LIGHTING WING B
LEVEL 1

Project No.

504034

Location

UNIVERSITY OF GUELPH
BUILDING #46

Scale: NTS	Date: APR 12, 2019
Drawn by: AM	Drawing No.
Checked By: HM	DE13
Approved By: HM	
JLR #: 27915	

Cad File No. ----

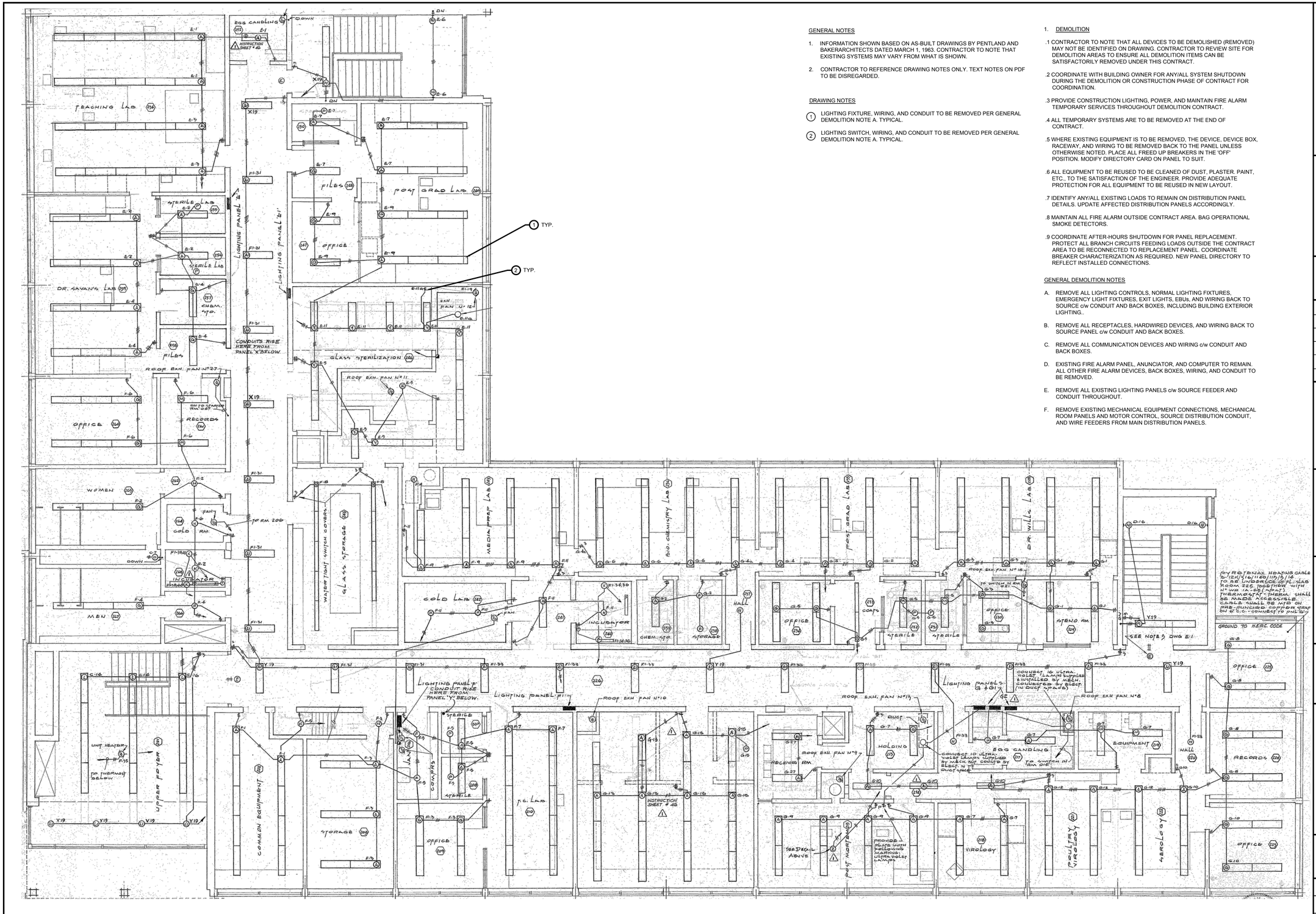

1 DE14 EXISTING LIGHTING WING B LEVEL 2

SCALE: NTS

GENERAL NOTES

1. INFORMATION SHOWN BASED ON AS-BUILT DRAWINGS BY PENTLAND AND BAKERARCHITECTS DATED MARCH 1, 1963. CONTRACTOR TO NOTE THAT EXISTING SYSTEMS MAY VARY FROM WHAT IS SHOWN.
2. CONTRACTOR TO REFERENCE DRAWING NOTES ONLY. TEXT NOTES ON PDF TO BE DISREGARDED.

DRAWING NOTES

1. LIGHTING FIXTURE, WIRING, AND CONDUIT TO BE REMOVED PER GENERAL DEMOLITION NOTE A. TYPICAL.
2. LIGHTING SWITCH, WIRING, AND CONDUIT TO BE REMOVED PER GENERAL DEMOLITION NOTE A. TYPICAL.

1. DEMOLITION

.1 CONTRACTOR TO NOTE THAT ALL DEVICES TO BE DEMOLISHED (REMOVED) MAY NOT BE IDENTIFIED ON DRAWING. CONTRACTOR TO REVIEW SITE FOR DEMOLITION AREAS TO ENSURE ALL DEMOLITION ITEMS CAN BE SATISFACTORILY REMOVED UNDER THIS CONTRACT.

.2 COORDINATE WITH BUILDING OWNER FOR ANY/ALL SYSTEM SHUTDOWN DURING THE DEMOLITION OR CONSTRUCTION PHASE OF CONTRACT FOR COORDINATION.

.3 PROVIDE CONSTRUCTION LIGHTING, POWER, AND MAINTAIN FIRE ALARM TEMPORARY SERVICES THROUGHOUT DEMOLITION CONTRACT.

.4 ALL TEMPORARY SYSTEMS ARE TO BE REMOVED AT THE END OF CONTRACT.

.5 WHERE EXISTING EQUIPMENT IS TO BE REMOVED, THE DEVICE, DEVICE BOX, RACEWAY, AND WIRING TO BE REMOVED BACK TO THE PANEL UNLESS OTHERWISE NOTED. PLACE ALL FREED UP BREAKERS IN THE 'OFF' POSITION. MODIFY DIRECTORY CARD ON PANEL TO SUIT.

.6 ALL EQUIPMENT TO BE REUSED TO BE CLEANED OF DUST, PLASTER. PAINT, ETC., TO THE SATISFACTION OF THE ENGINEER. PROVIDE ADEQUATE PROTECTION FOR ALL EQUIPMENT TO BE REUSED IN NEW LAYOUT.

.7 IDENTIFY ANY/ALL EXISTING LOADS TO REMAIN ON DISTRIBUTION PANEL DETAILS. UPDATE AFFECTED DISTRIBUTION PANELS ACCORDINGLY.

.8 MAINTAIN ALL FIRE ALARM OUTSIDE CONTRACT AREA. BAG OPERATIONAL SMOKE DETECTORS.

.9 COORDINATE AFTER-HOURS SHUTDOWN FOR PANEL REPLACEMENT. PROTECT ALL BRANCH CIRCUITS FEEDING LOADS OUTSIDE THE CONTRACT AREA TO BE RECONNECTED TO REPLACEMENT PANEL. COORDINATE BREAKER CHARACTERIZATION AS REQUIRED. NEW PANEL DIRECTORY TO REFLECT INSTALLED CONNECTIONS.

GENERAL DEMOLITION NOTES

A. REMOVE ALL LIGHTING CONTROLS, NORMAL LIGHTING FIXTURES, EMERGENCY LIGHT FIXTURES, EXIT LIGHTS, EBUs, AND WIRING BACK TO SOURCE c/w CONDUIT AND BACK BOXES, INCLUDING BUILDING EXTERIOR LIGHTING..
B. REMOVE ALL RECEPTACLES, HARDWIRED DEVICES, AND WIRING BACK TO SOURCE PANEL c/w CONDUIT AND BACK BOXES.
C. REMOVE ALL COMMUNICATION DEVICES AND WIRING c/w CONDUIT AND BACK BOXES.
D. EXISTING FIRE ALARM PANEL, ANUNCIATOR, AND COMPUTER TO REMAIN. ALL OTHER FIRE ALARM DEVICES, BACK BOXES, WIRING, AND CONDUIT TO BE REMOVED.
E. REMOVE ALL EXISTING LIGHTING PANELS c/w SOURCE FEEDER AND CONDUIT THROUGHOUT.
F. REMOVE EXISTING MECHANICAL EQUIPMENT CONNECTIONS, MECHANICAL ROOM PANELS AND MOTOR CONTROL, SOURCE DISTRIBUTION CONDUIT, AND WIRE FEEDERS FROM MAIN DISTRIBUTION PANELS.

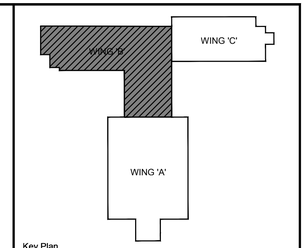

Key Plan

DO NOT SCALE DRAWINGS:

Contractors must check and verify all site conditions. Notify the Owner's Representative in writing before proceeding with the work if discrepancies are evident between the drawings and the site condition. No extras to the contract will be allowed if discrepancies were evident prior to start of work.

UNEXPECTED DISCOVERY OF ASBESTOS:

Where a friable material is discovered during construction, renovations and/or demolition, and it is suspected to contain asbestos, the Contractor must stop all work that may disturb the material. The Contractor shall advise the Owner of the discovery and await instructions from the owner.

A / B — A = Detail number; B = Drawing number where detailed

NO.	ISSUED	BY	DATE
1	ISSUED FOR CONVENIENCE	TA	APR 12, 2019
0	ISSUED FOR PERMIT & TENDER	TA	NOV 2, 2018

Orientation

Seal

Seal

UNIVERSITY of GUELPH
Design, Engineering & Construction
Physical Resources
Guelph, Ontario. N1G 2W1

Consultant

www.jlrichards.ca

J.L.Richards
ENGINEERS · ARCHITECTS · PLANNERS

Project
BUILDING #046
RENOVATIONS

Drawing Title
ELECTRICAL
EXISTING LIGHTING WING B
LEVEL 2

Project No.
504034

Location
UNIVERSITY OF GUELPH
BUILDING #46

Scale: NTS	Date: APR 12, 2019
Drawn by: AM	Drawing No.
Checked By: HM	DE14
Approved By: HM	
JLR #: 27915	

Cad File No. ----

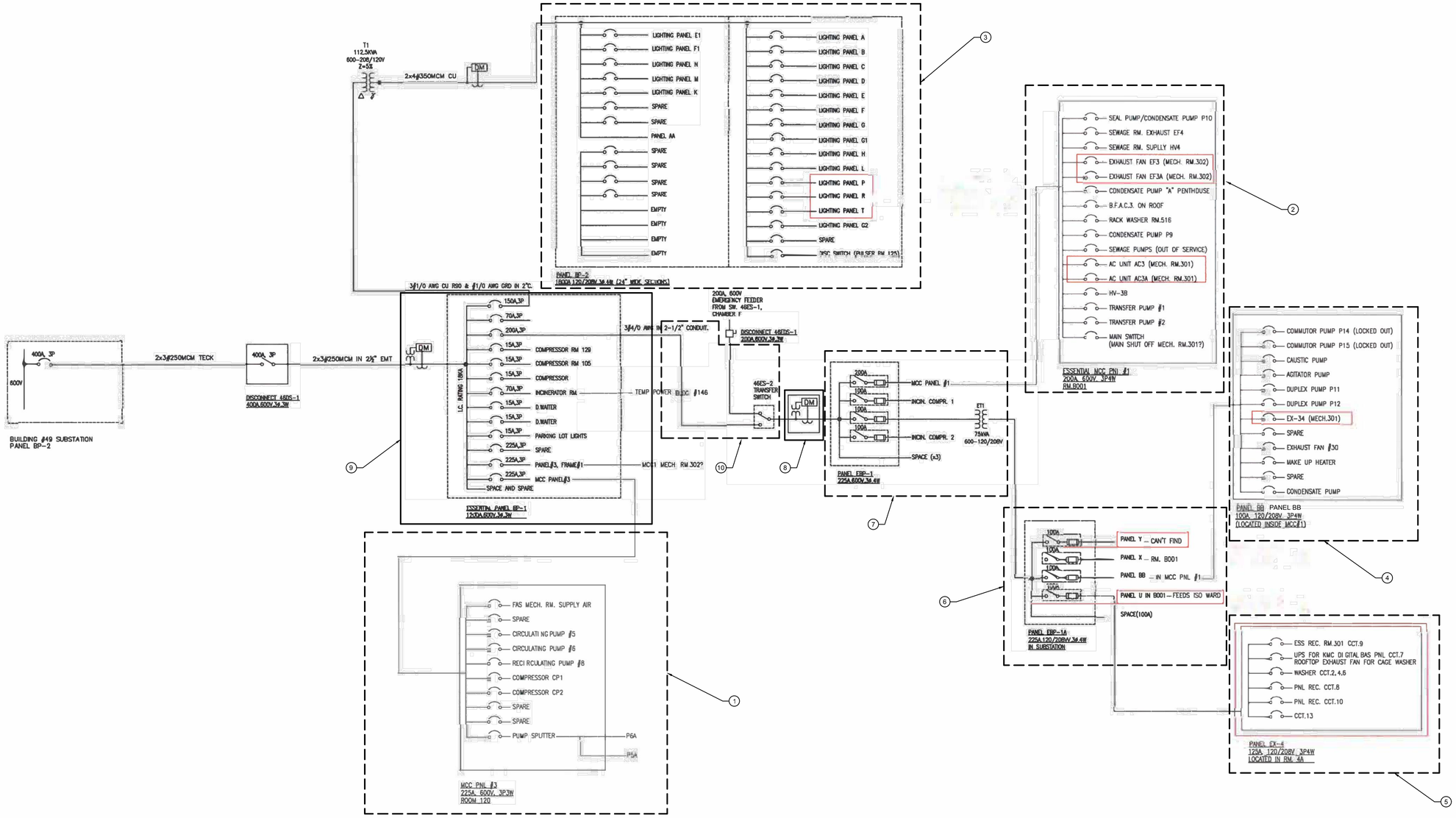

1 SINGLE LINE DEMOLITION
DE15
SCALE: N.T.S.

GENERAL NOTES:

A. DEMOLITION OF ELECTRICAL ITEMS DOWNSTREAM OF EMERGENCY TRANSFER SWITCH 46ES-2 TO BE CARRIED OUT ONCE CIRCUITS FOR WING A HAVE BEEN RELOCATED AND CONNECTED / ENERGIZED VIA NEW EMERGENCY DISTRIBUTION.

B. ELECTRICAL CONTRACTOR TO COORDINATE AND REVIEW MECHANICAL SYSTEMS DEMOLITION SCOPE AND SEQUENCE TO ENSURE REQUIRED SYSTEMS NEW AND EXISTING ARE POWERED / MAINTAINED DURING THE COURSE OF CONSTRUCTION.

C. ELECTRICAL CONTRACTOR TO VERIFY EXISTING DISTRIBUTION AND EQUIPMENT TO BE DEMOLISHED.

DRAWING NOTES:

1. EXISTING MCC-3 IN GROUND FLOOR MECHANICAL ROOM 120 TO BE REMOVED c/w ASSOCIATED CONDUIT AND WIRING TO ALL MECHANICAL EQUIPMENT. DEMOLITION OF ELECTRICAL SYSTEMS TO BE COORDINATED WITH MECHANICAL SYSTEMS DEMOLITION. (DEMOLITION OF MCC-3 TO BE PROVIDED AS A SEPARATE COST)

2. EXISTING MCC-1 TO BE REMOVED c/w ASSOCIATED CONDUIT AND WIRING TO ALL MECHANICAL EQUIPMENT. EXISTING CIRCUIT WIRING FOR EF3, EF3A, AC3, AND AC3A TO BE DISCONNECTED AND REROUTED TO NEW STARTER LOCATIONS. PROVIDE NEW WALL MOUNTED HOA STARTERS, AND RECONNECT EXISTING FEEDERS TO NEW STARTER. NEW STARTERS TO BE FED FROM NEW PANEL DP-2X. REFER TO DRAWING E20 FOR DETAILS. DEMOLITION AND REMOVAL OF MCC-1 SHALL BE CARRIED OUT ONCE CIRCUIT WIRING TO EF3, EF3A, AC3, AND AC3A HAS BEEN RELOCATED AND ENERGIZED FROM NEW EMERGENCY PANEL.

3. EXISTING ENCLOSURE FOR PANEL BP-2 TO REMAIN. ALL BREAKERS AND BRANCH FEEDERS TO BE REMOVED AS PER DEMOLITION DRAWINGS. FEEDERS SERVING PANELS P, R, AND T TO REMAIN AND ARE TO BE RECONNECTED TO RETROFITTED PANEL. REFER TO DRAWING E02 AND DEMOLITION DRAWINGS FOR DETAILS.

4. EXISTING PANEL BB & MCC-1 TO BE REMOVED c/w ALL ASSOCIATED CONDUIT AND WIRING. FEEDER SERVING EXHAUST FAN EX-34 TO BE RECONNECTED TO NEW PANEL DP-2E. CONTRACTOR TO CONFIRM BREAKER SIZE FOR RECONNECTION. REFER TO DRAWING E02 FOR DETAILS.

5. PANEL EX-4 C/W ASSOCIATED CONDUIT AND WIRING TO BE REMOVED.

6. PANEL EBP-1A C/W ALL ASSOCIATED CONDUIT AND WIRING TO BE REMOVED. PANEL U TO REMAIN, AND IS TO BE RECONNECTED TO NEW PANEL DP-2E C/W NEW CONDUIT AND FEEDERS.

7. PANEL EBP-1 TO BE REMOVED c/w ALL ASSOCIATED CONDUIT AND WIRING.

8. EXISTING ELECTRICAL METER TO BE DISCONNECTED AND REWIRED TO METER NEW PANEL DP-1E. REFER TO DRAWING E02.

9. EXISTING PANEL BP-1 TO REMAIN.

10. EXISTING EMERGENCY TRANSFER SWITCH AND ASSOCIATED CONDUIT AND WIRING TO BE DEMOLISHED. DISCONNECT FOR EMERGENCY GENERATOR FEED TO REMAIN.

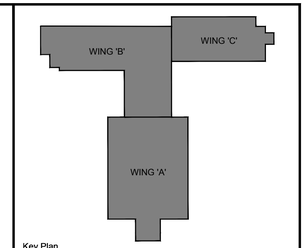

Key Plan

DO NOT SCALE DRAWINGS:

Contractors must check and verify all site conditions. Notify the Owner's Representative in writing before proceeding with the work if discrepancies are evident between the drawings and the site condition. No extras to the contract will be allowed if discrepancies were evident prior to start of work.

UNEXPECTED DISCOVERY OF ASBESTOS:

Where a friable material is discovered during construction, renovations and/or demolition, and it is suspected to contain asbestos, the Contractor must stop all work that may disturb the material. The Contractor shall advise the Owner of the discovery and await instructions from the owner.

A / B — A = Detail number; B = Drawing number where detailed

NO.	ISSUED	BY	DATE
1	ISSUED FOR CONVENIENCE	TA	APR 12, 2019
0	ISSUED FOR PERMIT & TENDER	TA	NOV 2, 2018

Orientation

Seal

Seal

UNIVERSITY of GUELPH
Design, Engineering & Construction
Physical Resources
Guelph, Ontario, N1G 2W1

Consultant
www.jlrichards.ca
J.L.Richards
ENGINEERS · ARCHITECTS · PLANNERS

Project
BUILDING #046
RENOVATIONS

Drawing Title
SINGLE LINE DEMOLITION

Project No.
504034

Location
UNIVERSITY OF GUELPH
BUILDING #46

Scale: N.T.S.	Date: APR 12, 2019
Drawn by: SO	Drawing No.
Checked By: HM	DE15
Approved By: HM	
JLR #: 27915	

Cad File No. ----

ELECTRICAL SYMBOLS - LEGEND / ABBREVIATIONS / TYPE DESIGNATIONS

LIGHTING

- TYP — LED LIGHTING FIXTURE (610x1220mm), TYPE AS INDICATED, RECESSED CEILING MOUNTED - NORMAL POWER
- TYP — LED LIGHTING FIXTURE (305x1220mm), TYPE AS INDICATED, RECESSED CEILING MOUNTED - NORMAL POWER
- TYP — LED LIGHTING FIXTURE (610x610mm), TYPE AS INDICATED, RECESSED CEILING MOUNTED - NORMAL POWER
- TYP — LED LINEAR LIGHTING FIXTURE, TYPE AS INDICATED, SURFACE CEILING MOUNTED - NORMAL POWER
- TYP — LED LIGHTING FIXTURE (610x1220mm), TYPE AS INDICATED, MOUNTED ACCORDING TO FIXTURE TYPE - EMERGENCY POWER
- TYP — LED LIGHTING FIXTURE (305x1220mm), TYPE AS INDICATED, MOUNTED ACCORDING TO FIXTURE TYPE - EMERGENCY POWER
- TYP — LED LIGHTING FIXTURE (610x610mm), TYPE AS INDICATED, RECESSED CEILING MOUNTED - EMERGENCY POWER
- X — LED POT LIGHT TYPE AS INDICATED, RECESSED CEILING MOUNTED - NORMAL POWER
- X — LED WALL MOUNTED LIGHT TYPE AS INDICATED, WALL MOUNTED - NORMAL POWER

POWER

- 15A, 125V, NEMA 5-15R, DUPLEX RECEPTACLE, FLUSH MOUNTED.
- 20A, 125V. NEMA 5-20R, DEDICATED DUPLEX RECEPTACLE (ONE PER CIRCUIT) FLUSH WALL MOUNTED.
- 20 — 20A, 125V. NEMA 5-20RA, (T-SLOT) DUPLEX RECEPTACLE, FLUSH WALL MOUNTED.
- GFI — 20A, 125V. NEMA 5-20RA (T-SLOT) GROUND FAULT CIRCUIT INTERRUPER DUPLEX RECEPTACLE, FLUSH WALL MOUNTED.
- TV — 15A, 125V. NEMA 5-15R, RECESSED DUPLEX RECEPTACLE SIMILAR TO LEVITON 689.
- USB — 15A, 125V. NEMA 5-15R, DUPLEX RECEPTACLE c/w 2 USB PORTS FLUSH MOUNTED. SIMILAR TO LEVTION T5632
- 125V QUAD RECEPTACLE, FLUSH WALL MOUNTED.
- SPECIAL RECEPTACLE, TYPE AS INIDICATED
- ELECTRICAL PANEL : REFER TO SPECIFICATIONS, DRAWINGS AND PANEL SCHEDULES FOR ADDITIONAL INFORMATION. (NOTE: SURFACE AND / OR RECESS WALL MOUNTED AS NOTED ON DRAWINGS)
- DRY TYPE TRANSFORMER. (D.T.T.) VARIOUS MOUNTINGS IE: FLOOR / WALL / RACK / AND/OR SUSPENDED AS NOTED ON DRAWINGS. FOR TYPE, SIZE AND RATINGS REFER TO DRAWINGS AND SPECIFICATIONS.
- DO — 120V SINGLE LEAF HANDICAP DOOR OPERATOR.
- HC — HANDICAP DOOR OPERATOR PADDLE.
- CB — CODE BLUE EMERGENCY STATION.
- PB — PUSH BUTTON
- REMOTE ANNUNCIATOR WITH ADJUSTABLE SOUNDER FOR EMERGENCY DURESS SYSTEM.
- HW — HARDWIRED CONNECTION TO ELECTRICAL EQUIPMENT
- RLY / RLY — 15A, 125V, NEMA 5-15R, DUPLEX / QUADRUPLEX RECEPTACLE CONTROLLED VIA TIME CLOCK / RELAY PANEL.
- COPPER GROUND BUS C/W STAND OFF BUSHINGS. LEGRAND OR-GB4X12J OR EQUIVALENT.

FIRE ALARM

- FACP — FIRE ALARM CONTROL PANEL
- FAAA — FIRE ALARM ANNUNCIATOR PANEL
- FAR — FIRE ALARM RELAY, TYPE AS INDICATED
- F — FIRE ALARM PULL STATION, WALL MOUNTED AT 1150mm A.F.F. UNLESS OTHERWISE NOTED.
- SD — FIRE ALARM SMOKE DETECTOR CEILING MOUNTED UNLESS OTHERWISE NOTED.
- AUX SD — FIRE ALARM CONVENTIONAL SMOKE DETECTOR WITH FA RELAY AND REMOTE INDICATOR
- F — FIRE ALARM BELL STROBE WALL MOUNTED AT 2100mm A.F.F. UNLESS OTHERWISE NOTED.
- FIRE ALARM STROBE CEILING MOUNTED UNLESS OTHERWISE NOTED.
- DH — FIRE ALARM MAGNETIC DOOR HOLDER
- FS — FIRE ALARM SPRINKLER SYSTEM FLOW SWITCH
- TS — FIRE ALARM SPRINKLER SYSTEM TAMPER SWITCH
- IM — FIRE ALARM ISOLATOR MODULE

LIGHTING CONTROLS

- S — 15A, 125V. SINGLE POLE TOGGLE SWITCH, FLUSH WALL MOUNTED CIRCUIT AS INDICATED
- S3 — 15A, 125V. 3-WAY LIGHT SWITCH, FLUSH WALL MOUNTED CIRCUIT AS INDICATED
- S4 — 15A, 125V. 4-WAY LIGHT SWITCH, FLUSH WALL MOUNTED CIRCUIT AS INDICATED
- SV — ON / OFF / VACANCY SENSOR LIGHT SWITCH. FLUSH WALL MOUNTED. CIRCUIT AS INDICATED.
- SDV — ON / OFF / DIMMING / VACANCY SENSOR LIGHT SWITCH. FLUSH WALL MOUNTED. CIRCUIT AS INDICATED.
- SLC1 — LIGHTING CONTROL SWITCH. FLUSH WALL MOUNTED. CIRCUIT AS INDICATED. "LC1" LETTER DENOTES TYPE REFER TO E15 FOR INFORMATION
- OS C — LIGHTING CONTROL SENSOR CEILING MOUNTED, DUAL TECHNOLOGY VS = VACANCY / OS = OCCUPANCY "C" LETTER DENOTES TYPE REFER TO E15 FOR INFORMATION
- OS A — LIGHTING CONTROL SENSOR WALL MOUNTED, DUAL TECHNOLOGY VS = VACANCY / OS = OCCUPANCY "A" LETTER DENOTES TYPE REFER TO E15 FOR INFORMATION

ABBREVIATIONS

A.F.F.	ABOVE FINISHED FLOOR
A.F.G.	ABOVE FINISHED GRADE
A.S.L.	ABOVE STAIR LANDING
ATS	AUTOMATIC TRANSFER SWITCH
C	MOUNTED NEAR CEILING
CL	CEILING MOUNTED
DN	ROUTED DOWN
DTT	DRY TYPE TRANSFORMER
E	EMERGENCY POWER
F	MOUNTED ON FURNITURE
FL	FLOOR MOUNTED
GF	GROUND FAULT CIRCUIT INTERRUPTER
GND	GROUND CONDUCTOR
IG	ISOLATED GROUND
LT	LIQUID TIGHT
LV	LOW VOLTAGE
MH	MOUNTING HEIGHT
N	NORMAL POWER
NIC	NOT IN CONTRACT
NTS	NOT TO SCALE
OC	OVER COUNTER
PC	PHOTO ELECTRIC CELL
PM	PEDESTAL MOUNTED
PNL	PANEL
SM	SURFACE MOUNTED
TL	TWIST LOCK
TV	RECEPTACLE FOR TELEVISION MOUNTED 1500mm A.F.F.
UP	ROUTED UP
WP	WEATHER PROOF

MISCELLANEOUS

- # — DRAWING NOTE - REFER TO DRAWING NOTE AS INDICATED.
- MSCL #X — MECHANICAL EQUIPMENT REFERENCE NUMBER. REFER TO MOTOR STARTER AND CONTROLS SCHEDULE FOR INFORMATION.
- 000 — ROOM NUMBER.

PICTOGRAM EMERGENCY EGRESS SIGN FIXTURE IDENTIFICATION SCHEDULE

EGRESS SIGN TYPE #	EGRESS SIGN PICTOGRAM IMAGE GRAPHICAL SYMBOLS AND DESCRIPTION
x1	RUNNING MAN IN DOORWAY
x2	RUNNING MAN IN DOORWAY WITH PROGRESS TO THE RIGHT 90° DIRECTIONAL ARROW
x3	RUNNING MAN IN DOORWAY WITH PROGRESS TO THE LEFT 90° DIRECTIONAL ARROW
x4	RUNNING MAN IN DOORWAY WITH PROGRESS TO THE FORWARD DIRECTIONAL ARROW
x5	RUNNING MAN IN DOORWAY WITH PROGRESS DOWN DIRECTIONAL ARROW
x6	RUNNING MAN IN DOORWAY WITH PROGRESS DOWN TO THE RIGHT DIRECTIONAL ARROW
x7	RUNNING MAN IN DOORWAY WITH PROGRESS DOWN TO THE LEFT DIRECTIONAL ARROW
x8	RUNNING MAN IN DOORWAY WITH PROGRESS UP TO THE RIGHT DIRECTIONAL ARROW
x9	RUNNING MAN IN DOORWAY WITH PROGRESS UP TO THE LEFT DIRECTIONAL ARROW

LEGEND FACE PLATE(S)
- S - SINGLE SIDED
- D - DOUBLE SIDED

LEGEND MOUNTING TYPE
- -W - WALL MOUNTED
- -C - CEILING MOUNTED WITH CANOPY
- -E - END MOUNTED
- -U - UNIVERSAL MOUNTED WITH CANOPY(S)
- -ST - STEM MOUNTED WITH RAIN TIGHT FITTING

EGRESS SIGN IDENTIFICATION EXAMPLES

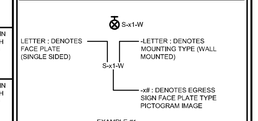

EXAMPLE #1

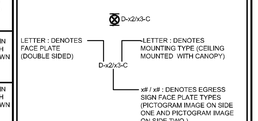

EXAMPLE #2

Ontario Building Code 2012
Refer to the following OBC 2012 standards:
Division B Part 3 : 3.2.7. - Lighting and Emergency Power Systems
Division B Part 3 : 3.4.5. - Exit Signs
Division B Part 9 : 9.9.11. - Exit Signs
Division B Part 9 : 9.9.12. - Lighting
Division B Appendix A : A-3.4.5.1.(2)(c) - Graphical Symbols for Exit Signs
ISO 3864-1 - Graphical Symbols (Pictogram)
ISC 1070 - Dimensions Graphical Symbols.
Additional References:
CSA - C860-01 December 2002 - Performance of Internally Lighted Exit Signs
CSA - C22.2 No. 141-10 - Unit Equipment for Emergency Lighting
NFPA 101-2006 - Life Safety Code
NXS 26 53 10 National Master Specification - Pictogram Exit Lights

1 / E01 ELECTRICAL LEGEND

LUMINAIRE SCHEDULE

TYPE	LAMP	DESCRIPTION	MANUFACTURER (MODEL NUMBER)	
A1	LED 3500K 40W	1'x4' 120V LED TROFFER RECESSED IN T-BAR CEILING, 4400 LUMEN OUTPUT, 0-10V DIMMING, 80CRI.	EATON METALUX CRUZE SERIES - H.E. WILLIAMS LT LED SERIES - COLUMBIA LIGHTING LCAT SERIES -	(14CZ-LD5-44SE-UNV-L835-CD1-U) (LT-14-L47/835-DIM-UNV) (LCAT-14-35-LW-G-ED-U)
A2	LED 3500K 40W	2'x2' 120V LED TROFFER RECESSED IN T-BAR CEILING, 4400 LUMEN OUTPUT, 0-10V DIMMING, 80CRI.	EATON METALUX CRUZE SERIES - H.E. WILLIAMS LT LED SERIES - COLUMBIA LIGHTING LCAT SERIES -	(22CZ-LD5-44SE-UNV-L835-CD1-U) (LT-22-L49/835-DIM-UNV) (LCAT-22-35-LW-G-ED-U)
A3	LED 3500K 40W	2'x4' 120V LED TROFFER RECESSED IN T-BAR CEILING, 4500 LUMEN OUTPUT, 0-10V DIMMING, 80CRI.	EATON METALUX CRUZE SERIES - H.E. WILLIAMS LT LED SERIES - COLUMBIA LIGHTING LCAT SERIES -	(24CZ-LD5-45SE-UNV-L835-CD1-U) (LT-24-L52/835-DIM-UNV) (LCAT-24-35-LW-G-ED-U)
B1	LED 3500K 25W	1'x4' 120 V LED TROFFER RECESSED IN T-BAR CEILING, 3150 LUMEN OUTPUT, 0-10V DIMMING, 80CRI.	FLUXWERX - LOOP 1x4 SERIES - OR APPROVED EQUIVALENT	(LR1-14-B-35-E1-M)
B2	LED 3500K 25W	2'x2' 120 V LED TROFFER RECESSED IN T-BAR CEILING, 3400 LUMEN OUTPUT, 0-10V DIMMING, 80CRI.	FLUXWERX - LOOP 2x2 SERIES - OR APPROVED EQUIVALENT	(LR1-22-B-35-E1-M)
C1	LED 3500K 10W	150mm DIA. LED DOWNLIGHT RECESSED IN GYPSUM CEILING, 1000 LUMEN OUTPUT, 80CRI, 0-10V DIMMING.	LUMENPULSE DOWNLIGHT - SENSO LIGHTING ARTEMIS 3 SERIES - GOTHAM LIGHTING INCITO SERIES -	(LADM-A-120-L10-35K-CR80-M-RD-BK) AR3D-FL-A90-645-35-10-01-01-915-LCS-120) (ICO 35 / 20 6BR LSS 40D 120 EZ10)
C2	LED 3500K 10W	150mm DIA. LED DOWNLIGHT RECESSED IN T-BAR CEILING, 1000 LUMEN OUTPUT, 80CRI, 0-10V DIMMING.	LUMENPULSE DOWNLIGHT - SENSO LIGHTING ARTEMIS 3 SERIES - GOTHAM LIGHTING INCITO SERIES -	(LADM-A-120-L10-35K-CR80-M-RD-BK) AR3D-FL-A90-645-35-10-01-01-915-LCS-120) (ICO 35 / 20 6BR LSS 40D 120 EZ10)
C3	LED 3500K 30W	150mm DIA. LED DOWNLIGHT RECESSED IN GYPSUM CEILING, 3000 LUMEN OUTPUT, 80CRI, 0-10V DIMMING.	LUMENPULSE DOWNLIGHT - SENSO LIGHTING ARTEMIS 3 SERIES - GOTHAM LIGHTING INCITO SERIES -	(LADM-A-120-L30-35K-CR80-M-RD-BK) AR3D-FL-A90-645-35-30-01-01-915-LCS-120) (ICO 35 / 30 6BR LSS 40D 120 EZ10)
C4	LED 3500K 30W	150mm DIA. LED DOWNLIGHT RECESSED IN T-BAR CEILING, 3000 LUMEN OUTPUT, 80CRI, 0-10V DIMMING.	LUMENPULSE DOWNLIGHT - SENSO LIGHTING ARTEMIS 3 SERIES - GOTHAM LIGHTING INCITO SERIES -	(LADM-A-120-L30-35K-CR80-M-RD-BK) (AR3D-FL-A90-645-35-30-01-01-915-LCS-120) (ICO 35 / 30 6BR LSS 40D 120 EZ10)
C5	LED 3500K 30W	125/75mm DIA LED TILT DOWNLIGHT RECESSED IN T-BAR CEILING, 700 LUMEN OUTPUT, 90CRI. 0-10V DIMMING, MEDIUM OPTICS WITH SOFTENING/FROSTED LENS.	LUMENPULSE TILT DOWNLIGHT - OR APPROVED EQUIVALENT	(LACM-TILT-A-120-L07-35-CR90-DA1-NC-SL)
C6	LED 3500K 30W	150mm DIA. ULTRA THIN LED DOWNLIGHT RECESSED IN T-BAR CEILING, 900 LUMEN OUTPUT, 90CRI. LUMINAIRE DRIVER TO BE COLOUR TUNEDAND SET TO 3500K.	HALO DOWNLIGHT - OR APPROVED EQUIVALENT	(HLB6-09-9FS-1E-MW- HL6NCMF)
F1	LED 3500K 50W	WALL MOUNTED STAIRWELL LUMINAIRE, INTEGRAL OCCUPANCY SENSOR CONTROL, 80CRI, 5100 LUMEN OUTPUT.	LUMINAIRE LED TSL 9 SERIES - H.E. WILLIAMS SLF LED SERIES - LITHONIA LIGHTING BLWP SERIES -	(TSL92-50W-3500K-M7-120-277-OP-WHT) (SLF-2-L52/835-HIA-OCCSS SBR-10-DIM-UNV) (BLWP2 48L ADSMT EZ1 LP835 MSDPDT7ADCX DIM50)
H1 SERIES	LED 3500K	LED LINEAR LUMINAIRE RECESSED IN WOOD FEATURE CEILING, LENGTH AND ORIENTATION AS SHOWN ON DRAWINGS, 120V, 0-10V DIMMING.	REFER TO SCHEDULE ON DRAWING E09.	
J1	LED 3500K 45W	4 FOOT LED LENSED LUMINAIRE RECESSED IN COVE, 120V, 4600 LUMEN OUTPUT, 3500K, 0-10V DIMMING.	EATON METALUX SNLED SERIES - H.E. WILLIAMS 75 LED SERIES - COLUMBIA LIGHTING MPS SERIES -	(4SNLED-LD5-46SL-LN-UNV-L835-CD1-U) (75R-4-L50/835-DIM-UNV) (MPS-4-35-LW-C-W-ED-U)
J2	LED 3500K 20W	2 FOOT LED LENSED LUMINAIRE RECESSED IN COVE, 120V, 2400 LUMEN OUTPUT, 3500K, 0-10V DIMMING.	EATON METALUX SNLED SERIES - H.E. WILLIAMS 75 LED SERIES - COLUMBIA LIGHTING MPS SERIES -	(2SNLED-LD5-22SL-LN-UNV-L835-CD1-U) (75R-2-L30/835-DIM-UNV) (MPS-2-35-MW-C-W-ED-U)
J4	LED 4000K 45W	4 FOOT LED LENSED LUMINAIRE CHAIN HUNG AT 2700mm AFF, 120V, 4600 LUMEN OUTPUT.	EATON METALUX SNLED SERIES - H.E. WILLIAMS 75 LED SERIES - COLUMBIA LIGHTING MPS SERIES -	(4SNLED-LD5-46SL-LN-UNV-L840-CD1-U) (75R-4-L50/840-DIM-UNV) (MPS-4-40-LW-C-W-ED-U)
J5	LED 4000K 45W	4 FOOT LED LENSED LUMINAIRE WALL MOUNTED IN ELEVATOR SHAFT AT 2600mm AFF, 120V, 4600 LUMEN OUTPUT.	EATON METALUX SNLED SERIES - H.E. WILLIAMS 75 LED SERIES - COLUMBIA LIGHTING MPS SERIES -	(4SNLED-LD5-46SL-LN-UNV-L840-CD1-U) (75R-4-L50/840-DIM-UNV) (MPS-4-40-LW-C-W-ED-U)

LUMINAIRE SCHEDULE

TYPE	LAMP	DESCRIPTION	MANUFACTURER (MODEL NUMBER)	
J1	LED 3500K 45W	4 FOOT LED LENSED LUMINAIRE RECESSED IN COVE, 120V, 4600 LUMEN OUTPUT, 3500K, 0-10V DIMMING.	EATON METALUX SNLED SERIES - H.E. WILLIAMS 75 LED SERIES - COLUMBIA LIGHTING MPS SERIES -	(4SNLED-LD5-46SL-LN-UNV-L835-CD1-U) (75R-4-L50/835-DIM-UNV) (MPS-4-35-LW-C-W-ED-U)
J2	LED 3500K 20W	2 FOOT LED LENSED LUMINAIRE RECESSED IN COVE, 120V, 2400 LUMEN OUTPUT, 3500K, 0-10V DIMMING.	EATON METALUX SNLED SERIES - H.E. WILLIAMS 75 LED SERIES - COLUMBIA LIGHTING MPS SERIES -	(2SNLED-LD5-22SL-LN-UNV-L835-CD1-U) (75R-2-L30/835-DIM-UNV) (MPS-2-35-MW-C-W-ED-U)
J4	LED 4000K 45W	4 FOOT LED LENSED LUMINAIRE CHAIN HUNG AT 2700mm AFF, 120V, 4600 LUMEN OUTPUT.	EATON METALUX SNLED SERIES - H.E. WILLIAMS 75 LED SERIES - COLUMBIA LIGHTING MPS SERIES -	(4SNLED-LD5-46SL-LN-UNV-L840-CD1-U) (75R-4-L50/840-DIM-UNV) (MPS-4-40-LW-C-W-ED-U)
J5	LED 4000K 45W	4 FOOT LED LENSED LUMINAIRE WALL MOUNTED IN ELEVATOR SHAFT AT 2600mm AFF, 120V, 4600 LUMEN OUTPUT.	EATON METALUX SNLED SERIES - H.E. WILLIAMS 75 LED SERIES - COLUMBIA LIGHTING MPS SERIES -	(4SNLED-LD5-46SL-LN-UNV-L840-CD1-U) (75R-4-L50/840-DIM-UNV) (MPS-4-40-LW-C-W-ED-U)
O1	LED 3000K 72W	LOW PROFILE EXTERIOR WALL MOUNTED LUMINAIRE, SURAFEC WALL MOUNTED DOWN LIGHTING, , 8700 LUMENS OUTPUT, 80 CRI.	EATON LUMARK AXCL SERIES	(AXCL8A-W (3000K) - LUMINAIRE COLOUR TO BE VERIFIED BY ARCHITECT DURING SHOP DRAWING REVIEW-120V-PC1)
O2	LED 3000K 72W	LOW PROFILE EXTERIOR WALL MOUNTED LUMINAIRE, SURAFEC WALL MOUNTED DOWN LIGHTING C/W REFRACTIVE LENS, , 8700 LUMENS OUTPUT, 80 CRI.	EATON LUMARK AXCL SERIES	(AXCL8ARL-W (3000K) - LUMINAIRE COLOUR TO BE VERIFIED BY ARCHITECT DURING SHOP DRAWING REVIEW-120V-PC1)
O3	LED 3000K 15W	EXTERIOR 6 INCH DOWNLIGHT RECESSED IN CANOPY, WIDE DISTRIBUTION, 1500 LUMENS OUTPUT, 0-10V DIMMING, 80CRI.	EATON PORTFOLIO SERIES - H.E. WILLIAMS 6DR SERIES - LITHONIA LIGHTING LDN6 SERIES -	(LD6B15D010-EUB10208030-6LBWH1) (6DR-TL-L15-8-30-DIM-UNV-O-W-OF-CS-WET / CC) (LDN6 30 / 15 L06AR LSS MVOLT GZ10)

DRAWING LIST

Sheet Number	Sheet Title
E01	ELECTRICAL COVER SHEET & LUMINAIRE SCHEDULE
E02	SINGLE LINE DIAGRAM
E03	ELECTRICAL SITE PLAN
E09	STAIR SECTIONS WING B
E10	LIGHTING LAYOUT WING B LEVEL 1
E11	LIGHTING LAYOUT WING B LEVEL 2
E12	LIGHTING LAYOUT WING C
E15	LIGHTING CONTROL SCHEMATICS SHEET No.1
E16	LIGHTING CONTROL SCHEMATICS SHEET No.2
E17	LIGHTING CONTROL SCHEMATICS SHEET No.3
E18	LIGHTING CONTROL SCHEMATICS SHEET No.4
E20	POWER LAYOUT WING B LEVEL 1
E21	FIRE ALARM LAYOUT WING B LEVEL 1
E22	MECHANICAL EQUIPMENT WING B LEVEL 1
E23	POWER LAYOUT WING B LEVEL 2
E24	FIRE ALARM LAYOUT WING B LEVEL 2
E25	MECHANICAL EQUIPMENT WING B LEVEL 2
E26	ELECTRICAL LAYOUT WING B MECHANICAL PENTHOUSE
E27	POWER AND FIRE ALARM LAYOUT WING C
E28	MECHANICAL EQUIPMENT WING C
E29	ROOF LAYOUT
E30	LIGHTING CONTROL SCHEDULE & DETAILS
E31	MOTOR STARTER AND CONTROL LIST
E32	FIRE ALARM RISER DIAGRAM
E33	PANEL SCHEDULES - 1 OF 4
E34	PANEL SCHEDULES - 2 OF 4
E35	PANEL SCHEDULES - 3 OF 4
E36	PANEL SCHEDULES - 4 OF 4
DE10	EXISTING POWER AND FIRE ALARM WING B LEVEL 1
DE11	EXISTING POWER AND FIRE ALARM WING B LEVEL 2
DE12	EXISTING ELECTRICAL SYSTEMS WING C
DE13	EXISTING LIGHTING WING B LEVEL 1
DE14	EXISTING LIGHTING WING B LEVEL 2
DE15	SINGLE LINE DEMOLITION

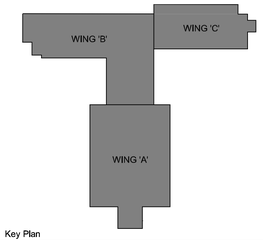

Key Plan

DO NOT SCALE DRAWINGS:

Contractors must check and verify all site conditions. Notify the Owner's Representative in writing before proceeding with the work if discrepancies are evident between the drawings and the site condition. No extras to the contract will be allowed if discrepancies were evident prior to start of work.

UNEXPECTED DISCOVERY OF ASBESTOS:

Where a friable material is discovered during construction, renovations and/or demolition, and it is suspected to contain asbestos, the Contractor must stop all work that may disturb the material. The Contractor shall advise the Owner of the discovery and await instructions from the owner.

A / B — A = Detail number; B = Drawing number where detailed

NO.	ISSUED	BY	DATE
2	ISSUED FOR CONVENIENCE	TA	APR 12, 2019
1	POST-TENDER ADDENDUM N0.1	TA	FEB 26, 2019
0	ISSUED FOR PERMIT & TENDER	TA	NOV 2, 2018

Orientation

Seal

Seal

UNIVERSITY of GUELPH
Design, Engineering & Construction
Physical Resources
Guelph, Ontario, N1G 2W1

Consultant — www.jlrichards.ca
J.L.Richards ENGINEERS · ARCHITECTS · PLANNERS

Project
BUILDING #046
RENOVATIONS

Drawing Title
ELECTRICAL
ELECTRICAL COVER SHEET
& LUMINAIRE SCHEDULE

Project No.
504034

Location
UNIVERSITY OF GUELPH
BUILDING #46

Scale: NTS	Date: APR 12, 2019
Drawn by: AM	Drawing No.
Checked By: HM	E01
Approved By: HM	
JLR #: 27915	

Cad File No. ----

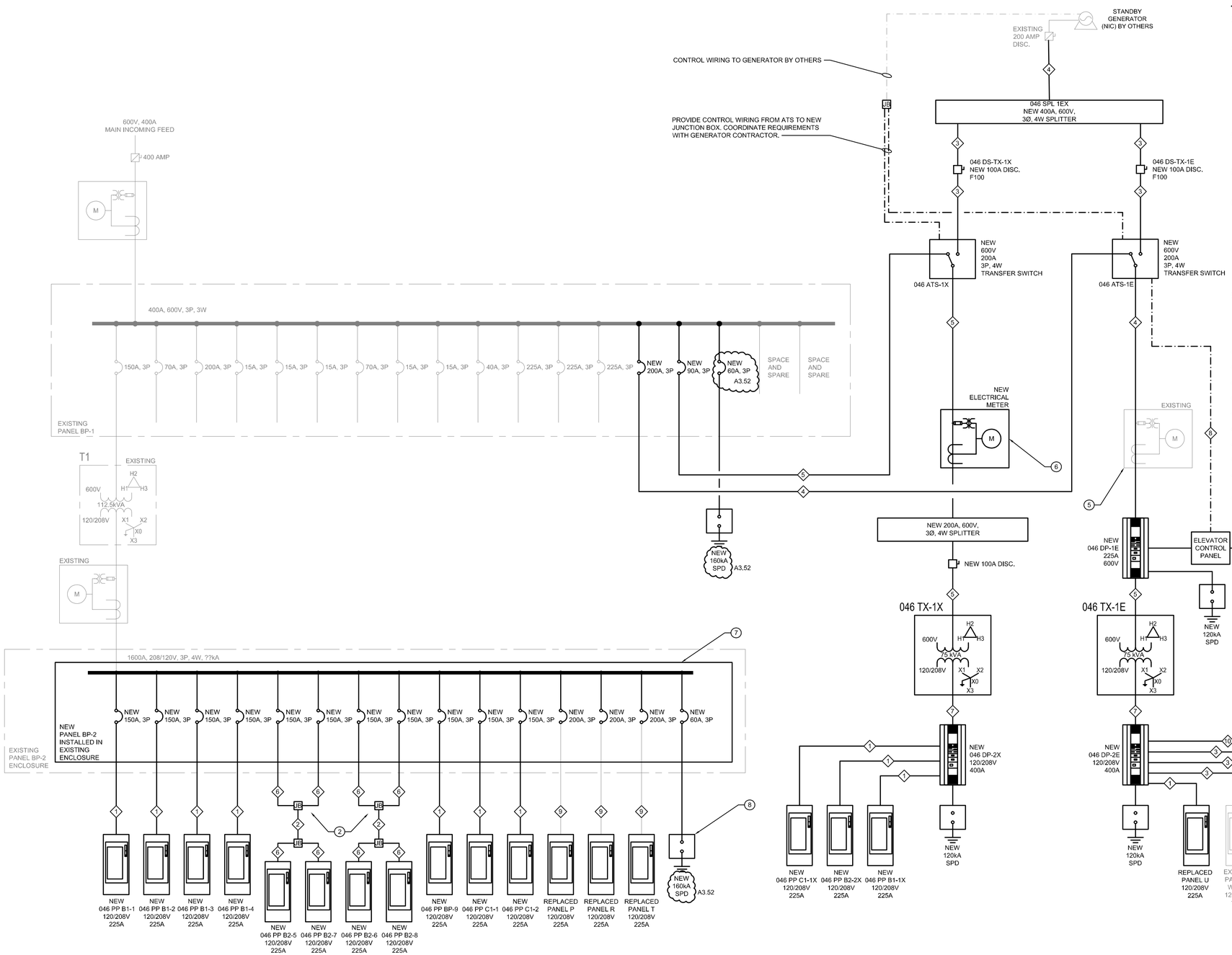

1 E02 SINGLE LINE DIAGRAM

SCALE: N.T.S.

DRAWING NOTES

1. INSTALL NEW MIN. 125A, 4W SPLITTER BOX c/w LUGS AT LOCATION OF EXISTING PANEL EBP1A TO RECONNECT PANELS "X", "Y", AND "EX4".
2. REFER TO DRAWINGS E22 AND E25 FOR CONDUIT ROUTING.
3. COORDINATE WITH THE UNIVERSITY TO SHUTDOWN PANELS EX4, X, AND Y. EXTEND EXISTING PANEL FEEDER TO NLS-DP2 AS INDICATED. PROVIDE SPLICE BOX FOR EACH PANEL FEEDER TO BE EXTENDED AS PER NOTE 1. NEW FEEDERS SHALL BE INSTALLED PRIOR TO SHUTDOWN AND CONNECTED TO THE SPLICE BOX. REROUTE EXISTING FEEDERS TO SPLICE BOX.
4. PANEL BB CIRCUIT FEEDING EXHAUST FAN EX-34 TO REMAIN AND TO BE EXTENDED AS NECESSARY FOR CONNECTION TO NEW CIRCUIT IN NLS-DP2. ALL OTHER PANEL BB CIRCUITS TO BE REMOVED.
5. EXISTING METER SERVING EXISTING EMERGENCY PANEL TO BE RECONNECTED TO NEW EMERGENCY DISTRIBUTION PANEL.
6. PROVIDE NEW SCHNEIDER POWERLOGIC ION8240 ELECTRICAL METER INSTALLED IN METER ENCLOSURE, TO MATCH EXISTING METERS. PROVIDE NETWORK WIRING TIED BACK TO CAMPUS METERING SYSTEM c/w COMMISSIONING AND LICENSING.
7. PROVIDE NEW 1600A, 120/208V PANELBOARD INSTALLED IN EXISTING ENCLOSURE / CUBICLE IN EXISTING PANEL BP-2. COORDINATE WITH EQUIPMENT MANUFACTURER TO RETROFIT NEW PANEL INTO EXISTING ENCLOSURE. MODIFY EXISTING BUS / BREAKER LAYOUT TO SUIT.
8. PROVIDE NEW SURGE PROTECTION DEVICE AS INDICATED, SIZED TO SUIT PANEL. COORDINATE SIZE OF BREAKER WITH MANUFACTURER'S REQUIREMENTS. (TYPICAL)

FEEDER SCHEDULE

1. 4c x 3/0 AWG + GND IN 63mm EMT
2. 8c x 4/0 AWG + 2 x GND IN 91mm EMT (2 FEEDS)
3. 4c x #2 AWG + GND IN 41mm EMT
4. 4c x 4/0 AWG + GND IN 63mm EMT
5. 3c x #3 AWG + GND IN 35mm EMT
6. 4c x 4/0 AWG + GND IN 63mm EMT
7. 4c x 300MCM + GND IN 78mm EMT
8. 2c x #18 AWG IN 21mm EMT
9. RECONNECT EXISTING FEEDER TO NEW BREAKER
10. PROVIDE NEW CONDUIT AND WIRING TO SUIT EXISTING EF-34 FEEDER. CONTRACTOR TO VERIFY FEEDER SIZE AND BREAKER SIZE REQUIRED ON SITE.

LINETYPE LEGEND	
EXISTING	
NEW	————

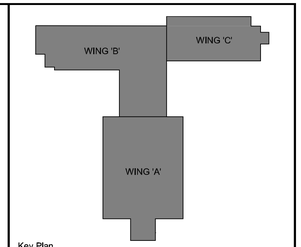

Key Plan

DO NOT SCALE DRAWINGS:

Contractors must check and verify all site conditions. Notify the Owner's Representative in writing before proceeding with the work if discrepancies are evident between the drawings and the site condition. No extras to the contract will be allowed if discrepancies were evident prior to start of work.

UNEXPECTED DISCOVERY OF ASBESTOS:

Where a friable material is discovered during construction, renovations and/or demolition, and it is suspected to contain asbestos, the Contractor must stop all work that may disturb the material. The Contractor shall advise the Owner of the discovery and await instructions from the owner.

A / B — A = Detail number; B = Drawing number where detailed

NO.	ISSUED	BY	DATE
1	ISSUED FOR CONVENIENCE	TA	APR 12, 2019
0	ISSUED FOR PERMIT & TENDER	TA	NOV 2, 2018

Orientation

Seal

Seal

UNIVERSITY of GUELPH
Design, Engineering & Construction
Physical Resources
Guelph, Ontario. N1G 2W1

Consultant
www.jlrichards.ca
J.L.Richards
ENGINEERS · ARCHITECTS · PLANNERS

Project
BUILDING #046
RENOVATIONS

Drawing Title
ELECTRICAL
SINGLE LINE DIAGRAM

Project No.
504034

Location
UNIVERSITY OF GUELPH
BUILDING #46

Scale: NTS	Date: APR 12, 2019
Drawn by: AM	Drawing No.
Checked By: HM	E02
Approved By: HM	
JLR #: 27915	

Cad File No. ----

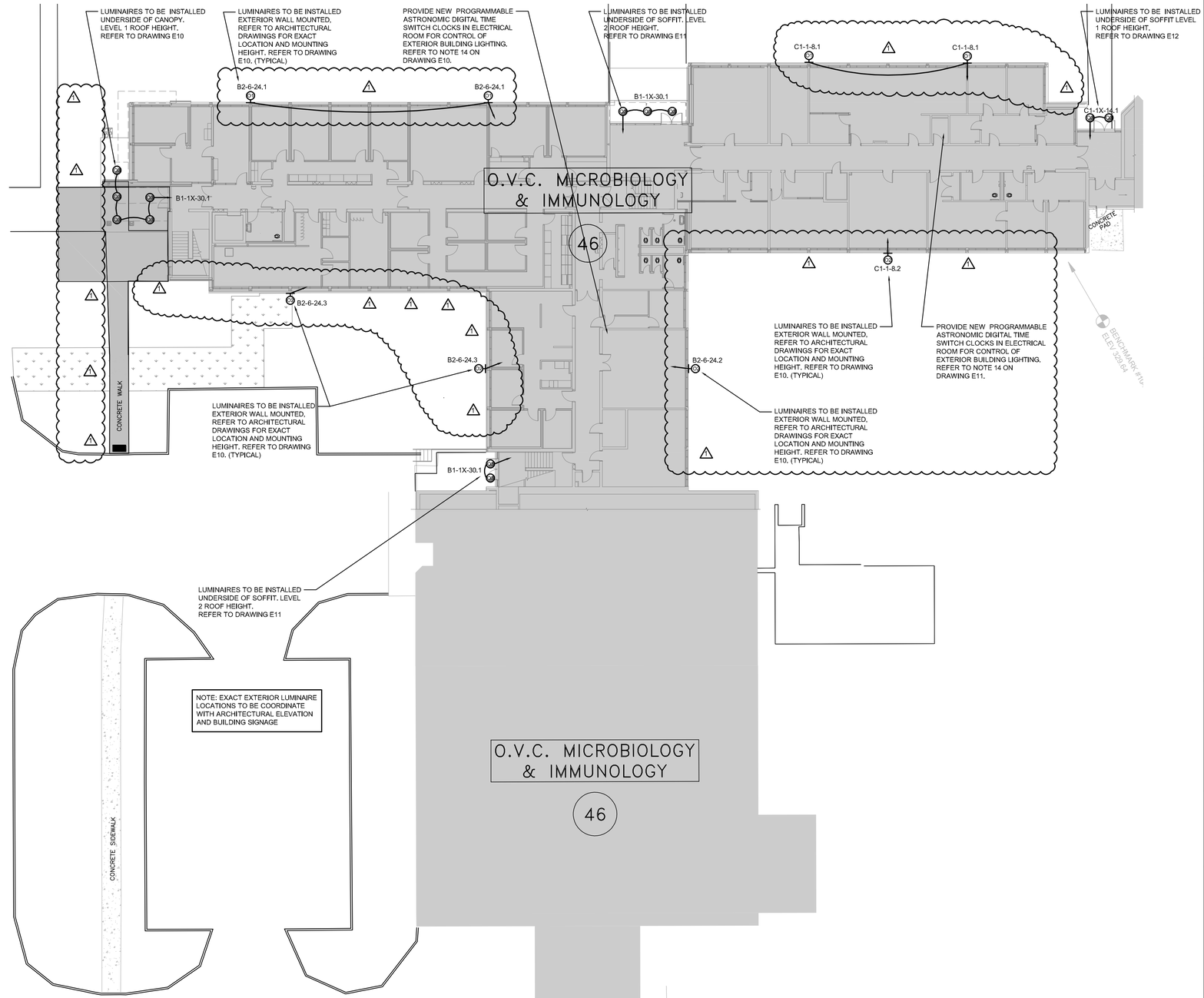

1 / E03 ELECTRICAL SITE PLAN

SCALE: 1:200

0 1 2 5 10 15m

GENERAL NOTES

A. CAREFULLY COORDINATE ALL ELECTRICAL WORK WITH ALL OTHER TRADES ON SITE TO ENSURE NO CONFLICTS OR INTERFERENCES OCCUR.

B. PROVIDE ALL FASTENERS, FITTINGS, JUNCTION, OUTLET, BACKBOXES, CONDUIT, WIRING AND HARDWARE REQUIRED TO ENSURE A COMPLETE AND OPERATIONAL SYSTEM. REFER TO SPECIFICATIONS.

C. WHERE CONDUIT SYSTEMS CROSS BUILDING EXPANSION JOINTS PROVIDE JUNCTION BOXES ON EITHER SIDE OF JOINT C/W METAL FLEX CONDUIT & WIRING SYSTEM TO BRIDGE JOINT AND ALLOW FOR BUILDING MOVEMENT. REFER TO DETAILS ON DRAWINGS AND / OR SPECIFICATIONS.

D. ALL JUNCTION BOX CONDUIT AND WIRING SYSTEMS ARE TO BE CONCEALED IN PARTITIONS WALL FLOOR SLABS AND CEILING SPACES UNLESS NOTED OTHERWISE.

E. COORDINATE ON SITE: DRILL / CUT OPENINGS IN EXISTING PARTITION WALLS, FLOOR SLAB TO FACILITATE INSTALLATION OF ELECTRICAL SYSTEMS. PATCH, REPAIR AND REPAINT ALL OPENINGS TO MATCH EXISTING AND/OR NEW FINISH REQUIREMENTS.

F. SEAL ALL THROUGH WALL, FLOOR SLAB PENETRATIONS WITH APPROVED FIRE STOP SEALANT.

G. PROVIDE LAMACOID NAMEPLATE AND P-TOUCH CIRCUIT IDENTIFICATION ON EQUIPMENT, COVER PLATES, JUNCTION BOXES. REFER TO SPECIFICATION FOR ADDITIONAL INFORMATION.

H. THE WORD "PROVIDE" USED ON THESE DRAWINGS, MEAN THE CONTRACTOR IS RESPONSIBLE TO SUPPLY, INSTALL, WIRE, CONNECT, CONTROL SETUP, TEST, AND COMMISSION EQUIPMENT, DEVICES, AND/OR LUMINAIRES.

I. ALL ELECTRICAL EQUIPMENT, DEVICE OUTLET BOXES TO BE INSTALLED IN SEPARATE STUD SPACES (SEPARATED BY A STUD) AND PREFERABLY ISOLATED BY MIN. 600mm APART WHERE POSSIBLE FOR WALL ERATED STC 45 OR HIGHER. REFER TO DETAIL 3/E20 ON DRAWINGS.

J. EXPOSED ELECTRICAL BOXES IN WALLS RATED STC 50 AND HIGHER TO BE SEALED.

K. REFER TO LUMINAIRE SCHEDULE FOR LIGHTING FIXTURE TYPE AND MOUNTING.

GANG ALL LIGHT SWITCHES TOGETHER WHERE POSSIBLE UNDER ONE (1) COMMON COVER PLATE UNLESS NOTED OTHERWISE.

L. COORDINATE MOUNTING AND INSTALLATION OF EXTERIOR / OUTDOOR MOUNTED LUMINAIRES WITH ARCHITECT AND BUILDING OWNER.

M. ALL LUMINAIRES TO BE CHAINED. USE GALVANIZED COIL CHAIN TO SUPPORT LUMINAIRE(S) TO BUILDING STRUCTURE FROM MINIMUM TWO (2) LOCATIONS. CORNER OF EACH TO BE SUPPORTED. POINT ON CHAINS TO BE SECURED. INSTALLATION TO MEET SEISMIC REQUIREMENTS.

N. ALL LIGHTING FIXTURES NORMAL / EMERGENCY, EXIT LIGHTING TO BE CONNECTED AND SWITCHED AS INDICATED VIA A JUNCTION BOX, CONDUIT AND WIRING SYSTEM AS SPECIFIED.

O. PROVIDE ALL LIGHTING CONTROL WIRING, LINE VOLTAGE (120V), LOW VOLTAGE LIGHTING CIRCUIT, AND CONTROL WIRING VIA CEILING SPACE MOUNTED JUNCTION BOX, CONDUIT AND WIRING SYSTEM TO END DEVICE(S), SENSORS AND / OR MANUAL SWITCHES MAY BE EITHER INDIVIDUALLY WIRED OR WIRED IN TANDEM AS PER LIGHTING CONTROL SCHEDULES. REFER TO LIGHTING CONTROL SCHEDULE AND CONTROL SCHEMATIC DETAILS ON DRAWING E15, E16, E17, E18 AND E30

P. LIGHTING CIRCUIT SWITCHING AS FOLLOWS:
- CIRCUIT (CKT.) AS INDICATED EI "B2-6-2.1" DENOTES: NORMAL POWER PANEL B2-6, CKT. 2, RELAY OR DEVICE SWITCHING POINT 1
- CIRCUIT (CKT.) AS INDICATED EI "B1-1X-30.1" DENOTES: EMERGENCY POWER PANEL B1-1X, CKT. 30, RELAY OR DEVICE SWITCHING POINT 1 .
- NOTE: EXTERIOR DEVICE SWITCHING POINTS TO BE MADE VIA PROGRAMMABLE DIGITAL TIME CLOCK(S).

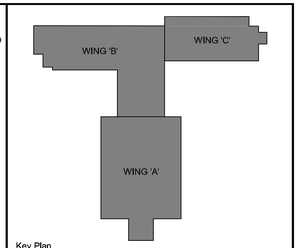

Key Plan

DO NOT SCALE DRAWINGS:

Contractors must check and verify all site conditions. Notify the Owner's Representative in writing before proceeding with the work if discrepancies are evident between the drawings and the site condition. No extras to the contract will be allowed if discrepancies were evident prior to start of work.

UNEXPECTED DISCOVERY OF ASBESTOS:

Where a friable material is discovered during construction, renovations and/or demolition, and it is suspected to contain asbestos, the Contractor must stop all work that may disturb the material. The Contractor shall advise the Owner of the discovery and await instructions from the owner.

A / B — A = Detail number; B = Drawing number where detailed

NO.	ISSUED	BY	DATE
2	ISSUED FOR CONVENIENCE	TA	APR 12, 2019
1	POST-TENDER ADDENDUM N0.1	TA	FEB 26, 2019
0	ISSUED FOR PERMIT & TENDER	TA	NOV 2, 2018

Orientation

Seal

Seal

UNIVERSITY of GUELPH
Design, Engineering & Construction
Physical Resources
Guelph, Ontario. N1G 2W1

Consultant — www.jlrichards.ca
J.L.Richards ENGINEERS · ARCHITECTS · PLANNERS

Project
BUILDING #046
RENOVATIONS

Drawing Title
ELECTRICAL
ELECTRICAL SITE PLAN

Project No.
504034

Location
UNIVERSITY OF GUELPH
BUILDING #46

Scale: AS INDICATED	Date: APR 12, 2019
Drawn by: AM	Drawing No.
Checked By: HM	E03
Approved By: HM	
JLR #: 27915	

Cad File No. ----

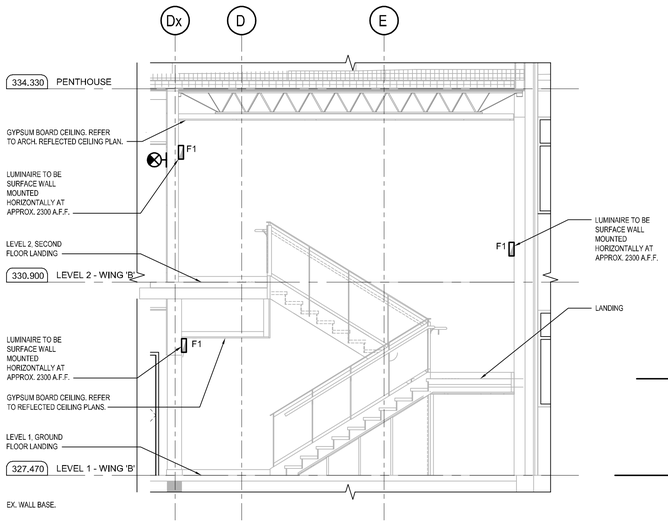

1 E09 STAIR SECTION - STAIRWELL ST101

SCALE = 1:50

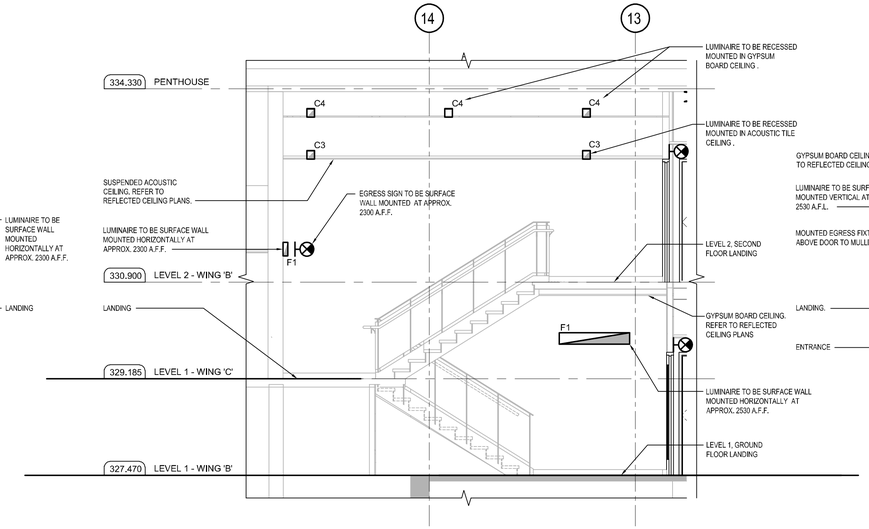

2 E09 STAIR SECTION - STAIRWELL ST102

SCALE = 1:50

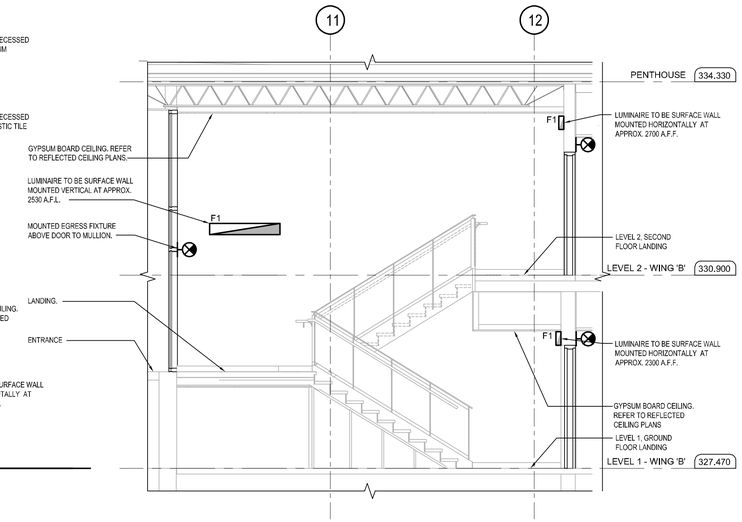

3 E09 STAIR SECTION - STAIRWELL ST103

SCALE = 1:50

1

H1 SERIES LUMINAIRE SCHEDULE

TYPE	LAMP	DESCRIPTION	MANUFACTURER (MODEL NUMBER)	
H1-A RM. 143				
H1-B RM. 143	LED 3500K	LED LINEAR LUMINAIRE RECESSED IN WOOD FEATURE CEILING, SHAPE LINEAR LENGTH APPROX 2286mm LONG AS SHOWN ON DRAWINGS, 120V, 0-10V DIMMING.	NEO-RAY DEFINE 3 SERIES -	S123DR-S-560D-835-FES- (NOTE TRIMLESS INSTALLATION, WOOD PANEL CEILING SYSTEM APPROX. 2286mm LONG, VERIFY LENGTH WITH ARCH.WOOD FEATURE CEILING SYSTEM)-1-U-DD-F-W
H1-C RM. C108	LED 3500K	LED LINEAR LUMINAIRE RECESSED IN WOOD FEATURE CEILING, SHAPE L, LENGTH APPROX 863mm & 1143mm LONG AS SHOWN ON DRAWINGS, 120V, 0-10V DIMMING.	NEO-RAY DEFINE 3 SERIES -	S123DR-S-560D-835-FES- (JOIN KIT , CORNER KIT/ NOTE TRIMLESS INSTALLATION, WOOD PANEL CEILING SYSTEM SHAPE L, LENGTH APPROX 863mm X 1143mm LONG, VERIFY LENGTH WITH ARCH.WOOD FEATURE CEILING SYSTEM)-1-U-DD-F-W
H1-D RM. C106	LED 3500K	LED LINEAR LUMINAIRE RECESSED IN WOOD FEATURE CEILING, SHAPE LINEAR LENGTH APPROX 7645mm LONG AS SHOWN ON DRAWINGS, 120V, 0-10V DIMMING.	NEO-RAY DEFINE 3 SERIES -	S123DR-S-560D-835-FES- (NOTE TRIMLESS INSTALLATION, WOOD PANEL CEILING SYSTEM APPROX. 7645mm LONG, VERIFY LENGTH WITH ARCH.WOOD FEATURE CEILING SYSTEM)-1-U-DD-F-W
H1-E RM. C104	LED 3500K	LED LINEAR LUMINAIRE RECESSED IN WOOD FEATURE CEILING, SHAPE LINEAR LENGTH APPROX 7340mm LONG AS SHOWN ON DRAWINGS, 120V, 0-10V DIMMING.	NEO-RAY DEFINE 3 SERIES -	S123DR-S-560D-835-FES- (NOTE TRIMLESS INSTALLATION, WOOD PANEL CEILING SYSTEM APPROX. 7340mm LONG, VERIFY LENGTH WITH ARCH.WOOD FEATURE CEILING SYSTEM)-1-U-DD-F-W
H1-F RM. 236				
H1-G (EM. RM. C202	LED 3500K	LED LINEAR LUMINAIRE RECESSED IN WOOD FEATURE CEILING, SHAPE LINEAR LENGTH APPROX 3530mm LONG AS SHOWN ON DRAWINGS, 120V, 0-10V DIMMING.	NEO-RAY DEFINE 3 SERIES -	S123DR-S-560D-835-FES- (NOTE TRIMLESS INSTALLATION, WOOD PANEL CEILING SYSTEM APPROX. 3530mm LONG, VERIFY LENGTH WITH ARCH.WOOD FEATURE CEILING SYSTEM)-1-U-DD-F-W
H1-H RM. C201	LED 3500K	LED LINEAR LUMINAIRE RECESSED IN WOOD FEATURE CEILING, SHAPE LINEAR LENGTH APPROX 6350mm LONG AS SHOWN ON DRAWINGS, 120V, 0-10V DIMMING.	NEO-RAY DEFINE 3 SERIES -	S123DR-S-560D-835-FES- (NOTE TRIMLESS INSTALLATION, WOOD PANEL CEILING SYSTEM APPROX. 6350mm LONG, VERIFY LENGTH WITH ARCH.WOOD FEATURE CEILING SYSTEM)-1-U-DD-F-W
H1-J RM. C201	LED 3500K	LED LINEAR LUMINAIRE RECESSED IN WOOD FEATURE CEILING, SHAPE LINEAR LENGTH APPROX 5334mm LONG AS SHOWN ON DRAWINGS, 120V, 0-10V DIMMING.	NEO-RAY DEFINE 3 SERIES -	S123DR-S-560D-835-FES- (NOTE TRIMLESS INSTALLATION, WOOD PANEL CEILING SYSTEM APPROX. 5334mm LONG, VERIFY LENGTH WITH ARCH.WOOD FEATURE CEILING SYSTEM)-1-U-DD-F-W
H1-K RM. C206	LED 3500K	LED LINEAR LUMINAIRE RECESSED IN WOOD FEATURE CEILING, SHAPE LINEAR LENGTH APPROX 4877mm LONG AS SHOWN ON DRAWINGS, 120V, 0-10V DIMMING.	NEO-RAY DEFINE 3 SERIES -	S123DR-S-560D-835-FES- (NOTE TRIMLESS INSTALLATION, WOOD PANEL CEILING SYSTEM APPROX. 4877mm LONG, VERIFY LENGTH WITH ARCH.WOOD FEATURE CEILING SYSTEM)-1-U-DD-F-W .
H1-L RM. 217	LED 3500K	LED LINEAR LUMINAIRE RECESSED IN WOOD FEATURE CEILING, SHAPE L, LENGTH APPROX 1194mm & 2413mm LONG AS SHOWN ON DRAWINGS, 120V, 0-10V DIMMING.	NEO-RAY DEFINE 3 SERIES -	S123DR-S-560D-835-FES- (JOIN KIT , CORNER KIT/ NOTE TRIMLESS INSTALLATION, WOOD PANEL CEILING SYSTEM SHAPE L, LENGTH APPROX 1194 X 2413mm LONG, VERIFY LENGTH WITH ARCH.WOOD FEATURE CEILING SYSTEM)-1-U-DD-F-W
H1-M RM. 217	LED 3500K	LED LINEAR LUMINAIRE RECESSED IN WOOD FEATURE CEILING, SHAPE LINEAR LENGTH APPROX 1701mm LONG AS SHOWN ON DRAWINGS, 120V, 0-10V DIMMING.	NEO-RAY DEFINE 3 SERIES -	S123DR-S-560D-835-FES- (NOTE TRIMLESS INSTALLATION, WOOD PANEL CEILING SYSTEM APPROX. 1701mm LONG, VERIFY LENGTH WITH ARCH.WOOD FEATURE CEILING SYSTEM)-1-U-DD-F-W

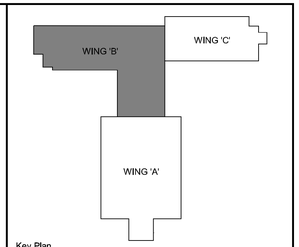

Key Plan

DO NOT SCALE DRAWINGS:

Contractors must check and verify all site conditions. Notify the Owner's Representative in writing before proceeding with the work if discrepancies are evident between the drawings and the site condition. No extras to the contract will be allowed if discrepancies were evident prior to start of work.

UNEXPECTED DISCOVERY OF ASBESTOS:

Where a friable material is discovered during construction, renovations and/or demolition, and it is suspected to contain asbestos, the Contractor must stop all work that may disturb the material. The Contractor shall advise the Owner of the discovery and await instructions from the owner.

A / B — A = Detail number; B = Drawing number where detailed

NO.	ISSUED	BY	DATE
2	ISSUED FOR CONVENIENCE	TA	APR 12, 2019
1	POST-TENDER ADDENDUM N0.1	TA	FEB 26, 2019
0	ISSUED FOR PERMIT & TENDER	TA	NOV 2, 2018

Orientation

Seal

Seal

UNIVERSITY of GUELPH
Design, Engineering & Construction
Physical Resources
Guelph, Ontario. N1G 2W1

Consultant www.jlrichards.ca
J.L.Richards ENGINEERS · ARCHITECTS · PLANNERS

Project
BUILDING #046
RENOVATIONS

Drawing Title
ELECTRICAL
STAIR SECTIONS WING B

Project No.
504034

Location
UNIVERSITY OF GUELPH
BUILDING #46

Scale N.T.S.
Date APR 12, 2019
Drawn by M.C.D.
Drawing No. E09
Checked By H.M.
Approved By H.M.
JLR # 27915

Cad File No. ----

GENERAL NOTES

A. CAREFULLY COORDINATE ALL ELECTRICAL WORK WITH ALL OTHER TRADES ON SITE TO ENSURE NO CONFLICTS OR INTERFERENCES OCCUR.

B. PROVIDE ALL FASTENERS, FITTINGS, JUNCTION, OUTLET, BACKBOXES, CONDUIT, WIRING AND HARDWARE REQUIRED TO ENSURE A COMPLETE AND OPERATIONAL SYSTEM. REFER TO SPECIFICATIONS.

C. WHERE CONDUIT SYSTEMS CROSS BUILDING EXPANSION JOINTS PROVIDE JUNCTION BOXES ON EITHER SIDE OF JOINT C/W METAL FLEX CONDUIT & WIRING SYSTEM TO BRIDGE JOINT AND ALLOW FOR BUILDING MOVEMENT. REFER TO DETAILS ON DRAWINGS AND / OR SPECIFICATIONS.

D. ALL JUNCTION BOX CONDUIT AND WIRING SYSTEMS ARE TO BE CONCEALED IN PARTITIONS WALL FLOOR SLABS AND CEILING SPACES UNLESS NOTED OTHERWISE.

E. PROVIDE CHANNEL SUPPORT HANGERS, MIN. 19mm THREADED ROD TRAPEZE HANGER ASSEMBLIES FOR MOUNTING ALL JUNCTION BOX CONDUIT, RACEWAY SYSTEMS. SUPPORT SYSTEM HANGERS TO BE SPACED AT NOT MORE THAT 2400mm APART UNLESS NOTED OTHERWISE. REFER TO SPECIFICATIONS.

F. ALL ELECTRICAL RACEWAY / SUPPORT SYSTEMS TO BE SECURED TO MEET SEISMIC REQUIREMENTS.

G. COORDINATE EXACT LOCATION OF OUTLETS/DEVICES WITH ARCHITECTURAL DRAWINGS, MILLWORK DETAILS FANCOM DRAWINGS AND EQUIPMENT REQUIREMENTS.

H. MOUNTING HEIGHT OF OUTLETS, DEVICES, SWITCHES, CONTROLS IS FROM FINISHED FLOOR TO CENTER-LINE OF EQUIPMENT UNLESS NOTED OTHERWISE. REFER TO ELECTRICAL SPECIFICATION.

I. COORDINATE ON SITE: DRILL / CUT OPENINGS IN EXISTING PARTITION WALLS, FLOOR SLAB TO FACILITATE INSTALLATION OF ELECTRICAL SYSTEMS. PATCH, REPAIR AND REPAINT ALL OPENINGS TO MATCH EXISTING AND/OR NEW FINISH REQUIREMENTS.

J. SEAL ALL THROUGH WALL, FLOOR SLAB PENETRATIONS WITH APPROVED FIRE STOP SEALANT.

K. PROVIDE LAMACOID NAMEPLATE AND P-TOUCH CIRCUIT IDENTIFICATION ON EQUIPMENT, COVER PLATES, JUNCTION BOXES. REFER TO SPECIFICATION FOR ADDITIONAL INFORMATION.

L. THE WORD "PROVIDE" USED ON THESE DRAWINGS, MEAN THE CONTRACTOR IS RESPONSIBLE TO SUPPLY, INSTALL, WIRE, CONNECT, CONTROL SETUP, TEST, AND COMMISSION EQUIPMENT, DEVICES, AND/OR LUMINAIRES.

M. ALL ELECTRICAL EQUIPMENT, DEVICE OUTLET BOXES TO BE INSTALLED IN SEPARATE STUD SPACES (SEPARATED BY A STUD) AND PREFERABLY ISOLATED BY MIN. 600mm APART WHERE POSSIBLE FOR WALL ERATED STC 45 OR HIGHER. REFER TO DETAIL 3/E20 ON DRAWINGS.

N. EXPOSED ELECTRICAL BOXES IN WALLS RATED STC 50 AND HIGHER TO BE SEALED.

O. REFER TO LUMINAIRE SCHEDULE FOR LIGHTING FIXTURE TYPE AND MOUNTING.

P. GANG ALL LIGHT SWITCHES TOGETHER WHERE POSSIBLE UNDER ONE (1) COMMON COVER PLATE UNLESS NOTED OTHERWISE.

Q. COORDINATE MOUNTING AND INSTALLATION OF EXTERIOR / OUTDOOR MOUNTED LUMINAIRES WITH ARCHITECT AND BUILDING OWNER.

R. ALL LUMINAIRES TO BE CHAINED. USE GALVANIZED COIL CHAIN TO SUPPORT LUMINAIRE(S) TO BUILDING STRUCTURE FROM MINIMUM TWO (2) LOCATIONS. CORNER OF EACH TO BE SUPPORTED. POINT ON CHAINS TO BE SECURED. INSTALLATION TO MEET SEISMIC REQUIREMENTS.

S. ALL LIGHTING FIXTURES NORMAL / EMERGENCY, EXIT LIGHTING TO BE CONNECTED AND SWITCHED AS INDICATED VIA A JUNCTION BOX, CONDUIT AND WIRING SYSTEM AS SPECIFIED.

T. PROVIDE ALL LIGHTING CONTROL WIRING, LINE VOLTAGE (120V), LOW VOLTAGE LIGHTING CIRCUIT, AND CONTROL WIRING VIA CEILING SPACE MOUNTED JUNCTION BOX, CONDUIT AND WIRING SYSTEM TO END DEVICE(S). SENSORS AND / OR MANUAL SWITCHES MAY BE EITHER INDIVIDUALLY WIRED OR WIRED IN TANDEM AS PER LIGHTING CONTROL SCHEDULES. REFER TO LIGHTING CONTROL SCHEDULE AND CONTROL SCHEMATIC DETAILS ON DRAWING E15, E16, E17, E18 AND E30

U. LIGHTING CIRCUIT SWITCHING AS FOLLOWS:
- CIRCUIT (CKT.) AS INDICATED EI "B2-6-2.1" DENOTES: NORMAL POWER PANEL B2-6, CKT. 2, RELAY OR DEVICE SWITCHING POINT 1
- CIRCUIT (CKT.) AS INDICATED EI: "B2-6-4.1.1" DENOTES: NORMAL POWER PANEL B2-6, CKT. 4. LIGHTING CONTROL RELAY 1, DEVICE SWITCHING POINT 1.
- CIRCUIT (CKT.) AS INDICATED "B1-1X-36" DENOTES: EMERGENCY POWER PANEL B1-1X, CKT. 36 (NON-MANUAL SWITCHED CIRCUIT AND/OR UN-SWITCHED CIRCUIT TO LUMINAIRE WITH BUILT-IN ON/OFF/DIMMING CONTROL).
- CIRCUIT (CKT.) AS INDICATED EI: "B1-1X-37.1 & (2.1.1)" DENOTES: EMERGENCY POWER PANEL B1-1X, CKT. 37. LIGHTING CONTROL RELAY 1, & (2.1.1) DENOTES LUMINAIRE TO BE PROGRAM CONTROLLED TO OPERATE ON / OFF / DIMMING WITH OTHER LOCAL LIGHTING CIRCUIT IN SAME ROOM AS PER LIGHTING CONTROL SCHEMATIC DETAILS.
- NOTE: INTERIOR DEVICE SWITCHING POINT ARE TO BE MADE VIA, LINE VOLTAGE SWITCHES, OCCUPANCY AND/OR VACANCY SENSORS WHERE INDICATED. LOCAL PROGRAMMABLE LIGHTING ROOM CONTROLLERS WITH BUILT-IN RELAYS CONTROLLED VIA LOW VOLTAGE SWITCHES, OCCUPANCY AND/OR VACANCY SENSORS WHERE INDICATED. EXTERIOR DEVICE SWITCHING POINTS TO BE MADE VIA PROGRAMMABLE DIGITAL TIME CLOCK(S).

A SYMBOL DENOTES LIGHTING CONTROL SCHEMATIC "A". REFER TO LIGHTING CONTROL SCHEMATIC DETAILS ON DRAWINGS E15, E16, E17, E18

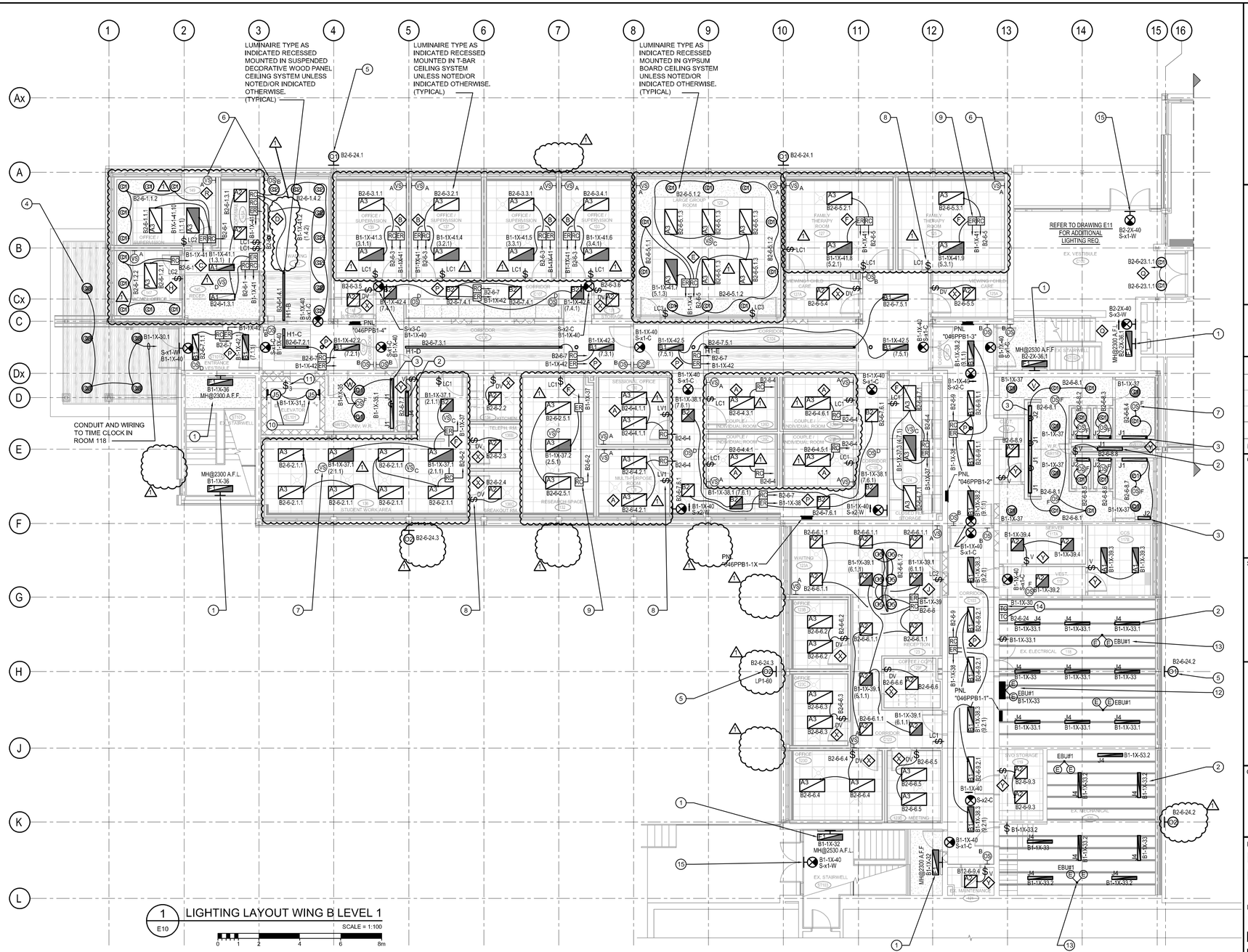

1 / E10 LIGHTING LAYOUT WING B LEVEL 1

SCALE = 1:100

DRAWING NOTES

1. PROVIDE LUMINAIRE TYPE AS INDICATED, SURFACE WALL MOUNT IN STAIRWELL REFER TO STAIR DETAILS ON DRAWING E09. UNLESS NOTED OTHERWISE. (TYPICAL)
2. PROVIDE LUMINAIRE TYPE AS INDICATED, MOUNT SUSPENDED AT APPROX 2400mm A.F.F. FROM EXPOSED BUILDING STRUCTURE (OWSJ) C/W AC90 WIRING FROM JB SYSTEM TO LUMINAIRE. COORDINATE EXACT LOCATION AND HEIGHT WITH INSTALLATION OF ALL OTHER BUILDING SYSTEMS. PROVIDE STEEL SUPPORT CHANNEL AND TRAPEZE HANGER ASSEMBLIES SECURED TO BUILDING STRUCTURE FOR MOUNTING. (TYPICAL).
3. PROVIDE LUMINAIRE TYPE AS INDICATED, SURFACE MOUNT IN WASHROOM GYPSUM BOARD CEILING VALANCE. REFER TO ARCHITECTURAL DRAWINGS FOR DETAILS. (TYPICAL)
4. PROVIDE EXTERIOR TYPE LUMINAIRE AS INDICATED, FLUSH MOUNT IN NEW EXTERIOR CANOPY/SOFFIT. REFER TO ARCHITECTURAL DRAWINGS FOR EXACT LOCATION AND MOUNTING HEIGHT. PROVIDE RECESSED OUTLET BOX, CONDUIT & WIRING SYSTEM, ROUTE BACK TO NEW EXTERIOR LIGHTING DIGITAL TIME CLOCK CONTROLLER IN ELECT. 118. (TYPICAL)
5. PROVIDE EXTERIOR TYPE WALL / FACADE MOUNTED LUMINAIRE AS INDICATED, REFER TO ARCHITECTURAL DRAWINGS FOR EXACT LOCATION AND MOUNTING HEIGHT. PROVIDE RECESSED OUTLET BOX, CONDUIT & WIRING SYSTEM, ROUTE BACK TO NEW EXTERIOR LIGHTING DIGITAL TIME CLOCK CONTROLLER IN ELECT. 118. (TYPICAL)
6. PROVIDE LIGHTING CONTROL SENSOR TYPE AS INDICATED, CORNER WALL MOUNTED AT 100mm BELOW FINISHED CEILING C/W CONCEALED RECESSED OUTLET BOX, CONDUIT & WIRING SYSTEMS. (TYPICAL)
7. PROVIDE LIGHTING CONTROL SENSOR TYPE AS INDICATED, CEILING MOUNTED C/W CONCEALED RECESSED OUTLET BOX, CONDUIT & WIRING SYSTEMS. (TYPICAL)
8. PROVIDE LIGHTING CONTROL SWITCH TYPE AS INDICATED, FLUSH WALL MOUNTED AT 1100mm A.F.F. C/W CONCEALED RECESSED OUTLET BOX, CONDUIT & WIRING SYSTEMS. (TYPICAL)
9. PROVIDE LOCAL REMOTE CEILING SPACE MOUNTED DIGITAL LIGHTING MANAGEMENT ROOM CONTROLLERS, EMERGENCY BYPASS RELAY CONTROLLERS C/W OUTLET BOXES, CONDUIT AND WIRING SYSTEMS. COORDINATE ACCESSIBLE LOCATION IN CEILING SPACE ON SITE WITH INSTALLATION OF ALL OTHER BUILDING SYSTEMS.
10. PROVIDE LUMINAIRE AS INDICATED, SURFACE WALL MOUNTED VERTICALLY IN ELEVATOR PIT. COORDINATE EXACT LOCATION AND MOUNTING WITH ELEVATOR SYSTEM, SHOP DRAWINGS AND ELEVATOR CONTRACTOR ON SITE. (TYPICAL)
11. PROVIDE WEATHER PROOF TYPE TOGGLE SWITCH, SURFACE MOUNT IN ELEVATOR PIT AT APPROX. 1200mm ABOVE BOTTOM OF PIT. COORDINATE EXACT LOCATION AND MOUNTING WITH ELEVATOR SYSTEM, SHOP DRAWINGS AND ELEVATOR CONTRACTOR ON SITE.
12. PROVIDE EMERGENCY BATTERY UNIT (TWO (2) INTEGRAL 6W LED HEADS 120-12V, TEST SWITCH, AC & DC TERMINAL BLOCKS AND PLUG-IN CORD SET LUMACELL RGS SERIES WITH MIN. 90 MINUTES OF WATTAGE CAPACITY. PROVIDE DUPLEX RECEPTACLE BESIDE EBU CIRCUIT AS INDICATED. (TYPICAL)
13. PROVIDE EMERGENCY REMOTE MOUNTED INTEGRAL HEADS WITH CANOPY, TO BE CONDUIT STEM MOUNTED AT APPROX 2500mm A.F.F. C/W JUNCTION BOX CONDUIT AND WIRING SYSTEM. EBU CIRCUIT AS INDICATED. (TYPICAL)
14. PROVIDE NEW INTERMATIC ASTRONOMIC DIGITAL TIME SWITCH MODEL ET8415CR WITH UP TO FOUR (4) PROGRAMMABLE SWITCHING CIRCUITS, OVER RIDE PUSH BUTTON. 100 HOUR SUPER CAPACITOR TO MAINTAIN PROGRAMMING IN POWER OUTAGE AND NEMA 3R ENCLOSURE. SURFACE WALL MOUNT IN ELECT. ROOM 105. CIRCUIT B2-24 AND/OR B1-1X-30 AS INDICATED. WIRE AND CONNECT NEW EXTERIOR WALL MOUNTED LUMINAIRES AND/OR CANOPY AND PATCHWAY LUMINAIRES TO TIME CLOCKS. PROGRAM TIME CLOCK TO ENERGIZE EXTERIOR LIGHTING AT DUSK AND DE-ENERGIZE LIGHTING AT PRESET TIME TO MEET ASHRAE 90.1 AND SB-10 LIGHTING STANDARDS WITH BUILDING OWNER.
15. PROVIDE NEW EXIT SIGN SURFACE MOUNTED ABOVE DOOR. ROUTE NEW CONDUIT AND WIRING THROUGH MULLION FRAME TO SIGN. COORDINATE EXACT LOCATION ON SITE. REFER TO ARCHITECTURAL DRAWINGS FOR ADDITIONAL INFORMATION FOR GLAZING WALL.

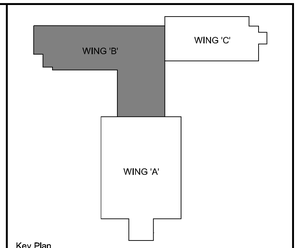

Key Plan

DO NOT SCALE DRAWINGS:

Contractors must check and verify all site conditions. Notify the Owner's Representative in writing before proceeding with the work if discrepancies are evident between the drawings and the site condition. No extras to the contract will be allowed if discrepancies were evident prior to start of work.

UNEXPECTED DISCOVERY OF ASBESTOS:

Where a friable material is discovered during construction, renovations and/or demolition, and it is suspected to contain asbestos, the Contractor must stop all work that may disturb the material. The Contractor shall advise the Owner of the discovery and await instructions from the owner.

A = Detail number
B = Drawing number where detailed

NO.	ISSUED	BY	DATE
2	ISSUED FOR CONVENIENCE	TA	APR 12, 2019
1	POST-TENDER ADDENDUM N0.1	TA	FEB 26, 2019
0	ISSUED FOR PERMIT & TENDER	TA	NOV 2, 2018

Orientation

Seal

Seal

UNIVERSITY of GUELPH
Design, Engineering & Construction
Physical Resources
Guelph, Ontario, N1G 2W1

Consultant
www.jlrichards.ca
J.L.Richards
ENGINEERS · ARCHITECTS · PLANNERS

Project
BUILDING #046
RENOVATIONS

Drawing Title
ELECTRICAL
LIGHTING LAYOUT WING B
LEVEL 1

Project No.
504034

Location
UNIVERSITY OF GUELPH
BUILDING #46

Scale: AS INDICATED	Date: APR 12, 2019
Drawn by: AM	Drawing No.
Checked By: HM	E10
Approved By: HM	
JLR #: 27915	

Cad File No. ----

GENERAL NOTES

A. CAREFULLY COORDINATE ALL ELECTRICAL WORK WITH ALL OTHER TRADES ON SITE TO ENSURE NO CONFLICTS OR INTERFERENCES OCCUR.

B. PROVIDE ALL FASTENERS, FITTINGS, JUNCTION, OUTLET, BACKBOXES, CONDUIT, WIRING AND HARDWARE REQUIRED TO ENSURE A COMPLETE AND OPERATIONAL SYSTEM. REFER TO SPECIFICATIONS.

C. WHERE CONDUIT SYSTEMS CROSS BUILDING EXPANSION JOINTS PROVIDE JUNCTION BOXES ON EITHER SIDE OF JOINT C/W METAL FLEX CONDUIT & WIRING SYSTEM TO BRIDGE JOINT AND ALLOW FOR BUILDING MOVEMENT. REFER TO DETAILS ON DRAWINGS AND / OR SPECIFICATIONS.

D. ALL JUNCTION BOX CONDUIT AND WIRING SYSTEMS ARE TO BE CONCEALED IN PARTITIONS WALL FLOOR SLABS AND CEILING SPACES UNLESS NOTED OTHERWISE.

E. PROVIDE CHANNEL SUPPORT HANGERS, MIN. 19mm THREADED ROD TRAPEZE HANGER ASSEMBLIES FOR MOUNTING ALL JUNCTION BOX CONDUIT, RACEWAY SYSTEMS. SUPPORT SYSTEM HANGERS TO BE SPACED AT NOT MORE THAT 2400mm APART UNLESS NOTED OTHERWISE. REFER TO SPECIFICATIONS.

F. ALL ELECTRICAL RACEWAY / SUPPORT SYSTEMS TO BE SECURED TO MEET SEISMIC REQUIREMENTS.

G. COORDINATE EXACT LOCATION OF OUTLETS/DEVICES WITH ARCHITECTURAL DRAWINGS, MILLWORK DETAILS FANCOM DRAWINGS AND EQUIPMENT REQUIREMENTS.

H. MOUNTING HEIGHT OF OUTLETS, DEVICES, SWITCHES, CONTROLS IS FROM FINISHED FLOOR TO CENTER-LINE OF EQUIPMENT UNLESS NOTED OTHERWISE. REFER TO ELECTRICAL SPECIFICATION.

I. COORDINATE ON SITE: DRILL / CUT OPENINGS IN EXISTING PARTITION WALLS, FLOOR SLAB TO FACILITATE INSTALLATION OF ELECTRICAL SYSTEMS. PATCH, REPAIR AND REPAINT ALL OPENINGS TO MATCH EXISTING AND/OR NEW FINISH REQUIREMENTS.

J. SEAL ALL THROUGH WALL, FLOOR SLAB PENETRATIONS WITH APPROVED FIRE STOP SEALANT.

K. PROVIDE LAMACOID NAMEPLATE AND P-TOUCH CIRCUIT IDENTIFICATION ON EQUIPMENT, COVER PLATES, JUNCTION BOXES. REFER TO SPECIFICATION FOR ADDITIONAL INFORMATION.

L. THE WORD "PROVIDE" USED ON THESE DRAWINGS, MEAN THE CONTRACTOR IS RESPONSIBLE TO SUPPLY, INSTALL, WIRE, CONNECT, CONTROL SETUP, TEST, AND COMMISSION EQUIPMENT, DEVICES, AND/OR LUMINAIRES.

M. ALL ELECTRICAL EQUIPMENT, DEVICE OUTLET BOXES TO BE INSTALLED IN SEPARATE STUD SPACES (SEPARATED BY A STUD) AND PREFERABLY ISOLATED BY MIN. 600mm APART WHERE POSSIBLE FOR WALL ERATED STC 45 OR HIGHER. REFER TO DETAIL 3/E20 ON DRAWINGS.

N. EXPOSED ELECTRICAL BOXES IN WALLS RATED STC 50 AND HIGHER TO BE SEALED.

O. REFER TO LUMINAIRE SCHEDULE FOR LIGHTING FIXTURE TYPE AND MOUNTING.

P. GANG ALL LIGHT SWITCHES TOGETHER WHERE POSSIBLE UNDER ONE (1) COMMON COVER PLATE UNLESS NOTED OTHERWISE.

Q. COORDINATE MOUNTING AND INSTALLATION OF EXTERIOR / OUTDOOR MOUNTED LUMINAIRES WITH ARCHITECT AND BUILDING OWNER.

R. ALL LUMINAIRES TO BE CHAINED. USE GALVANIZED COIL CHAIN TO SUPPORT LUMINAIRE(S) TO BUILDING STRUCTURE FROM MINIMUM TWO (2) LOCATIONS. CORNER OF EACH TO BE SUPPORTED. POINT ON CHAINS TO BE SECURED. INSTALLATION TO MEET SEISMIC REQUIREMENTS.

S. ALL LIGHTING FIXTURES NORMAL / EMERGENCY, EXIT LIGHTING TO BE CONNECTED AND SWITCHED AS INDICATED VIA A JUNCTION BOX, CONDUIT AND WIRING SYSTEM AS SPECIFIED.

T. PROVIDE ALL LIGHTING CONTROL WIRING, LINE VOLTAGE (120V), LOW VOLTAGE LIGHTING CIRCUIT, AND CONTROL WIRING VIA CEILING SPACE MOUNTED JUNCTION BOX, CONDUIT AND WIRING SYSTEM TO END DEVICE(S). SENSORS AND / OR MANUAL SWITCHES MAY BE EITHER INDIVIDUALLY WIRED OR WIRED IN TANDEM AS PER LIGHTING CONTROL SCHEDULES. REFER TO LIGHTING CONTROL SCHEDULE AND CONTROL SCHEMATIC DETAILS ON DRAWING E15, E16, E17, E18 AND E30

U. LIGHTING CIRCUIT SWITCHING AS FOLLOWS:
- CIRCUIT (CKT.) AS INDICATED EI "B2-6-2.1" DENOTES: NORMAL POWER PANEL B2-6, CKT. 2, RELAY OR DEVICE SWITCHING POINT 1
- CIRCUIT (CKT.) AS INDICATED EI: "B2-6-4.1.1" DENOTES: NORMAL POWER PANEL B2-6, CKT. 4, LIGHTING CONTROL RELAY 1, DEVICE SWITCHING POINT 1.
- CIRCUIT (CKT.) AS INDICATED "B1-1X-36" DENOTES: EMERGENCY POWER PANEL B1-1X, CKT. 36 (NON-MANUAL SWITCHED CIRCUIT AND/OR UN-SWITCHED CIRCUIT TO LUMINAIRE WITH BUILT-IN ON/OFF/DIMMING CONTROL).
- CIRCUIT (CKT.) AS INDICATED EI: "B1-1X-37.1 & (2.1.1)" DENOTES: EMERGENCY POWER PANEL B1-1X, CKT. 37, LIGHTING CONTROL RELAY 1, & (2.1.1) DENOTES LUMINAIRE TO BE PROGRAM CONTROLLED TO OPERATE ON / OFF / DIMMING WITH OTHER LOCAL LIGHTING CIRCUIT IN SAME ROOM AS PER LIGHTING CONTROL SCHEMATIC DETAILS.
- NOTE: INTERIOR DEVICE SWITCHING POINT ARE TO BE MADE VIA, LINE VOLTAGE SWITCHES, OCCUPANCY AND/OR VACANCY SENSORS WHERE INDICATED. LOCAL PROGRAMMABLE LIGHTING ROOM CONTROLLERS WITH BUILT-IN RELAYS CONTROLLED VIA LOW VOLTAGE SWITCHES, OCCUPANCY AND/OR VACANCY SENSORS WHERE INDICATED. EXTERIOR DEVICE SWITCHING POINTS TO BE MADE VIA PROGRAMMABLE DIGITAL TIME CLOCK(S).

(A) SYMBOL DENOTES LIGHTING CONTROL SCHEMATIC "A". REFER TO LIGHTING CONTROL SCHEMATIC DETAILS ON DRAWINGS E15, E16, E17, E18

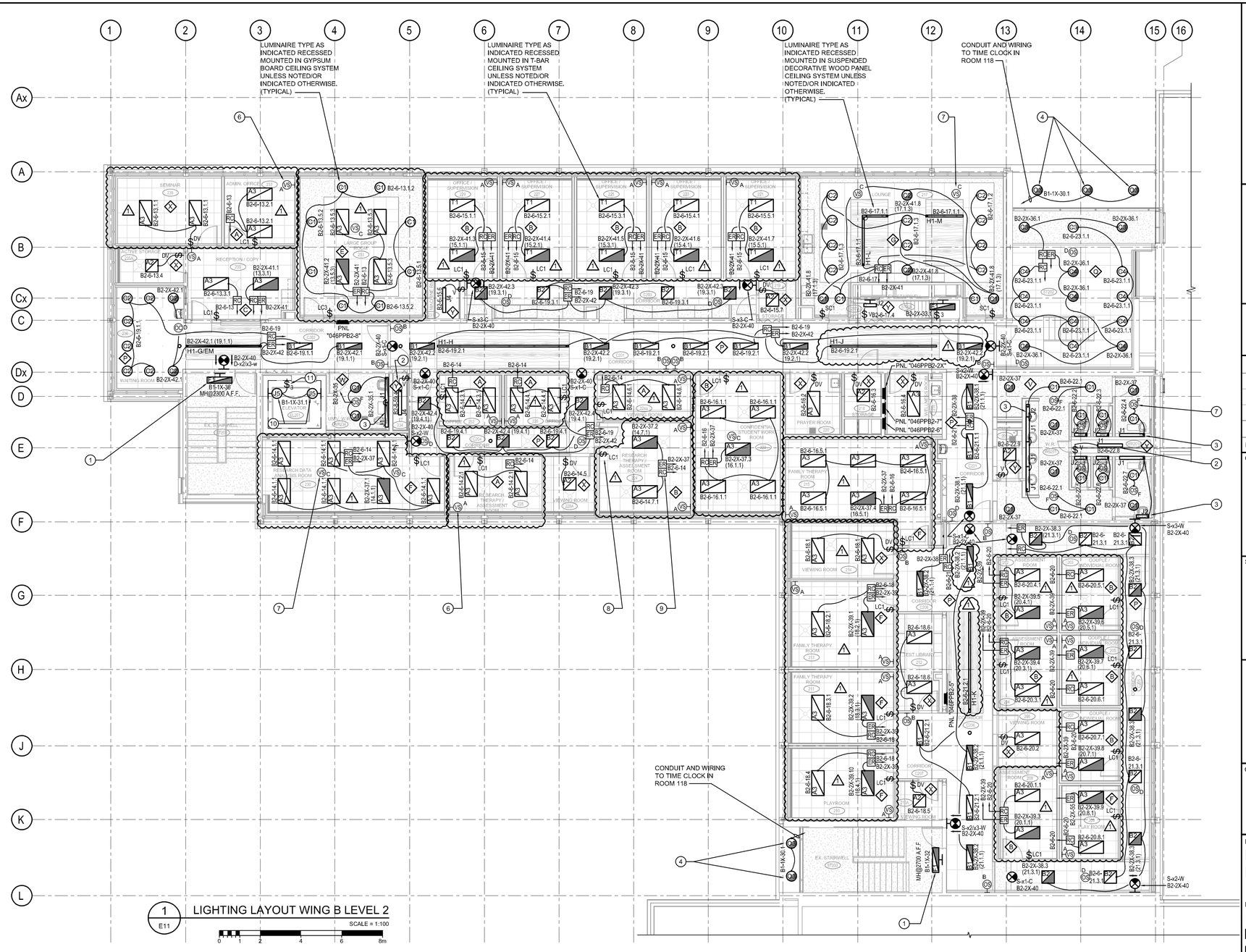

1 / E11 LIGHTING LAYOUT WING B LEVEL 2

SCALE = 1:100

DRAWING NOTES

1. PROVIDE LUMINAIRE TYPE AS INDICATED, SURFACE WALL MOUNT IN STAIRWELL REFER TO STAIR DETAILS ON DRAWING E09. UNLESS NOTED OTHERWISE. (TYPICAL)
2. PROVIDE LUMINAIRE TYPE AS INDICATED, MOUNT SUSPENDED AT APPROX 2400mm A.F.F. FROM EXPOSED BUILDING STRUCTURE (OWSJ) C/W AC90 WIRING FROM JB SYSTEM TO LUMINAIRE. COORDINATE EXACT LOCATION AND HEIGHT WITH INSTALLATION OF ALL OTHER BUILDING SYSTEMS. PROVIDE STEEL SUPPORT CHANNEL AND TRAPEZE HANGER ASSEMBLIES SECURED TO BUILDING STRUCTURE FOR MOUNTING. (TYPICAL).
3. PROVIDE LUMINAIRE TYPE AS INDICATED, SURFACE MOUNT IN WASHROOM GYPSUM BOARD CEILING VALANCE. REFER TO ARCHITECTURAL DRAWINGS FOR DETAILS. (TYPICAL)
4. PROVIDE EXTERIOR TYPE LUMINAIRE AS INDICATED, FLUSH MOUNT IN NEW EXTERIOR CANOPY/SOFFIT. REFER TO ARCHITECTURAL DRAWINGS FOR EXACT LOCATION AND MOUNTING HEIGHT. PROVIDE RECESSED OUTLET BOX, CONDUIT & WIRING SYSTEM, ROUTE BACK TO NEW EXTERIOR LIGHTING DIGITAL TIME CLOCK CONTROLLER IN ELECT. 118. (TYPICAL)
5. NOT- USED.
6. PROVIDE LIGHTING CONTROL SENSOR TYPE AS INDICATED, CORNER WALL MOUNTED AT 100mm BELOW FINISHED CEILING C/W CONCEALED RECESSED OUTLET BOX, CONDUIT & WIRING SYSTEMS. (TYPICAL)
7. PROVIDE LIGHTING CONTROL SENSOR TYPE AS INDICATED, CEILING MOUNTED C/W CONCEALED RECESSED OUTLET BOX, CONDUIT & WIRING SYSTEMS. (TYPICAL)
8. PROVIDE LIGHTING CONTROL SWITCH TYPE AS INDICATED, FLUSH WALL MOUNTED AT 1100mm A.F.F. C/W CONCEALED RECESSED OUTLET BOX, CONDUIT & WIRING SYSTEMS. (TYPICAL)
9. PROVIDE LOCAL REMOTE CEILING SPACE MOUNTED DIGITAL LIGHTING MANAGEMENT ROOM CONTROLLERS, EMERGENCY BYPASS RELAY CONTROLLERS C/W OUTLET BOXES, CONDUIT AND WIRING SYSTEMS. COORDINATE ACCESSIBLE LOCATION IN CEILING SPACE ON SITE WITH INSTALLATION OF ALL OTHER BUILDING SYSTEMS.
10. PROVIDE LUMINAIRE AS INDICATED, SURFACE WALL MOUNTED VERTICALLY IN ELEVATOR SHAFT AT APPROX 2000mm BELOW TOP OF SHAFT. COORDINATE EXACT LOCATION AND MOUNTING WITH ELEVATOR SYSTEM, SHOP DRAWINGS AND ELEVATOR CONTRACTOR ON SITE. (TYPICAL)
11. PROVIDE WEATHER PROOF TYPE TOGGLE SWITCH, SURFACE MOUNT IN ELEVATOR PIT AT APPROX. 1200mm ABOVE BOTTOM OF PIT. COORDINATE EXACT LOCATION AND MOUNTING WITH ELEVATOR SYSTEM, SHOP DRAWINGS AND ELEVATOR CONTRACTOR ON SITE.
12. TO 15. NOT USED.

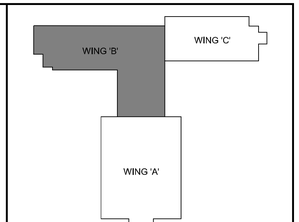

Key Plan

DO NOT SCALE DRAWINGS:

Contractors must check and verify all site conditions. Notify the Owner's Representative in writing before proceeding with the work if discrepancies are evident between the drawings and the site condition. No extras to the contract will be allowed if discrepancies were evident prior to start of work.

UNEXPECTED DISCOVERY OF ASBESTOS:

Where a friable material is discovered during construction, renovations and/or demolition, and it is suspected to contain asbestos, the Contractor must stop all work that may disturb the material. The Contractor shall advise the Owner of the discovery and await instructions from the owner.

A / B — A = Detail number; B = Drawing number where detailed

NO.	ISSUED	BY	DATE
2	ISSUED FOR CONVENIENCE	TA	APR 12, 2019
1	POST-TENDER ADDENDUM N0.1	TA	FEB 26, 2019
0	ISSUED FOR PERMIT & TENDER	TA	NOV 2, 2018

Orientation

Seal

Seal

UNIVERSITY of GUELPH
Design, Engineering & Construction
Physical Resources
Guelph, Ontario, N1G 2W1

Consultant
www.jlrichards.ca
J.L.Richards
ENGINEERS · ARCHITECTS · PLANNERS

Project
BUILDING #046
RENOVATIONS

Drawing Title
ELECTRICAL
LIGHTING LAYOUT WING B
LEVEL 2

Project No.
504034

Location
UNIVERSITY OF GUELPH
BUILDING #46

Scale: AS INDICATED	Date: APR 12, 2019
Drawn by: AM	Drawing No. E11
Checked By: HM	
Approved By: HM	
JLR #: 27915	

Cad File No. ----

GENERAL NOTES

A. CAREFULLY COORDINATE ALL ELECTRICAL WORK WITH ALL OTHER TRADES ON SITE TO ENSURE NO CONFLICTS OR INTERFERENCES OCCUR.

B. PROVIDE ALL FASTENERS, FITTINGS, JUNCTION. OUTLET, BACKBOXES, CONDUIT, WIRING AND HARDWARE REQUIRED TO ENSURE A COMPLETE AND OPERATIONAL SYSTEM. REFER TO SPECIFICATIONS.

C. WHERE CONDUIT SYSTEMS CROSS BUILDING EXPANSION JOINTS PROVIDE JUNCTION BOXES ON EITHER SIDE OF JOINT C/W METAL FLEX CONDUIT & WIRING SYSTEM TO BRIDGE JOINT AND ALLOW FOR BUILDING MOVEMENT. REFER TO DETAILS ON DRAWINGS AND / OR SPECIFICATIONS.

D. ALL JUNCTION BOX CONDUIT AND WIRING SYSTEMS ARE TO BE CONCEALED IN PARTITIONS WALL FLOOR SLABS AND CEILING SPACES UNLESS NOTED OTHERWISE.

E. PROVIDE CHANNEL SUPPORT HANGERS, MIN. 19mm THREADED ROD TRAPEZE HANGER ASSEMBLIES FOR MOUNTING ALL JUNCTION BOX CONDUIT, RACEWAY SYSTEMS. SUPPORT SYSTEM HANGERS TO BE SPACED AT NOT MORE THAT 2400mm APART UNLESS NOTED OTHERWISE. REFER TO SPECIFICATIONS.

F. ALL ELECTRICAL RACEWAY / SUPPORT SYSTEMS TO BE SECURED TO MEET SEISMIC REQUIREMENTS.

G. COORDINATE EXACT LOCATION OF OUTLETS/DEVICES WITH ARCHITECTURAL DRAWINGS, MILLWORK DETAILS FANCOM DRAWINGS AND EQUIPMENT REQUIREMENTS.

H. MOUNTING HEIGHT OF OUTLETS, DEVICES, SWITCHES, CONTROLS IS FROM FINISHED FLOOR TO CENTER-LINE OF EQUIPMENT UNLESS NOTED OTHERWISE. REFER TO ELECTRICAL SPECIFICATION.

I. COORDINATE ON SITE: DRILL / CUT OPENINGS IN EXISTING PARTITION WALLS, FLOOR SLAB TO FACILITATE INSTALLATION OF ELECTRICAL SYSTEMS, PATCH, REPAIR AND REPAINT ALL OPENINGS TO MATCH EXISTING AND/OR NEW FINISH REQUIREMENTS.

J. SEAL ALL THROUGH WALL, FLOOR SLAB PENETRATIONS WITH APPROVED FIRE STOP SEALANT.

K. PROVIDE LAMACOID NAMEPLATE AND P-TOUCH CIRCUIT IDENTIFICATION ON EQUIPMENT, COVER PLATES, JUNCTION BOXES. REFER TO SPECIFICATION FOR ADDITIONAL INFORMATION.

L. THE WORD "PROVIDE" USED ON THESE DRAWINGS, MEAN THE CONTRACTOR IS RESPONSIBLE TO SUPPLY, INSTALL, WIRE, CONNECT, CONTROL SETUP, TEST, AND COMMISSION EQUIPMENT, DEVICES, AND/OR LUMINAIRES.

M. ALL ELECTRICAL EQUIPMENT, DEVICE OUTLET BOXES TO BE INSTALLED IN SEPARATE STUD SPACES (SEPARATED BY A STUD) AND PREFERABLY ISOLATED BY MIN. 600mm APART WHERE POSSIBLE FOR WALL ERATED STC 45 OR HIGHER. REFER TO DETAIL 3/E20 ON DRAWINGS.

N. EXPOSED ELECTRICAL BOXES IN WALLS RATED STC 50 AND HIGHER TO BE SEALED.

O. REFER TO LUMINAIRE SCHEDULE FOR LIGHTING FIXTURE TYPE AND MOUNTING.

P. GANG ALL LIGHT SWITCHES TOGETHER WHERE POSSIBLE UNDER ONE (1) COMMON COVER PLATE UNLESS NOTED OTHERWISE.

Q. COORDINATE MOUNTING AND INSTALLATION OF EXTERIOR / OUTDOOR MOUNTED LUMINAIRES WITH ARCHITECT AND BUILDING OWNER.

R. ALL LUMINAIRES TO BE CHAINED. USE GALVANIZED COIL CHAIN TO SUPPORT LUMINAIRE(S) TO BUILDING STRUCTURE FROM MINIMUM TWO (2) LOCATIONS. CORNER OF EACH TO BE SUPPORTED. POINT ON CHAINS TO BE SECURED. INSTALLATION TO MEET SEISMIC REQUIREMENTS.

S. ALL LIGHTING FIXTURES NORMAL / EMERGENCY, EXIT LIGHTING TO BE CONNECTED AND SWITCHED AS INDICATED VIA A JUNCTION BOX, CONDUIT AND WIRING SYSTEM AS SPECIFIED.

T. PROVIDE ALL LIGHTING CONTROL WIRING, LINE VOLTAGE (120V), LOW VOLTAGE LIGHTING CIRCUIT, AND CONTROL WIRING VIA CEILING SPACE MOUNTED JUNCTION BOX, CONDUIT AND WIRING SYSTEM TO END DEVICE(S). SENSORS AND / OR MANUAL SWITCHES MAY BE EITHER INDIVIDUALLY WIRED OR WIRED IN TANDEM AS PER LIGHTING CONTROL SCHEDULES. REFER TO LIGHTING CONTROL SCHEDULE AND CONTROL SCHEMATIC DETAILS ON DRAWING E15, E16, E17, E18 AND E30

U. LIGHTING CIRCUIT SWITCHING AS FOLLOWS:
- CIRCUIT (CKT.) AS INDICATED EI "B2-6-2.1" DENOTES: NORMAL POWER PANEL B2-6, CKT. 2. RELAY OR DEVICE SWITCHING POINT 1
- CIRCUIT (CKT.) AS INDICATED EI: "B2-6-4.1.1" DENOTES: NORMAL POWER PANEL B2-6, CKT. 4. LIGHTING CONTROL RELAY 1, DEVICE SWITCHING POINT 1.
- CIRCUIT (CKT.) AS INDICATED "B1-1X-36" DENOTES: EMERGENCY POWER PANEL B1-1X, CKT. 36 (NON-MANUAL SWITCHED CIRCUIT AND/OR UN-SWITCHED CIRCUIT TO LUMINAIRE WITH BUILT-IN ON/OFF/DIMMING CONTROL).
- CIRCUIT (CKT.) AS INDICATED EI: "B1-1X-37.1 & (2.1.1)" DENOTES: EMERGENCY POWER PANEL B1-1X, CKT. 37, LIGHTING CONTROL RELAY 1, & (2.1.1) DENOTES LUMINAIRE TO BE PROGRAM CONTROLLED TO OPERATE ON / OFF / DIMMING WITH OTHER LOCAL LIGHTING CIRCUIT IN SAME ROOM AS PER LIGHTING CONTROL SCHEMATIC DETAILS.
- NOTE: INTERIOR DEVICE SWITCHING POINT ARE TO BE MADE VIA, LINE VOLTAGE SWITCHES, OCCUPANCY AND/OR VACANCY SENSORS WHERE INDICATED. LOCAL PROGRAMMABLE LIGHTING ROOM CONTROLLERS WITH BUILT-IN RELAYS CONTROLLED VIA LOW VOLTAGE SWITCHES, OCCUPANCY AND/OR VACANCY SENSORS WHERE INDICATED. EXTERIOR DEVICE SWITCHING POINTS TO BE MADE VIA PROGRAMMABLE DIGITAL TIME CLOCK(S).

A SYMBOL DENOTES LIGHTING CONTROL SCHEMATIC "A", REFER TO LIGHTING CONTROL SCHEMATIC DETAILS ON DRAWINGS E15, E16, E17, E18

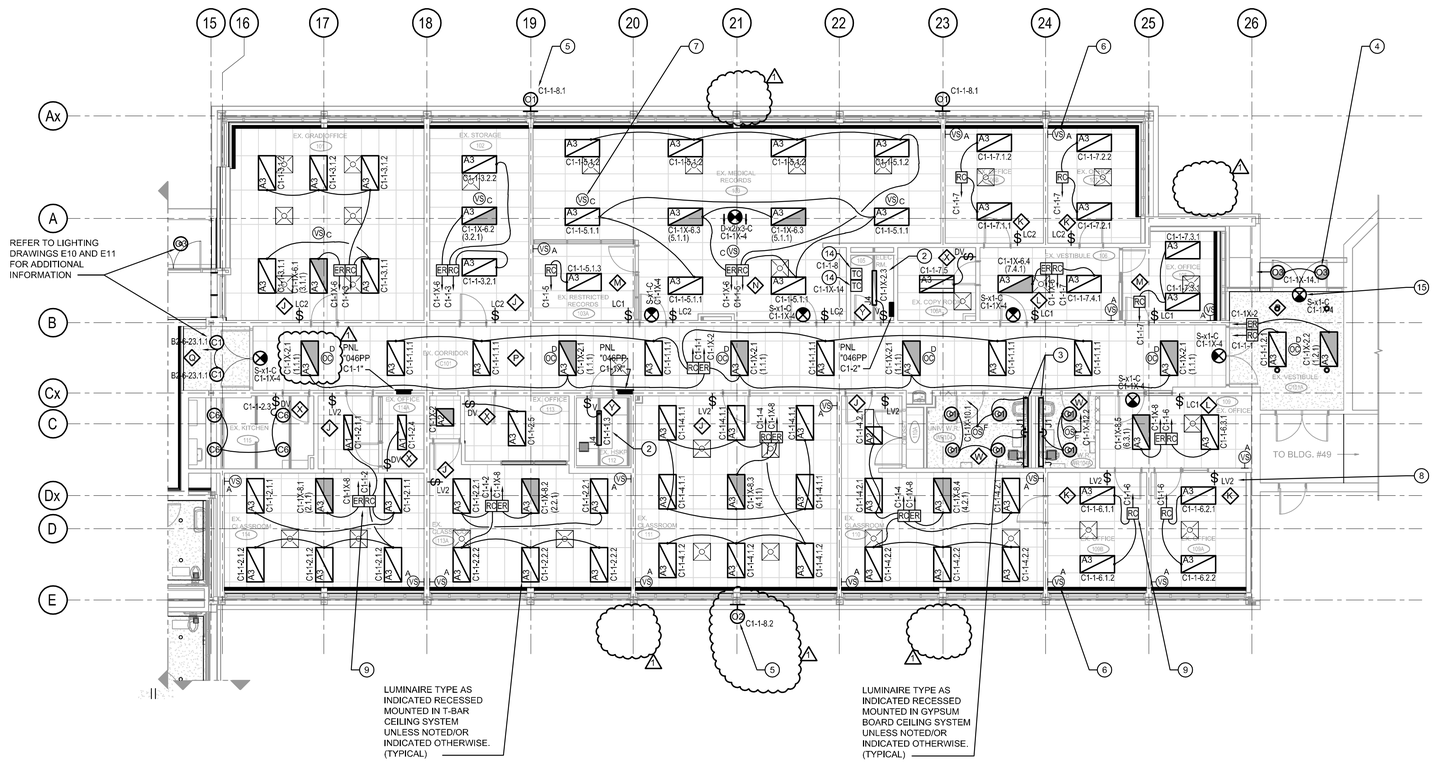

1 / E12 LIGHTING LAYOUT WING C LEVEL 1

SCALE = 1:100

DRAWING NOTES

1. NOT USED.
2. PROVIDE LUMINAIRE TYPE AS INDICATED, MOUNT SUSPENDED AT APPROX 2400mm A.F.F. FROM EXPOSED BUILDING STRUCTURE (OWSJ) C/W AC90 WIRING FROM JB SYSTEM TO LUMINAIRE. COORDINATE EXACT LOCATION AND HEIGHT WITH INSTALLATION OF ALL OTHER BUILDING SYSTEMS. PROVIDE STEEL SUPPORT CHANNEL AND TRAPEZE HANGER ASSEMBLIES SECURED TO BUILDING STRUCTURE FOR MOUNTING. (TYPICAL).
3. PROVIDE LUMINAIRE TYPE AS INDICATED, SURFACE MOUNT IN WASHROOM GYPSUM BOARD CEILING VALANCE. REFER TO ARCHITECTURAL DRAWINGS FOR DETAILS. (TYPICAL)
4. PROVIDE EXTERIOR TYPE LUMINAIRE AS INDICATED, FLUSH MOUNT IN NEW EXTERIOR CANOPY/SOFFIT. REFER TO ARCHITECTURAL DRAWINGS FOR EXACT LOCATION AND MOUNTING HEIGHT. PROVIDE RECESSED OUTLET BOX, CONDUIT & WIRING SYSTEM, ROUTE BACK TO NEW EXTERIOR LIGHTING DIGITAL TIME CLOCK CONTROLLER IN ELECT. 105. (TYPICAL)
5. PROVIDE EXTERIOR TYPE WALL / FACADE MOUNTED LUMINAIRE AS INDICATED, REFER TO ARCHITECTURAL DRAWINGS FOR EXACT LOCATION AND MOUNTING HEIGHT. PROVIDE RECESSED OUTLET BOX, CONDUIT & WIRING SYSTEM, ROUTE BACK TO NEW EXTERIOR LIGHTING DIGITAL TIME CLOCK CONTROLLER IN ELECT. 105. (TYPICAL)
6. PROVIDE LIGHTING CONTROL SENSOR TYPE AS INDICATED, CORNER WALL MOUNTED AT 100mm BELOW FINISHED CEILING C/W CONCEALED RECESSED OUTLET BOX, CONDUIT & WIRING SYSTEMS. (TYPICAL)
7. PROVIDE LIGHTING CONTROL SENSOR TYPE AS INDICATED, CEILING MOUNTED C/W CONCEALED RECESSED OUTLET BOX, CONDUIT & WIRING SYSTEMS. (TYPICAL)
8. PROVIDE LIGHTING CONTROL SWITCH TYPE AS INDICATED, FLUSH WALL MOUNTED AT 1100mm A.F.F. C/W CONCEALED RECESSED OUTLET BOX, CONDUIT & WIRING SYSTEMS. (TYPICAL)
9. PROVIDE LOCAL REMOTE CEILING SPACE MOUNTED DIGITAL LIGHTING MANAGEMENT ROOM CONTROLLERS, EMERGENCY BYPASS RELAY CONTROLLERS C/W OUTLET BOXES, CONDUIT AND WIRING SYSTEMS. COORDINATE ACCESSIBLE LOCATION IN CEILING SPACE ON SITE WITH INSTALLATION OF ALL OTHER BUILDING SYSTEMS.
10. TO 13. NOT USED.
14. PROVIDE NEW INTERMATIC ASTRONOMIC DIGITAL TIME SWITCH MODEL ET8415CR WITH UP TO FOUR (4) PROGRAMMABLE SWITCHING CIRCUITS, OVER RIDE PUSH BUTTON, 100 HOUR SUPER CAPACITOR TO MAINTAIN PROGRAMMING IN POWER OUTAGE AND NEMA 3R ENCLOSURE. SURFACE WALL MOUNT IN ELECT. ROOM 105. CIRCUIT C1-1-8 OR C1-1X-14 AS INDICATED. WIRE AND CONNECT NEW EXTERIOR WALL MOUNTED LUMINAIRES AND/OR CANOPY LUMINAIRES TO TIME CLOCKS. PROGRAM TIME CLOCK TO ENERGIZE EXTERIOR LIGHTING AT DUSK AND DE-ENERGIZE LIGHTING AT PRESET TIME TO MEET ASHRAE 90.1 AND SB-10 LIGHTING STANDARDS WITH BUILDING OWNER.
15. PROVIDE NEW EXIT SIGN SURFACE MOUNTED ABOVE DOOR. ROUTE NEW CONDUIT AND WIRING THROUGH MULLION FRAME TO SIGN. COORDINATE EXACT LOCATION ON SITE. REFER TO ARCHITECTURAL DRAWINGS FOR ADDITIONAL INFORMATION FOR GLAZING WALL.

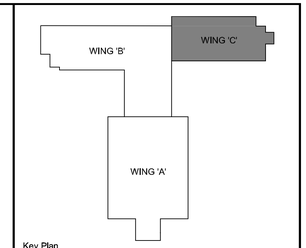

Key Plan

DO NOT SCALE DRAWINGS:

Contractors must check and verify all site conditions. Notify the Owner's Representative in writing before proceeding with the work if discrepancies are evident between the drawings and the site condition. No extras to the contract will be allowed if discrepancies were evident prior to start of work.

UNEXPECTED DISCOVERY OF ASBESTOS:

Where a friable material is discovered during construction, renovations and/or demolition, and it is suspected to contain asbestos, the Contractor must stop all work that may disturb the material. The Contractor shall advise the Owner of the discovery and await instructions from the owner.

A / B — A = Detail number; B = Drawing number where detailed

NO.	ISSUED	BY	DATE
2	ISSUED FOR CONVENIENCE	TA	APR 12, 2019
1	POST-TENDER ADDENDUM N0.1	TA	FEB 26, 2019
0	ISSUED FOR PERMIT & TENDER	TA	NOV 2, 2018

Orientation

Seal

Seal

UNIVERSITY of GUELPH
Design, Engineering & Construction
Physical Resources
Guelph, Ontario. N1G 2W1

Consultant www.jlrichards.ca
J.L.Richards ENGINEERS · ARCHITECTS · PLANNERS

Project
BUILDING #046
RENOVATIONS

Drawing Title
LIGHTING LAYOUT WING C

Project No.
504034

Location
UNIVERSITY OF GUELPH
BUILDING #46

Scale: AS INDICATED	Date: APR 12, 2019
Drawn by: AM	Drawing No. E12
Checked By: HM	
Approved By: HM	
JLR #: 27915	

Cad File No. ----

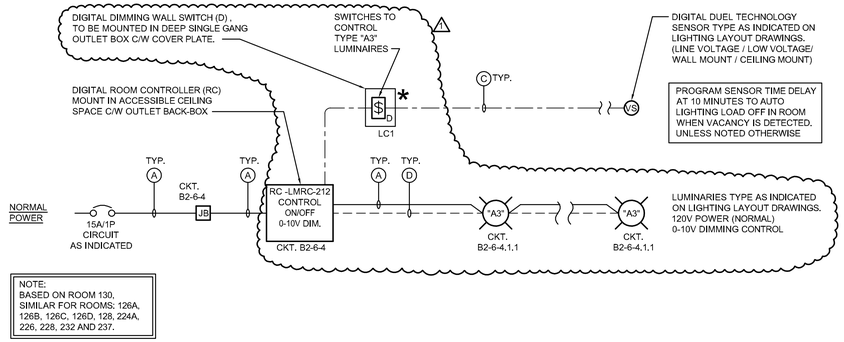

A E15 LIGHTING CONTROL SCHEMATIC "A"

SCALE = N.T.S.

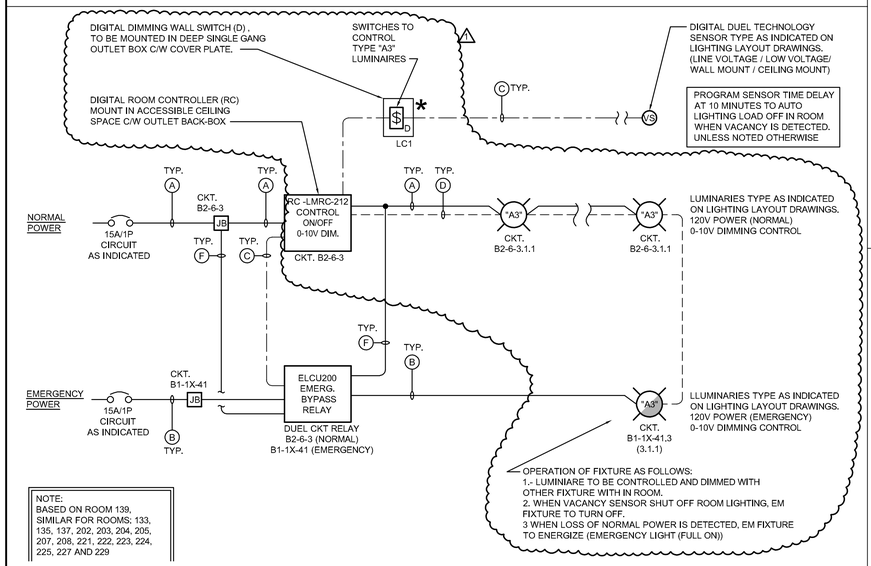

B E15 LIGHTING CONTROL SCHEMATIC "B"

SCALE = N.T.S.

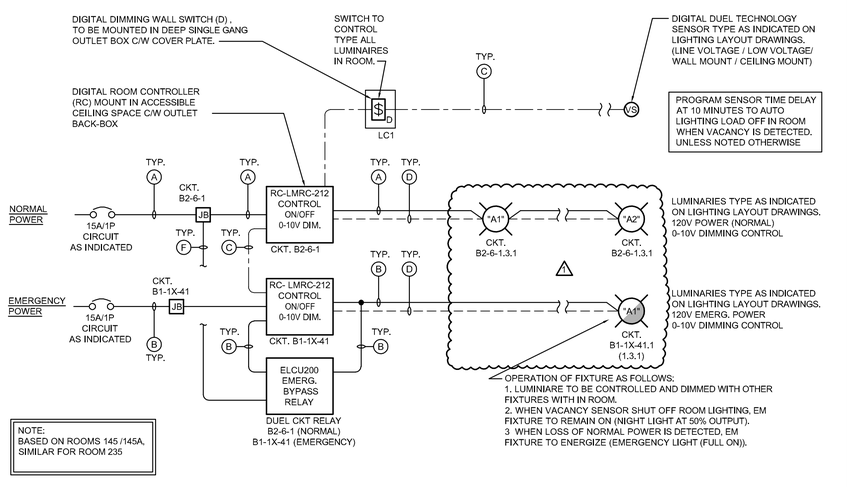

C E15 LIGHTING CONTROL SCHEMATIC "C"

SCALE = N.T.S.

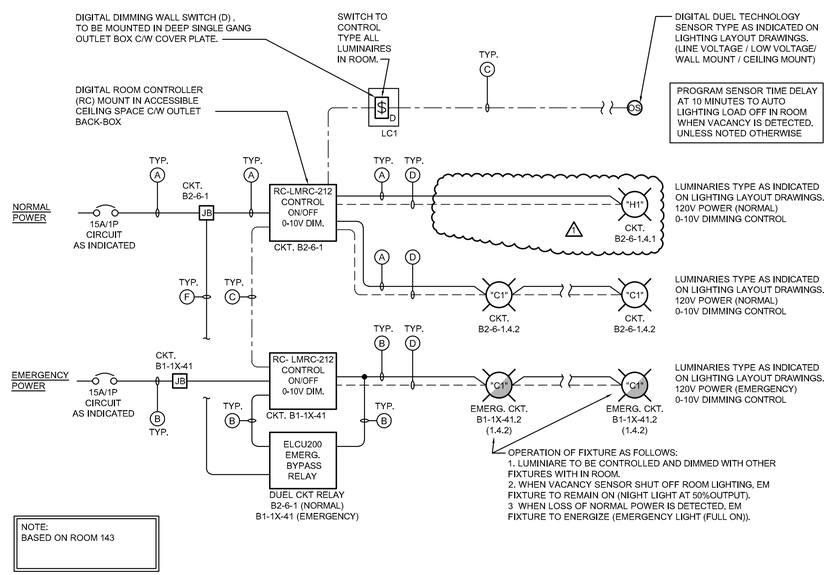

D E15 LIGHTING CONTROL SCHEMATIC "D"

SCALE = N.T.S.

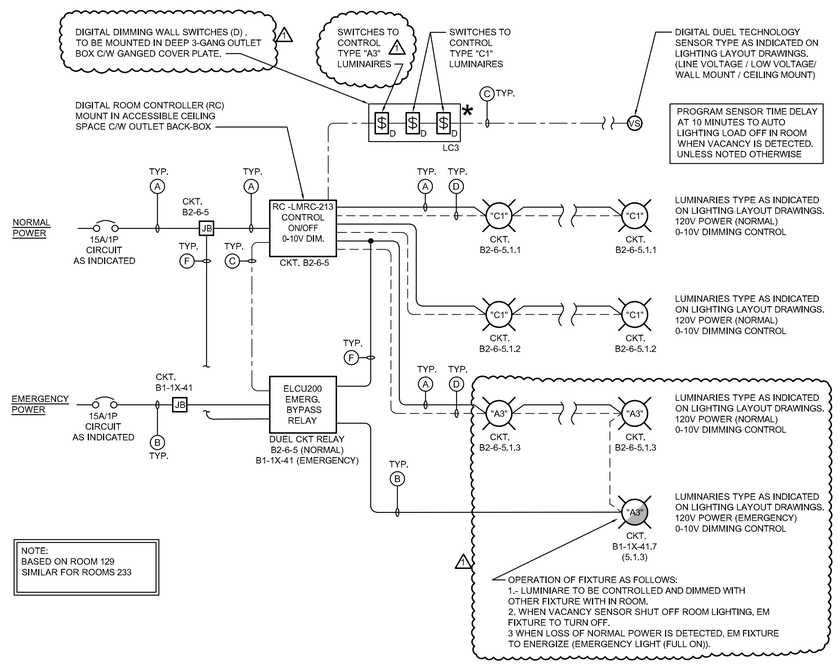

E E15 LIGHTING CONTROL SCHEMATIC "E"

SCALE = N.T.S.

LIGHTING CONTROLS MANUFACTURE AND/OR REPRESENTATIVE TO PROVIDE DETAILED WIRING DIAGRAMS BASED ON THE LIGHTING CONTROL SCHEMATIC'S PROVIDE ON THESE DRAWINGS FOR EACH TYPE / INDIVIDUAL CONTROL SYSTEM OUTLINED / SHOWN.
DETAILED DIAGRAMS TO IDENTIFYING ALL PARTS, CONTROLLERS, DEVICES, WIRING AND CONNECTION POINTS REQUIRED FOR COMPLETE AND OPERATIONAL LIGHTING CONTROL SYSTEMS.
MANUFACTURES DETAILED WIRING DIAGRAMS TO BE SUBMITTED TO ELECTRICAL CONTRACTOR AND ELECTRICAL ENGINEER FOR RECORDS, SHOP DRAWINGS, EACH DIAGRAM TO BE INCLUDED IN BUILDING OWNERS OPERATION AND MAINTENANCE MANUALS.

LIGHTING CONTROL DEVICES:

SC1 $	5-BUTTON MULTI SCENE CONTROLLER 4 SCENE BUTTONS AND DIMMER BUTTON (LOW VOLTAGE LMRJ CABLE CONNECTION) - WATTSTOPPER - MODEL # LMSW-105-W - ONE COMMON WHITE COVER PLATE
LC1 $	SINGLE (2) GANG ON / OFF / DIMMER WALL SWITCH WITH VISUAL LED BAR GRAPH INDICATING RELATIVE LIGHTING LEVEL (LOW VOLTAGE LMRJ CABLE CONNECTION) - WATTSTOPPER - MODEL # LMDM101-W, - ONE COMMON WHITE COVER PLATE
LC2 $	TWO (2) GANG ON / OFF / DIMMER WALL SWITCHES WITH VISUAL LED BAR GRAPH INDICATING RELATIVE LIGHTING LEVEL (LOW VOLTAGE LMRJ CABLE CONNECTION) - SWITCH 1: WATTSTOPPER - MODEL # LMDM-101-W - SWITCH 2: WATTSTOPPER - MODEL # LMDM-101-W - TWO (2) SWITCHES / ONE COMMON WHITE COVER PLATE
LC3 $	THREE (3) GANG ON / OFF / DIMMER WALL SWITCHES WITH VISUAL LED BAR GRAPH INDICATING RELATIVE LIGHTING LEVEL (LOW VOLTAGE LMRJ CABLE CONNECTION) - SWITCH 1: WATTSTOPPER - MODEL # LMDM-101-W - SWITCH 2: WATTSTOPPER - MODEL # LMDM-101-W - SWITCH 3: WATTSTOPPER - MODEL # LMDM-101-W - THREE (3) SWITCHES / ONE COMMON WHITE COVER PLATE
LC4 $	~~TWO (2) GANG ON / OFF / DIMMER WALL SWITCHES WITH VISUAL LED BAR GRAPH INDICATING RELATIVE LIGHTING LEVEL (LOW VOLTAGE LMRJ CABLE CONNECTION) - SWITCH 1: WATTSTOPPER - MODEL # LMDM-101-W ONE (1) SWITCHES REQUIRED FOR CONTROL OF DIMMING LUMINAIRES - SWITCH 2: WATTSTOPPER - MODEL # LMDM-101-G ONE (1) SWITCH REQUIRED FOR CONTROL OF TUNABLE WHITE (CCT) CORRELATED COLOR TEMPERATURE LEVEL WITHIN LUMINAIRES BEING CONTROLLED VIA SWITCH 1. - TWO (2) SWITCHES / ONE COMMON WHITE COVER PLATE~~
LC5 $	~~TWO (2) GANG ON / OFF / DIMMER WALL SWITCHES WITH VISUAL LED BAR GRAPH INDICATING RELATIVE LIGHTING LEVEL (LOW VOLTAGE LMRJ CABLE CONNECTION) - SWITCH 1: WATTSTOPPER - MODEL # LMDM-101-W ONE (1) SWITCHES REQUIRED FOR CONTROL OF DIMMING LUMINAIRES - SWITCH 2: WATTSTOPPER - MODEL # LMDM-101-105-G ONE (2) SWITCH REQUIRED FOR CONTROL OF TUNABLE WHITE (CCT) CORRELATED COLOR TEMPERATURE LEVEL WITHIN LUMINAIRES BEING CONTROLLED VIA SWITCH 1. - SWITCH 3: WATTSTOPPER - MODEL # LMDM-101-105-W ONE (1) SWITCHES REQUIRED FOR CONTROL OF DIMMING OTHER LUMINAIRES WITHINROOM AS INDICATED. - THREE (3) SWITCHES / ONE COMMON WHITE COVER PLATE~~
DV $	SINGLE GANG ON / OFF / DIMMER VACANCY SWITCH 120V (MANUAL ON / AUTO OFF) C/W 0-10V DIMMING - WATTSTOPPER - MODEL # DW-311-W - ONE COMMON WHITE COVER PLATE
V $	SINGLE GANG ON / OFF / VACANCY SWITCH 120V (MANUAL ON / AUTO OFF) C/W 0-10V DIMMING - WATTSTOPPER - MODEL # DW-301-W - ONE COMMON WHITE COVER PLATE
A VS	WALL MOUNT DUEL TECHNOLOGY LOW VOLTAGE VACANCY SENSOR (MANUAL ON / AUTO OFF) (LMRJ CABLE CONNECTION) WATTSTOPPER - MODEL # LMDX-100-W
B VS	WALL MOUNT DUEL TECHNOLOGY LOW VOLTAGE OCCUPANCY SENSOR (AUTO ON / AUTO OFF) (LMRJ CABLE CONNECTION) WATTSTOPPER - MODEL # LMDX-100-W
C VS	CEILING MOUNT DUEL TECHNOLOGY LOW VOLTAGEVACANCY SENSOR (MANUAL ON / AUTO OFF) (LMRJ CABLE CONNECTION) WATTSTOPPER - MODEL # LMDC-100-W
D VS	CEILING MOUNT DUEL TECHNOLOGY LOW VOLTAGEOCCUPANCY SENSOR (AUTO ON / AUTO OFF) (LMRJ CABLE CONNECTION) WATTSTOPPER - MODEL # LMDC-100-W
F VS	CEILING MOUNT DUEL TECHNOLOGY 120V OCCUPANCY SENSOR (AUTO ON / AUTO OFF) (120V WIRING WITH 0-10V CONTROL WIRING WHERE INDICATED) WATTSTOPPER - MODEL # DT-355-W / CA-1 ADAPTER (120V)

GENERAL NOTES:

A. REFER TO LIGHTING LAYOUT DRAWINGS FOR ROOM CONTROLLER RC TYPES EI "A" DENOTES LIGHTING CONTROL SCHEMATIC "A" CONTROL PACKAGE.

B. REFER TO LIGHTING LAYOUT DRAWINGS FOR QUANTITY AND TYPE OF LUMINAIRES AND CONTROL DEVICES IN EACH ROOM C/W LIGHTING CIRCUIT (CKT) NUMBERS.

C. REFER TO LIGHTING LAYOUT DRAWINGS FOR QUANTITY AND TYPE OF LUMINAIRES AND CONTROL DEVICES IN EACH ROOM C/W LIGHTING CIRCUIT (CKT) NUMBERS.

D. REFER TO LUMINAIRE SCHEDULE FOR LIGHTING FIXTURE TYPE DESCRIPTION, MANUFACTURES CAT# AND MOUNTING INFORMATION.

E. GANG ALL LIGHT SWITCHES TOGETHER WHERE POSSIBLE UNDER ONE (1) COMMON COVER PLATE.

F. ALL LUMINAIRES TO BE CHAINED. USE GALVANIZED COIL CHAIN TO SUPPORT LUMINAIRE(S) TO BUILDING STRUCTURE FROM MINIMUM TWO (2) LOCATIONS. CORNER OF EACH TO BE SUPPORTED. POINT ON CHAINS TO BE SECURED. INSTALLATION TO MEET SEISMIC REQUIREMENTS.

G. ALL LIGHTING FIXTURES NORMAL / EMERGENCY, EXIT LIGHTING TO BE CONNECTED AND SWITCHED AS INDICATED VIA A JUNCTION BOX, CONDUIT AND WIRING SYSTEM AS SPECIFIED.

H. PROVIDE ALL LIGHTING CONTROL WIRING, LINE VOLTAGE (120V), LOW VOLTAGE LIGHTING CIRCUIT, AND CONTROL WIRING VIA CEILING SPACE MOUNTED JUNCTION BOX, CONDUIT AND WIRING SYSTEM TO END DEVICE(S), SENSORS AND / OR MANUAL SWITCHES MAY BE EITHER INDIVIDUALLY WIRED OR WIRED IN TANDEM AS PER LIGHTING CONTROL SCHEDULES. REFER TO LIGHTING CONTROL SCHEDULE AND DETAIL ON DRAWINGS.

I. COORDINATE WITH LUMINAIRE MANUFACTURE AND LIGHTING CONTROLS MANUFACTURES FOR ALL WIRING / CABLE TYPES REQUIRED BETWEEN LIGHTING CONTROL DEVICES (ROOM CONTROLS , SWITCHES, SENSORS, RELAYS) AND LUMINAIRE DRIVERS TO ENSURE COMPLETE AND OPERATIONAL SYSTEMS IN EACH ROOM.

SCHEMATIC NOTES:

(A) PROVIDE 120V NORMAL POWER C/W NEW JUNCTION BOX CONDUIT AND WIRING SYSTEM. LIGHTING CIRCUIT (CKT) AS INDICATED ON LIGHTING LAYOUT DRAWINGS.

(B) PROVIDE 120V EMERGENCY POWER C/W NEW JUNCTION BOX CONDUIT AND WIRING SYSTEM. LIGHTING CIRCUIT CKT) AS INDICATED ON LIGHTING LAYOUT DRAWINGS.

(C) PROVIDE CAT5 PLENUM RATED LIGHTING SYSTEM CONTROL CABLING C/W JUNCTION BOX, CONDUIT RACEWAY SYSTEM. NOTE WITHIN SAME ROOM BETWEEN CONTROLLERS CAT5 CABLES MAY BE ROUTED WITHOUT CONDUIT RACEWAY IN ACCESSIBLE CEILING SPACES.

(D) PROVIDE NEW 0-10V DIMMING CONTROL WIRING C/W NEW JUNCTION BOX CONDUIT AND WIRING SYSTEM. FROM CONTROLLER TO LIGHTING FIXTURES AND BETWEEN LIGHTING FIXTURES AS INDICATED.

(E) ~~PROVIDE NEW 0-10V TUNABLE WHITE (CCT) CONTROL WIRING C/W NEW JUNCTION BOX CONDUIT AND WIRING SYSTEM. FROM CONTROLLER TO LIGHTING FIXTURES AND BETWEEN LIGHTING FIXTURES AS INDICATED.~~

(F) PROVIDE NORMAL POWER SENSING C/W NEW JUNCTION BOX CONDUIT AND WIRING SYSTEM. LIGHTING CIRCUIT (CKT) AS INDICATED ON LIGHTING LAYOUT DRAWINGS.

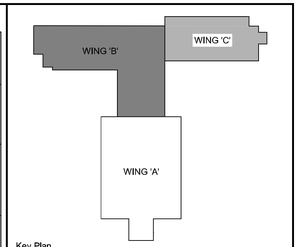

Key Plan

DO NOT SCALE DRAWINGS:

Contractors must check and verify all site conditions. Notify the Owner's Representative in writing before proceeding with the work if discrepancies are evident between the drawings and the site condition. No extras to the contract will be allowed if discrepancies were evident prior to start of work.

UNEXPECTED DISCOVERY OF ASBESTOS:

Where a friable material is discovered during construction, renovations and/or demolition, and it is suspected to contain asbestos, the Contractor must stop all work that may disturb the material. The Contractor shall advise the Owner of the discovery and await instructions from the owner.

(A/B) A = Detail number
B = Drawing number where detailed

NO.	ISSUED	BY	DATE
2	ISSUED FOR CONVENIENCE	TA	APR 12, 2019
1	POST-TENDER ADDENDUM N0.1	TA	FEB 26, 2019
0	ISSUED FOR PERMIT & TENDER	TA	NOV 2, 2018

Orientation

Seal

Seal

UNIVERSITY of GUELPH
Design, Engineering & Construction
Physical Resources
Guelph, Ontario, N1G 2W1

Consultant www.jlrichards.ca
J.L.Richards
ENGINEERS · ARCHITECTS · PLANNERS

Project
BUILDING #046
RENOVATIONS

Drawing Title
ELECTRICAL
LIGHTING CONTROL
SCHEMATICS SHEET No.1

Project No.
504034

Location
UNIVERSITY OF GUELPH
BUILDING #46

Scale N.T.S.	Date APR 12, 2019
Drawn by M.C.D.	Drawing No.
Checked By H.M.	E15
Approved By H.M.	
JLR # 27915	

Cad File No. ----

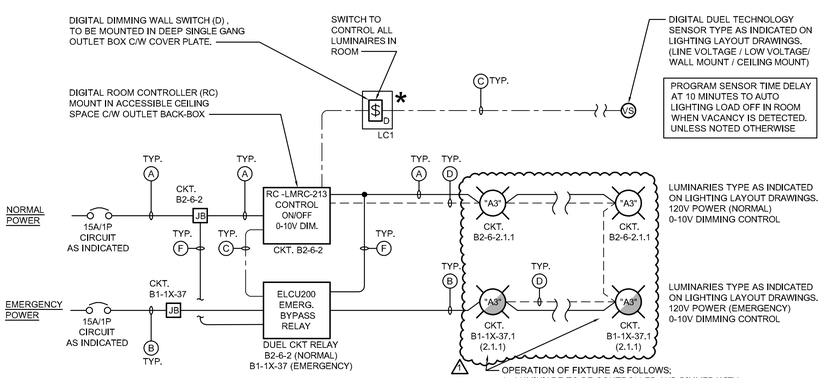

F E16 LIGHTING CONTROL SCHEMATIC "F" 1

SCALE = N.T.S.

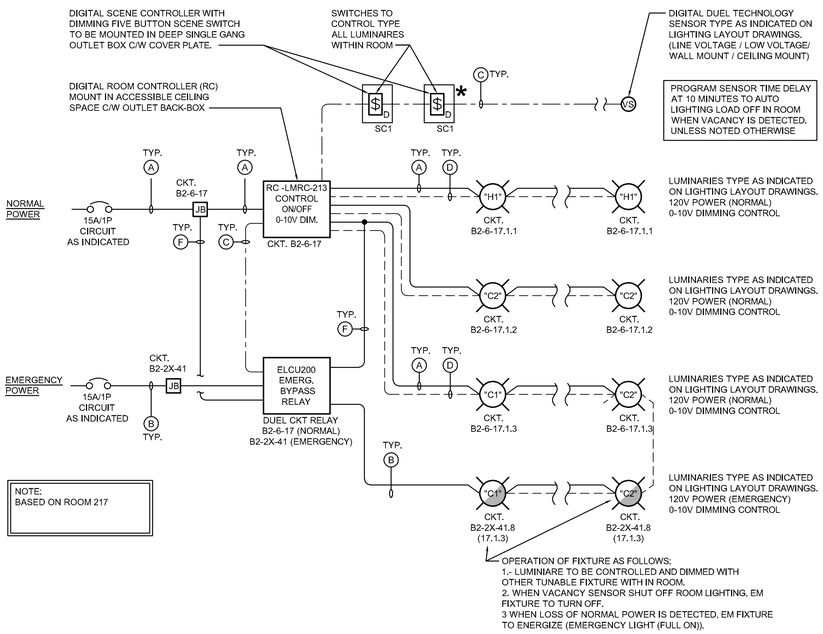

G E16 LIGHTING CONTROL SCHEMATIC "G"

SCALE = N.T.S.

LIGHTING CONTROLS MANUFACTURE AND/OR REPRESENTATIVE TO PROVIDE DETAILED WIRING DIAGRAMS BASED ON THE LIGHTING CONTROL SCHEMATIC'S PROVIDE ON THESE DRAWINGS FOR EACH TYPE / INDIVIDUAL CONTROL SYSTEM OUTLINED / SHOWN.
DETAILED DIAGRAMS TO IDENTIFYING ALL PARTS, CONTROLLERS, DEVICES, WIRING AND CONNECTION POINTS REQUIRED FOR COMPLETE AND OPERATIONAL LIGHTING CONTROL SYSTEMS.
MANUFACTURES DETAILED WIRING DIAGRAMS TO BE SUBMITTED TO ELECTRICAL CONTRACTOR AND ELECTRICAL ENGINEER FOR RECORDS, SHOP DRAWINGS, EACH DIAGRAM TO BE INCLUDED IN BUILDING OWNERS OPERATION AND MAINTENANCE MANUALS.

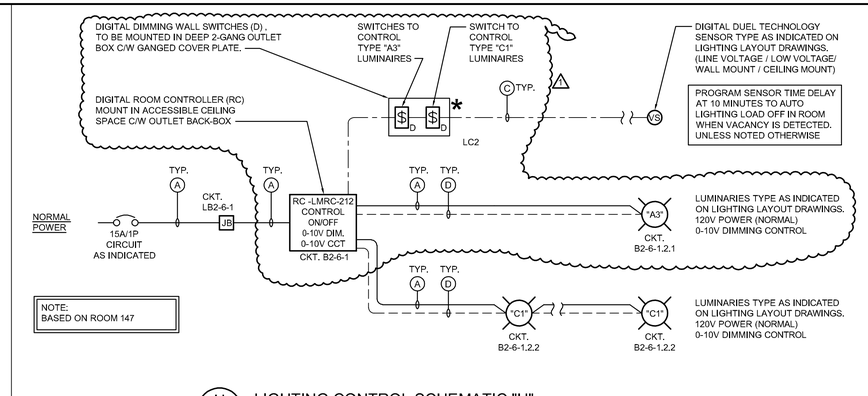

H E16 LIGHTING CONTROL SCHEMATIC "H" 1

SCALE = N.T.S.

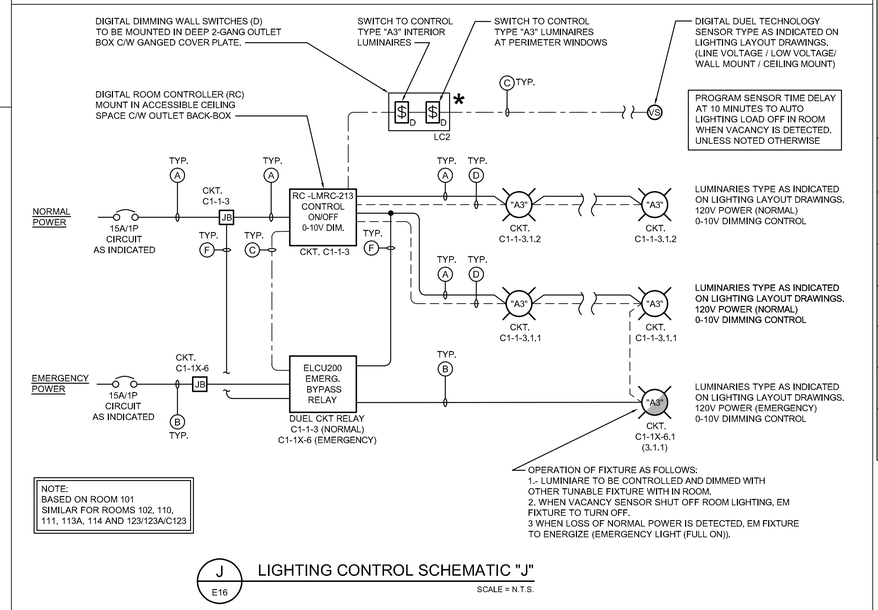

J E16 LIGHTING CONTROL SCHEMATIC "J"

SCALE = N.T.S.

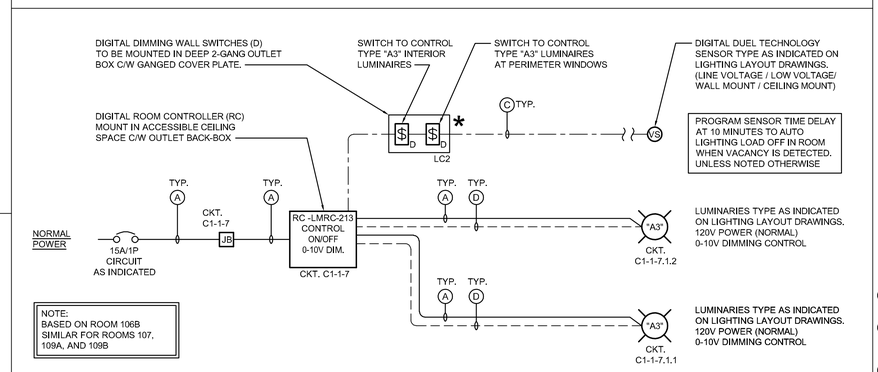

K E16 LIGHTING CONTROL SCHEMATIC "K"

SCALE = N.T.S.

LIGHTING CONTROL DEVICES:

	SC1	5-BUTTON MULTI SCENE CONTROLLER 4 SCENE BUTTONS AND DIMMER BUTTON (LOW VOLTAGE LMRJ CABLE CONNECTION) - WATTSTOPPER - MODEL # LMSW-105-W - ONE COMMON WHITE COVER PLATE
	LC1	SINGLE (2) GANG ON / OFF / DIMMER WALL SWITCH WITH VISUAL LED BAR GRAPH INDICATING RELATIVE LIGHTING LEVEL (LOW VOLTAGE LMRJ CABLE CONNECTION) - WATTSTOPPER - MODEL # LMDM101-W, - ONE COMMON WHITE COVER PLATE
	LC2	TWO (2) GANG ON / OFF / DIMMER WALL SWITCHES WITH VISUAL LED BAR GRAPH INDICATING RELATIVE LIGHTING LEVEL (LOW VOLTAGE LMRJ CABLE CONNECTION) - SWITCH 1: WATTSTOPPER - MODEL # LMDM-101-W - SWITCH 2: WATTSTOPPER - MODEL # LMDM-101-W - TWO (2) SWITCHES / ONE COMMON WHITE COVER PLATE
	LC3	THREE (3) GANG ON / OFF / DIMMER WALL SWITCHES WITH VISUAL LED BAR GRAPH INDICATING RELATIVE LIGHTING LEVEL (LOW VOLTAGE LMRJ CABLE CONNECTION) - SWITCH 1: WATTSTOPPER - MODEL # LMDM-101-W - SWITCH 2: WATTSTOPPER - MODEL # LMDM-101-W - SWITCH 3: WATTSTOPPER - MODEL # LMDM-101-W - THREE (3) SWITCHES / ONE COMMON WHITE COVER PLATE
1	LC4	~~TWO (2) GANG ON / OFF / DIMMER WALL SWITCHES WITH VISUAL LED BAR GRAPH INDICATING RELATIVE LIGHTING LEVEL (LOW VOLTAGE LMRJ CABLE CONNECTION)~~ ~~- SWITCH 1: WATTSTOPPER - MODEL # LMDM-101-W~~ ONE (1) SWITCHES REQUIRED FOR CONTROL OF DIMMING LUMINAIRES - SWITCH 2: WATTSTOPPER - MODEL # LMDM-101-G ONE (1) SWITCH REQUIRED FOR CONTROL OF TUNABLE WHITE (CCT) CORRELATED COLOR TEMPERATURE LEVEL WITHIN LUMINAIRES BEING CONTROLLED VIA SWITCH 1. - TWO (2) SWITCHES / ONE COMMON WHITE COVER PLATE
1	LC5	~~TWO (2) GANG ON / OFF / DIMMER WALL SWITCHES WITH VISUAL LED BAR GRAPH INDICATING RELATIVE LIGHTING LEVEL (LOW VOLTAGE LMRJ CABLE CONNECTION)~~ ~~- SWITCH 1: WATTSTOPPER - MODEL # LMDM-101-W~~ ONE (1) SWITCHES REQUIRED FOR CONTROL OF DIMMING LUMINAIRES - SWITCH 2: WATTSTOPPER - MODEL # LMDM-101-105-G ONE (2) SWITCH REQUIRED FOR CONTROL OF TUNABLE WHITE (CCT) CORRELATED COLOR TEMPERATURE LEVEL WITHIN LUMINAIRES BEING CONTROLLED VIA SWITCH 1. - SWITCH 3: WATTSTOPPER - MODEL # LMDM-101-105-W ONE (1) SWITCHES REQUIRED FOR CONTROL OF DIMMING OTHER LUMINAIRES WITHINROOM AS INDICATED. - THREE (3) SWITCHES / ONE COMMON WHITE COVER PLATE
	DV	SINGLE GANG ON / OFF / DIMMER VACANCY SWITCH 120V (MANUAL ON / AUTO OFF) C/W 0-10V DIMMING - WATTSTOPPER - MODEL # DW-311-W - ONE COMMON WHITE COVER PLATE
	V	SINGLE GANG ON / OFF / VACANCY SWITCH 120V (MANUAL ON / AUTO OFF) C/W 0-10V DIMMING - WATTSTOPPER - MODEL # DW-301-W - ONE COMMON WHITE COVER PLATE
	A VS	WALL MOUNT DUEL TECHNOLOGY LOW VOLTAGE VACANCY SENSOR (MANUAL ON / AUTO OFF) (LMRJ CABLE CONNECTION) WATTSTOPPER - MODEL # LMDX-100-W
	B VS	WALL MOUNT DUEL TECHNOLOGY LOW VOLTAGE OCCUPANCY SENSOR (AUTO ON / AUTO OFF) (LMRJ CABLE CONNECTION) WATTSTOPPER - MODEL # LMDX-100-W
	C VS	CEILING MOUNT DUEL TECHNOLOGY LOW VOLTAGEVACANCY SENSOR (MANUAL ON / AUTO OFF) (LMRJ CABLE CONNECTION) WATTSTOPPER - MODEL # LMDC-100-W
	D VS	CEILING MOUNT DUEL TECHNOLOGY LOW VOLTAGEOCCUPANCY SENSOR (AUTO ON / AUTO OFF) (LMRJ CABLE CONNECTION) WATTSTOPPER - MODEL # LMDC-100-W
	F VS	CEILING MOUNT DUEL TECHNOLOGY 120V OCCUPANCY SENSOR (AUTO ON / AUTO OFF) (120V WIRING WITH 0-10V CONTROL WIRING WHERE INDICATED) WATTSTOPPER - MODEL # DT-355-W / CA-1 ADAPTER (120V)

GENERAL NOTES:

A. REFER TO LIGHTING LAYOUT DRAWINGS FOR ROOM CONTROLLER RC TYPES EI "A" DENOTES LIGHTING CONTROL SCHEMATIC "A" CONTROL PACKAGE.

B. REFER TO LIGHTING LAYOUT DRAWINGS FOR QUANTITY AND TYPE OF LUMINAIRES AND CONTROL DEVICES IN EACH ROOM C/W LIGHTING CIRCUIT (CKT) NUMBERS.

C. REFER TO LIGHTING LAYOUT DRAWINGS FOR QUANTITY AND TYPE OF LUMINAIRES AND CONTROL DEVICES IN EACH ROOM C/W LIGHTING CIRCUIT (CKT) NUMBERS.

D. REFER TO LUMINAIRE SCHEDULE FOR LIGHTING FIXTURE TYPE DESCRIPTION, MANUFACTURES CAT# AND MOUNTING INFORMATION.

E. GANG ALL LIGHT SWITCHES TOGETHER WHERE POSSIBLE UNDER ONE (1) COMMON COVER PLATE.

F. ALL LUMINAIRES TO BE CHAINED. USE GALVANIZED COIL CHAIN TO SUPPORT LUMINAIRE(S) TO BUILDING STRUCTURE FROM MINIMUM TWO (2) LOCATIONS. CORNER OF EACH TO BE SUPPORTED. POINT ON CHAINS TO BE SECURED. INSTALLATION TO MEET SEISMIC REQUIREMENTS.

G. ALL LIGHTING FIXTURES NORMAL / EMERGENCY, EXIT LIGHTING TO BE CONNECTED AND SWITCHED AS INDICATED VIA A JUNCTION BOX, CONDUIT AND WIRING SYSTEM AS SPECIFIED.

H. PROVIDE ALL LIGHTING CONTROL WIRING, LINE VOLTAGE (120V), LOW VOLTAGE LIGHTING CIRCUIT, AND CONTROL WIRING VIA CEILING SPACE MOUNTED JUNCTION BOX, CONDUIT AND WIRING SYSTEM TO END DEVICE(S). SENSORS AND / OR MANUAL SWITCHES MAY BE EITHER INDIVIDUALLY WIRED OR WIRED IN TANDEM AS PER LIGHTING CONTROL SCHEDULES. REFER TO LIGHTING CONTROL SCHEDULE AND DETAIL ON DRAWINGS.

I. COORDINATE WITH LUMINAIRE MANUFACTURE AND LIGHTING CONTROLS MANUFACTURES FOR ALL WIRING / CABLE TYPES REQUIRED BETWEEN LIGHTING CONTROL DEVICES (ROOM CONTROLS , SWITCHES, SENSORS, RELAYS) AND LUMINAIRE DRIVERS TO ENSURE COMPLETE AND OPERATIONAL SYSTEMS IN EACH ROOM.

SCHEMATIC NOTES:

(A) PROVIDE 120V NORMAL POWER C/W NEW JUNCTION BOX CONDUIT AND WIRING SYSTEM. LIGHTING CIRCUIT (CKT) AS INDICATED ON LIGHTING LAYOUT DRAWINGS.

(B) PROVIDE 120V EMERGENCY POWER C/W NEW JUNCTION BOX CONDUIT AND WIRING SYSTEM. LIGHTING CIRCUIT CKT) AS INDICATED ON LIGHTING LAYOUT DRAWINGS.

(C) PROVIDE CAT5 PLENUM RATED LIGHTING SYSTEM CONTROL CABLING C/W JUNCTION BOX, CONDUIT RACEWAY SYSTEM. NOTE WITHIN SAME ROOM BETWEEN CONTROLLERS CAT5 CABLES MAY BE ROUTED WITHOUT CONDUIT RACEWAY IN ACCESSIBLE CEILING SPACES.

(D) PROVIDE NEW 0-10V DIMMING CONTROL WIRING C/W NEW JUNCTION BOX CONDUIT AND WIRING SYSTEM. FROM CONTROLLER TO LIGHTING FIXTURES AND BETWEEN LIGHTING FIXTURES AS INDICATED.

~~(E) PROVIDE NEW 0-10V TUNABLE WHITE (CCT) CONTROL WIRING C/W NEW JUNCTION BOX CONDUIT AND WIRING SYSTEM. FROM CONTROLLER TO LIGHTING FIXTURES AND BETWEEN LIGHTING FIXTURES AS INDICATED.~~ 1

(F) PROVIDE NORMAL POWER SENSING C/W NEW JUNCTION BOX CONDUIT AND WIRING SYSTEM. LIGHTING CIRCUIT (CKT) AS INDICATED ON LIGHTING LAYOUT DRAWINGS.

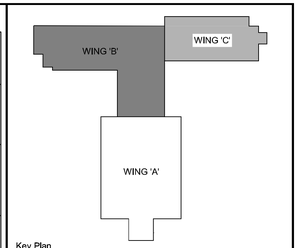

Key Plan

DO NOT SCALE DRAWINGS:

Contractors must check and verify all site conditions. Notify the Owner's Representative in writing before proceeding with the work if discrepancies are evident between the drawings and the site condition. No extras to the contract will be allowed if discrepancies were evident prior to start of work.

UNEXPECTED DISCOVERY OF ASBESTOS:

Where a friable material is discovered during construction, renovations and/or demolition, and it is suspected to contain asbestos, the Contractor must stop all work that may disturb the material. The Contractor shall advise the Owner of the discovery and await instructions from the owner.

(A/B) A = Detail number
B = Drawing number where detailed

NO.	ISSUED	BY	DATE
2	ISSUED FOR CONVENIENCE	TA	APR 12, 2019
1	POST-TENDER ADDENDUM N0.1	TA	FEB 26, 2019
0	ISSUED FOR PERMIT & TENDER	TA	NOV 2, 2018

Orientation

Seal

Seal

UNIVERSITY of GUELPH
Design, Engineering & Construction
Physical Resources
Guelph, Ontario. N1G 2W1

Consultant
www.jlrichards.ca
J.L.Richards
ENGINEERS · ARCHITECTS · PLANNERS

Project
BUILDING #046
RENOVATIONS

Drawing Title
ELECTRICAL
LIGHTING CONTROL
SCHEMATICS SHEET No.2

Project No.
504034

Location
UNIVERSITY OF GUELPH
BUILDING #46

Scale N.T.S.	Date APR 12, 2019
Drawn by M.C.D.	Drawing No.
Checked By H.M	E16
Approved By H.M.	
JLR # 27915	

Cad File No. ----

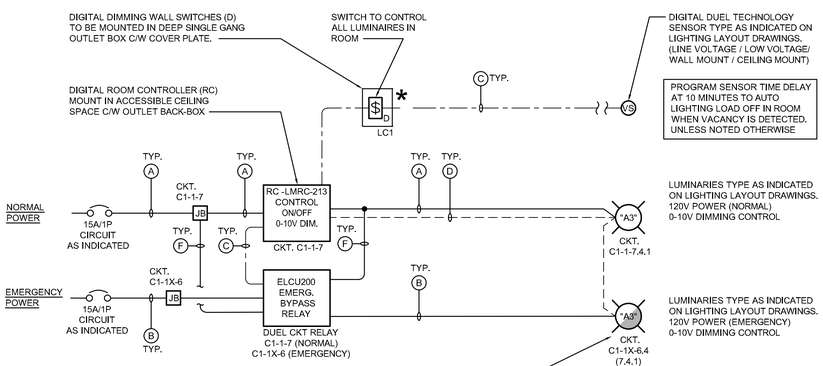

L — LIGHTING CONTROL SCHEMATIC "L"

E17

SCALE = N.T.S.

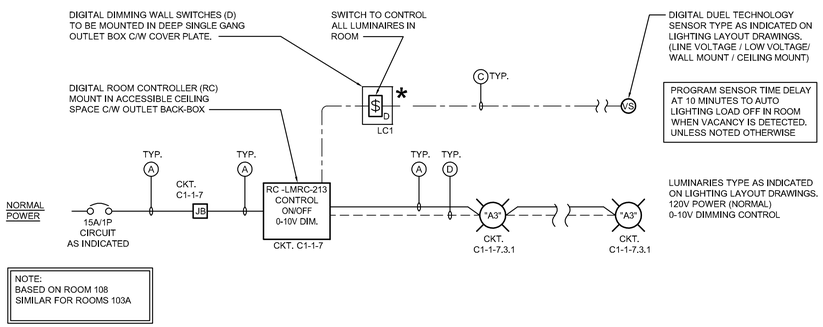

M — LIGHTING CONTROL SCHEMATIC "M"

E17

SCALE = N.T.S.

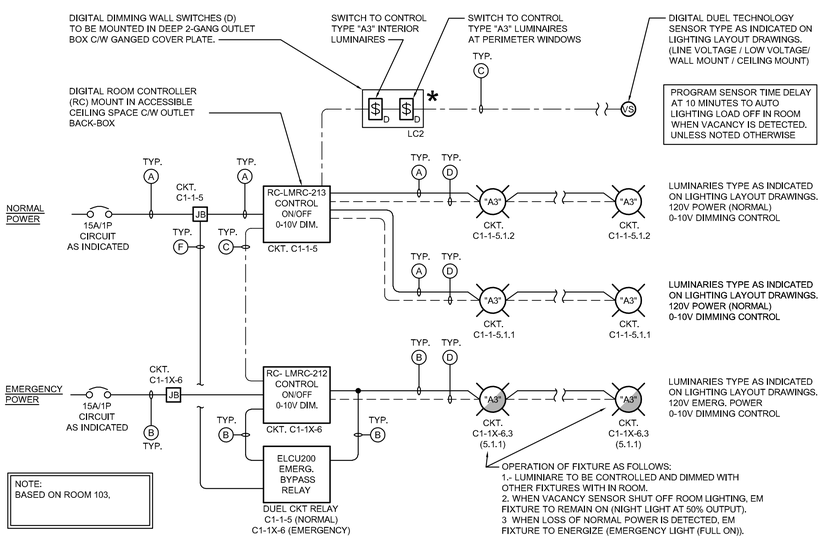

N — LIGHTING CONTROL SCHEMATIC "N"

E17

SCALE = N.T.S.

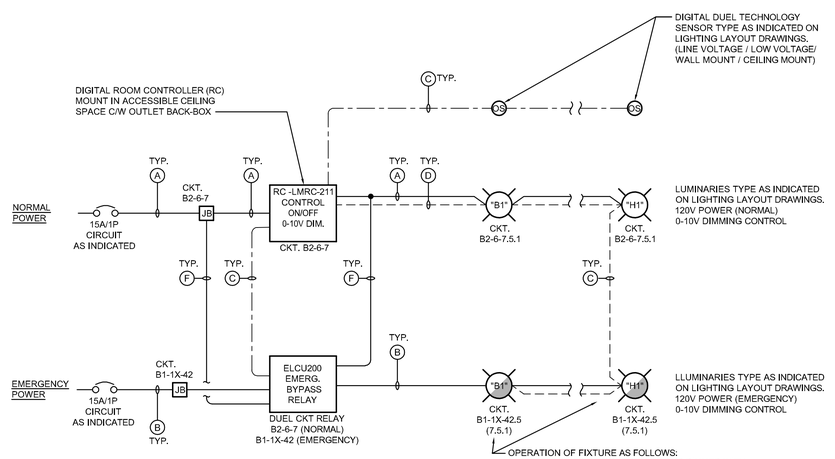

P — LIGHTING CONTROL SCHEMATIC "P"

E17

SCALE = N.T.S.

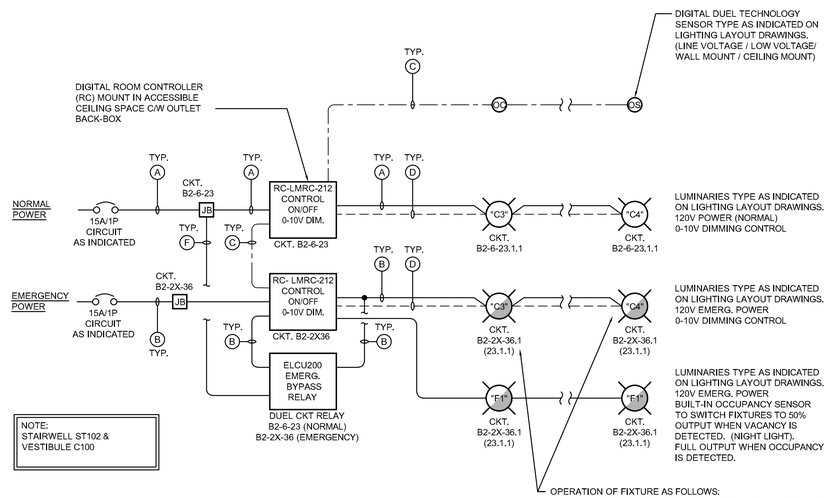

Q — LIGHTING CONTROL SCHEMATIC "Q"

E17

SCALE = N.T.S.

LIGHTING CONTROLS MANUFACTURE AND/OR REPRESENTATIVE TO PROVIDE DETAILED WIRING DIAGRAMS BASED ON THE LIGHTING CONTROL SCHEMATIC'S PROVIDE ON THESE DRAWINGS FOR EACH TYPE / INDIVIDUAL CONTROL SYSTEM OUTLINED / SHOWN.
DETAILED DIAGRAMS TO IDENTIFYING ALL PARTS, CONTROLLERS, DEVICES, WIRING AND CONNECTION POINTS REQUIRED FOR COMPLETE AND OPERATIONAL LIGHTING CONTROL SYSTEMS.
MANUFACTURES DETAILED WIRING DIAGRAMS TO BE SUBMITTED TO ELECTRICAL CONTRACTOR AND ELECTRICAL ENGINEER FOR RECORDS, SHOP DRAWINGS, EACH DIAGRAM TO BE INCLUDED IN BUILDING OWNERS OPERATION AND MAINTENANCE MANUALS.

LIGHTING CONTROL DEVICES:

SC1	$	5-BUTTON MULTI SCENE CONTROLLER 4 SCENE BUTTONS AND DIMMER BUTTON (LOW VOLTAGE LMRJ CABLE CONNECTION) - WATTSTOPPER - MODEL # LMSW-105-W - ONE COMMON WHITE COVER PLATE
LC1	$	SINGLE (2) GANG ON / OFF / DIMMER WALL SWITCH WITH VISUAL LED BAR GRAPH INDICATING RELATIVE LIGHTING LEVEL (LOW VOLTAGE LMRJ CABLE CONNECTION) - WATTSTOPPER - MODEL # LMDM101-W, - ONE COMMON WHITE COVER PLATE
LC2	$	TWO (2) GANG ON / OFF / DIMMER WALL SWITCHES WITH VISUAL LED BAR GRAPH INDICATING RELATIVE LIGHTING LEVEL (LOW VOLTAGE LMRJ CABLE CONNECTION) - SWITCH 1: WATTSTOPPER - MODEL # LMDM-101-W - SWITCH 2: WATTSTOPPER - MODEL # LMDM-101-W - TWO (2) SWITCHES / ONE COMMON WHITE COVER PLATE
LC3	$	THREE (3) GANG ON / OFF / DIMMER WALL SWITCHES WITH VISUAL LED BAR GRAPH INDICATING RELATIVE LIGHTING LEVEL (LOW VOLTAGE LMRJ CABLE CONNECTION) - SWITCH 1: WATTSTOPPER - MODEL # LMDM-101-W - SWITCH 2: WATTSTOPPER - MODEL # LMDM-101-W - SWITCH 3: WATTSTOPPER - MODEL # LMDM-101-W - THREE (3) SWITCHES / ONE COMMON WHITE COVER PLATE
~~LC4~~	~~$~~	~~TWO (2) GANG ON / OFF / DIMMER WALL SWITCHES WITH VISUAL LED BAR GRAPH INDICATING RELATIVE LIGHTING LEVEL (LOW VOLTAGE LMRJ CABLE CONNECTION) - SWITCH 1: WATTSTOPPER - MODEL # LMDM-101-W ONE (1) SWITCHES REQUIRED FOR CONTROL OF DIMMING LUMINAIRES - SWITCH 2: WATTSTOPPER - MODEL # LMDM-101-G ONE (1) SWITCH REQUIRED FOR CONTROL OF TUNABLE WHITE (CCT) CORRELATED COLOR TEMPERATURE LEVEL WITHIN LUMINAIRES BEING CONTROLLED VIA SWITCH 1. - TWO (2) SWITCHES / ONE COMMON WHITE COVER PLATE~~
~~LC5~~	~~$~~	~~TWO (2) GANG ON / OFF / DIMMER WALL SWITCHES WITH VISUAL LED BAR GRAPH INDICATING RELATIVE LIGHTING LEVEL (LOW VOLTAGE LMRJ CABLE CONNECTION) - SWITCH 1: WATTSTOPPER - MODEL # LMDM-101-W ONE (1) SWITCHES REQUIRED FOR CONTROL OF DIMMING LUMINAIRES - SWITCH 2: WATTSTOPPER - MODEL # LMDM-101-105-G ONE (2) SWITCH REQUIRED FOR CONTROL OF TUNABLE WHITE (CCT) CORRELATED COLOR TEMPERATURE LEVEL WITHIN LUMINAIRES BEING CONTROLLED VIA SWITCH 1. - SWITCH 3: WATTSTOPPER - MODEL # LMDM-101-105-W ONE (1) SWITCHES REQUIRED FOR CONTROL OF DIMMING OTHER LUMINAIRES WITHINROOM AS INDICATED. - THREE (3) SWITCHES / ONE COMMON WHITE COVER PLATE~~
DV	$	SINGLE GANG ON / OFF / DIMMER VACANCY SWITCH 120V (MANUAL ON / AUTO OFF) C/W 0-10V DIMMING - WATTSTOPPER - MODEL # DW-311-W - ONE COMMON WHITE COVER PLATE
V	$	SINGLE GANG ON / OFF / VACANCY SWITCH 120V (MANUAL ON / AUTO OFF) C/W 0-10V DIMMING - WATTSTOPPER - MODEL # DW-301-W - ONE COMMON WHITE COVER PLATE
A	VS	WALL MOUNT DUEL TECHNOLOGY LOW VOLTAGE VACANCY SENSOR (MANUAL ON / AUTO OFF) (LMRJ CABLE CONNECTION) WATTSTOPPER - MODEL # LMDX-100-W
B	OS	WALL MOUNT DUEL TECHNOLOGY LOW VOLTAGE OCCUPANCY SENSOR (AUTO ON / AUTO OFF) (LMRJ CABLE CONNECTION) WATTSTOPPER - MODEL # LMDX-100-W
C	VS	CEILING MOUNT DUEL TECHNOLOGY LOW VOLTAGEVACANCY SENSOR (MANUAL ON / AUTO OFF) (LMRJ CABLE CONNECTION) WATTSTOPPER - MODEL # LMDC-100-W
D	OS	CEILING MOUNT DUEL TECHNOLOGY LOW VOLTAGEOCCUPANCY SENSOR (AUTO ON / AUTO OFF) (LMRJ CABLE CONNECTION) WATTSTOPPER - MODEL # LMDC-100-W
F	OS	CEILING MOUNT DUEL TECHNOLOGY 120V OCCUPANCY SENSOR (AUTO ON / AUTO OFF) (120V WIRING WITH 0-10V CONTROL WIRING WHERE INDICATED) WATTSTOPPER - MODEL # DT-355-W / CA-1 ADAPTER (120V)

GENERAL NOTES:

A. REFER TO LIGHTING LAYOUT DRAWINGS FOR ROOM CONTROLLER RC TYPES EI "A" DENOTES LIGHTING CONTROL SCHEMATIC "A" CONTROL PACKAGE.

B. REFER TO LIGHTING LAYOUT DRAWINGS FOR QUANTITY AND TYPE OF LUMINAIRES AND CONTROL DEVICES IN EACH ROOM C/W LIGHTING CIRCUIT (CKT) NUMBERS.

C. REFER TO LIGHTING LAYOUT DRAWINGS FOR QUANTITY AND TYPE OF LUMINAIRES AND CONTROL DEVICES IN EACH ROOM C/W LIGHTING CIRCUIT (CKT) NUMBERS.

D. REFER TO LUMINAIRE SCHEDULE FOR LIGHTING FIXTURE TYPE DESCRIPTION, MANUFACTURES CAT# AND MOUNTING INFORMATION.

E. GANG ALL LIGHT SWITCHES TOGETHER WHERE POSSIBLE UNDER ONE (1) COMMON COVER PLATE.

F. ALL LUMINAIRES TO BE CHAINED. USE GALVANIZED COIL CHAIN TO SUPPORT LUMINAIRE(S) TO BUILDING STRUCTURE FROM MINIMUM TWO (2) LOCATIONS. CORNER OF EACH TO BE SUPPORTED. POINT ON CHAINS TO BE SECURED. INSTALLATION TO MEET SEISMIC REQUIREMENTS.

G. ALL LIGHTING FIXTURES NORMAL / EMERGENCY, EXIT LIGHTING TO BE CONNECTED AND SWITCHED AS INDICATED VIA A JUNCTION BOX, CONDUIT AND WIRING SYSTEM AS SPECIFIED.

H. PROVIDE ALL LIGHTING CONTROL WIRING, LINE VOLTAGE (120V), LOW VOLTAGE LIGHTING CIRCUIT, AND CONTROL WIRING VIA CEILING SPACE MOUNTED JUNCTION BOX, CONDUIT AND WIRING SYSTEM TO END DEVICE(S). SENSORS AND / OR MANUAL SWITCHES MAY BE EITHER INDIVIDUALLY WIRED OR WIRED IN TANDEM AS PER LIGHTING CONTROL SCHEDULES. REFER TO LIGHTING CONTROL SCHEDULE AND DETAIL ON DRAWINGS.

I. COORDINATE WITH LUMINAIRE MANUFACTURE AND LIGHTING CONTROLS MANUFACTURES FOR ALL WIRING / CABLE TYPES REQUIRED BETWEEN LIGHTING CONTROL DEVICES (ROOM CONTROLS , SWITCHES, SENSORS, RELAYS) AND LUMINAIRE DRIVERS TO ENSURE COMPLETE AND OPERATIONAL SYSTEMS IN EACH ROOM.

SCHEMATIC NOTES:

(A) PROVIDE 120V NORMAL POWER C/W NEW JUNCTION BOX CONDUIT AND WIRING SYSTEM. LIGHTING CIRCUIT (CKT) AS INDICATED ON LIGHTING LAYOUT DRAWINGS.

(B) PROVIDE 120V EMERGENCY POWER C/W NEW JUNCTION BOX CONDUIT AND WIRING SYSTEM. LIGHTING CIRCUIT CKT) AS INDICATED ON LIGHTING LAYOUT DRAWINGS.

(C) PROVIDE CAT5 PLENUM RATED LIGHTING SYSTEM CONTROL CABLING C/W JUNCTION BOX, CONDUIT RACEWAY SYSTEM. NOTE WITHIN SAME ROOM BETWEEN CONTROLLERS CAT5 CABLES MAY BE ROUTED WITHOUT CONDUIT RACEWAY IN ACCESSIBLE CEILING SPACES.

(D) PROVIDE NEW 0-10V DIMMING CONTROL WIRING C/W NEW JUNCTION BOX CONDUIT AND WIRING SYSTEM. FROM CONTROLLER TO LIGHTING FIXTURES AND BETWEEN LIGHTING FIXTURES AS INDICATED.

~~(E) PROVIDE NEW 0-10V TUNABLE WHITE (CCT) CONTROL WIRING C/W NEW JUNCTION BOX CONDUIT AND WIRING SYSTEM. FROM CONTROLLER TO LIGHTING FIXTURES AND BETWEEN LIGHTING FIXTURES AS INDICATED.~~ 1

(F) PROVIDE NORMAL POWER SENSING C/W NEW JUNCTION BOX CONDUIT AND WIRING SYSTEM. LIGHTING CIRCUIT (CKT) AS INDICATED ON LIGHTING LAYOUT DRAWINGS.

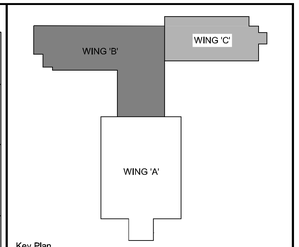

Key Plan

DO NOT SCALE DRAWINGS:

Contractors must check and verify all site conditions. Notify the Owner's Representative in writing before proceeding with the work if discrepancies are evident between the drawings and the site condition. No extras to the contract will be allowed if discrepancies were evident prior to start of work.

UNEXPECTED DISCOVERY OF ASBESTOS:

Where a friable material is discovered during construction, renovations and/or demolition, and it is suspected to contain asbestos, the Contractor must stop all work that may disturb the material. The Contractor shall advise the Owner of the discovery and await instructions from the owner.

(A/B) A = Detail number
B = Drawing number where detailed

NO.	ISSUED	BY	DATE
2	ISSUED FOR CONVENIENCE	TA	APR 12, 2019
1	POST-TENDER ADDENDUM N0.1	TA	FEB 26, 2019
0	ISSUED FOR PERMIT & TENDER	TA	NOV 2, 2018

Orientation

Seal

Seal

UNIVERSITY of GUELPH
Design, Engineering & Construction
Physical Resources
Guelph, Ontario. N1G 2W1

Consultant
www.jlrichards.ca
J.L.Richards
ENGINEERS · ARCHITECTS · PLANNERS

Project
BUILDING #046
RENOVATIONS

Drawing Title
ELECTRICAL
LIGHTING CONTROL
SCHEMATICS SHEET No.3

Project No.
504034

Location
UNIVERSITY OF GUELPH
BUILDING #46

Scale: N.T.S.	Date: APR 12, 2019
Drawn by: M.C.D.	Drawing No.
Checked By: H.M.	E17
Approved By: H.M.	
JLR #: 27915	

Cad File No. ----

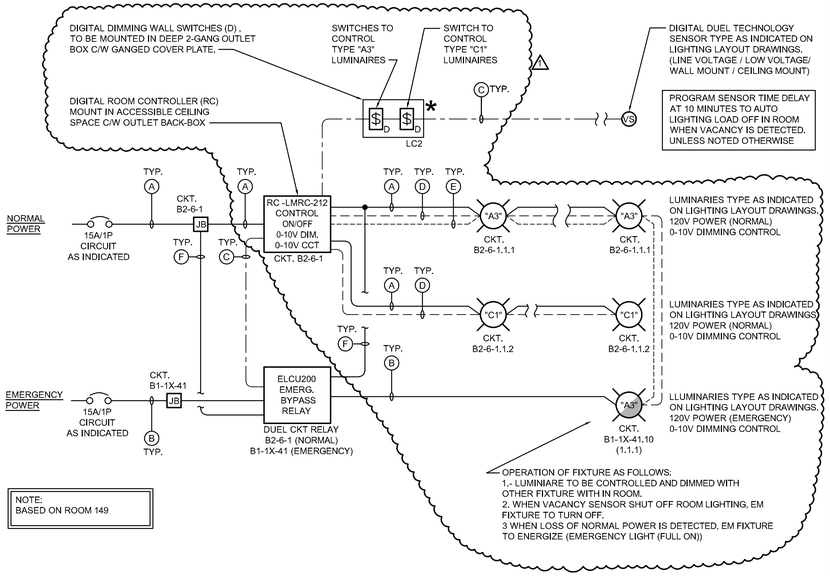

R E18 LIGHTING CONTROL SCHEMATIC "R"

SCALE = N.T.S.

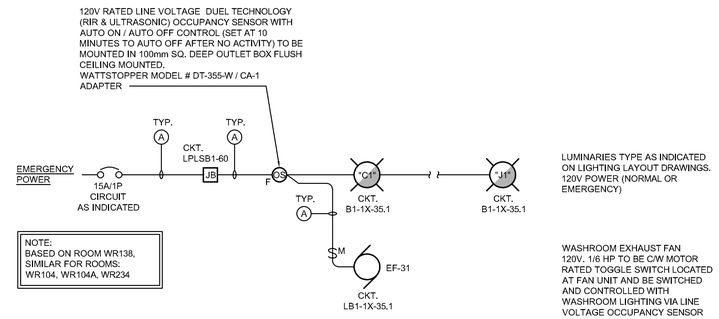

W E18 LIGHTING CONTROL SCHEMATIC "W"

SCALE = N.T.S.

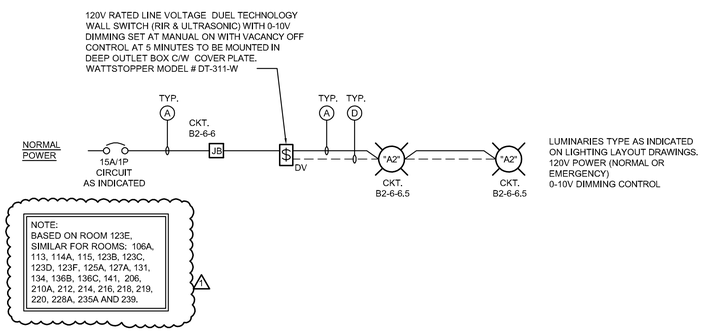

X E18 LIGHTING CONTROL SCHEMATIC "X"

SCALE = N.T.S.

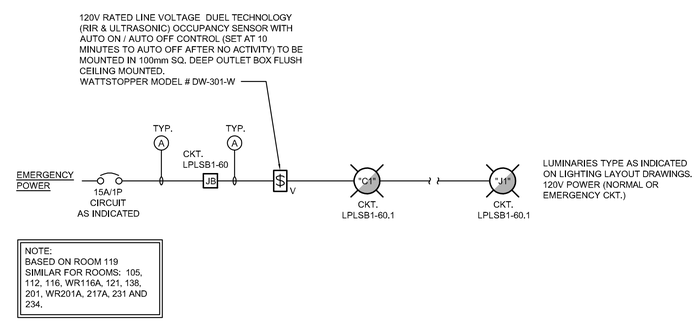

Y E18 LIGHTING CONTROL SCHEMATIC "Y"

SCALE = N.T.S.

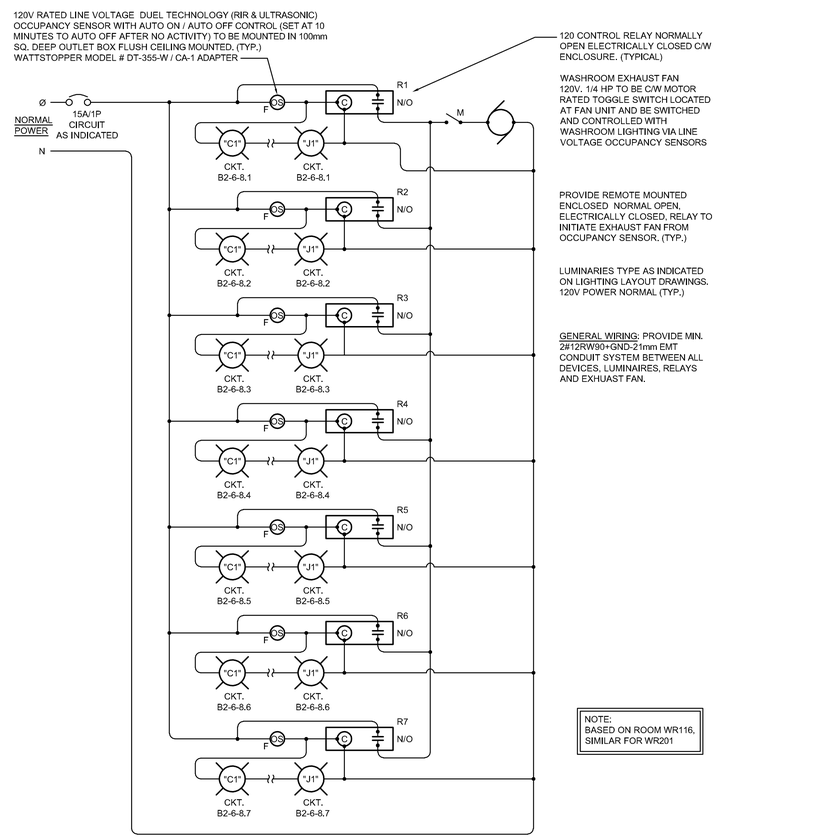

V E18 LIGHTING CONTROL SCHEMATIC "V"

SCALE = N.T.S.

LIGHTING CONTROLS MANUFACTURE AND/OR REPRESENTATIVE TO PROVIDE DETAILED WIRING DIAGRAMS BASED ON THE LIGHTING CONTROL SCHEMATIC'S PROVIDE ON THESE DRAWINGS FOR EACH TYPE / INDIVIDUAL CONTROL SYSTEM OUTLINED / SHOWN.
DETAILED DIAGRAMS TO IDENTIFYING ALL PARTS, CONTROLLERS, DEVICES, WIRING AND CONNECTION POINTS REQUIRED FOR COMPLETE AND OPERATIONAL LIGHTING CONTROL SYSTEMS.
MANUFACTURES DETAILED WIRING DIAGRAMS TO BE SUBMITTED TO ELECTRICAL CONTRACTOR AND ELECTRICAL ENGINEER FOR RECORDS, SHOP DRAWINGS, EACH DIAGRAM TO BE INCLUDED IN BUILDING OWNERS OPERATION AND MAINTENANCE MANUALS.

LIGHTING CONTROL DEVICES:

SC1 $	5-BUTTON MULTI SCENE CONTROLLER 4 SCENE BUTTONS AND DIMMER BUTTON (LOW VOLTAGE LMRJ CABLE CONNECTION) - WATTSTOPPER - MODEL # LMSW-105-W - ONE COMMON WHITE COVER PLATE
LC1 $	SINGLE (2) GANG ON / OFF / DIMMER WALL SWITCH WITH VISUAL LED BAR GRAPH INDICATING RELATIVE LIGHTING LEVEL (LOW VOLTAGE LMRJ CABLE CONNECTION) - WATTSTOPPER - MODEL # LMDM101-W, - ONE COMMON WHITE COVER PLATE
LC2 $	TWO (2) GANG ON / OFF / DIMMER WALL SWITCHES WITH VISUAL LED BAR GRAPH INDICATING RELATIVE LIGHTING LEVEL (LOW VOLTAGE LMRJ CABLE CONNECTION) - SWITCH 1: WATTSTOPPER - MODEL # LMDM-101-W - SWITCH 2: WATTSTOPPER - MODEL # LMDM-101-W - TWO (2) SWITCHES / ONE COMMON WHITE COVER PLATE
LC3 $	THREE (3) GANG ON / OFF / DIMMER WALL SWITCHES WITH VISUAL LED BAR GRAPH INDICATING RELATIVE LIGHTING LEVEL (LOW VOLTAGE LMRJ CABLE CONNECTION) - SWITCH 1: WATTSTOPPER - MODEL # LMDM-101-W - SWITCH 2: WATTSTOPPER - MODEL # LMDM-101-W - SWITCH 3: WATTSTOPPER - MODEL # LMDM-101-W - THREE (3) SWITCHES / ONE COMMON WHITE COVER PLATE
~~LC4 $~~	~~TWO (2) GANG ON / OFF / DIMMER WALL SWITCHES WITH VISUAL LED BAR GRAPH INDICATING RELATIVE LIGHTING LEVEL (LOW VOLTAGE LMRJ CABLE CONNECTION)~~ ~~- SWITCH 1: WATTSTOPPER - MODEL # LMDM-101-W~~ ~~ONE (1) SWITCHES REQUIRED FOR CONTROL OF DIMMING LUMINAIRES~~ ~~- SWITCH 2: WATTSTOPPER - MODEL # LMDM-101-G~~ ~~ONE (1) SWITCH REQUIRED FOR CONTROL OF TUNABLE WHITE (CCT) CORRELATED COLOR TEMPERATURE LEVEL WITHIN LUMINAIRES BEING CONTROLLED VIA SWITCH 1.~~ ~~- TWO (2) SWITCHES / ONE COMMON WHITE COVER PLATE~~
~~LC5 $~~	~~TWO (2) GANG ON / OFF / DIMMER WALL SWITCHES WITH VISUAL LED BAR GRAPH INDICATING RELATIVE LIGHTING LEVEL (LOW VOLTAGE LMRJ CABLE CONNECTION)~~ ~~- SWITCH 1: WATTSTOPPER - MODEL # LMDM-101-W~~ ~~ONE (1) SWITCHES REQUIRED FOR CONTROL OF DIMMING LUMINAIRES.~~ ~~- SWITCH 2: WATTSTOPPER - MODEL # LMDM-101-105-G~~ ~~ONE (2) SWITCH REQUIRED FOR CONTROL OF TUNABLE WHITE (CCT) CORRELATED COLOR TEMPERATURE LEVEL WITHIN LUMINAIRES BEING CONTROLLED VIA SWITCH 1.~~ ~~SWITCH 3: WATTSTOPPER - MODEL # LMDM-101-105-W~~ ~~ONE (1) SWITCHES REQUIRED FOR CONTROL OF DIMMING OTHER LUMINAIRES WITHINROOM AS INDICATED.~~ ~~- THREE (3) SWITCHES / ONE COMMON WHITE COVER PLATE~~
DV $	SINGLE GANG ON / OFF / DIMMER VACANCY SWITCH 120V (MANUAL ON / AUTO OFF) C/W 0-10V DIMMING - WATTSTOPPER - MODEL # DW-311-W - ONE COMMON WHITE COVER PLATE
V $	SINGLE GANG ON / OFF / VACANCY SWITCH 120V (MANUAL ON / AUTO OFF) C/W 0-10V DIMMING - WATTSTOPPER - MODEL # DW-301-W - ONE COMMON WHITE COVER PLATE
A VS	WALL MOUNT DUEL TECHNOLOGY LOW VOLTAGE VACANCY SENSOR (MANUAL ON / AUTO OFF) (LMRJ CABLE CONNECTION) WATTSTOPPER - MODEL # LMDX-100-W
B OS	WALL MOUNT DUEL TECHNOLOGY LOW VOLTAGE OCCUPANCY SENSOR (AUTO ON / AUTO OFF) (LMRJ CABLE CONNECTION) WATTSTOPPER - MODEL # LMDX-100-W
C VS	CEILING MOUNT DUEL TECHNOLOGY LOW VOLTAGEVACANCY SENSOR (MANUAL ON / AUTO OFF) (LMRJ CABLE CONNECTION) WATTSTOPPER - MODEL # LMDC-100-W
D OS	CEILING MOUNT DUEL TECHNOLOGY LOW VOLTAGEOCCUPANCY SENSOR (AUTO ON / AUTO OFF) (LMRJ CABLE CONNECTION) WATTSTOPPER - MODEL # LMDC-100-W
F OS	CEILING MOUNT DUEL TECHNOLOGY 120V OCCUPANCY SENSOR (AUTO ON / AUTO OFF) (120V WIRING WITH 0-10V CONTROL WIRING WHERE INDICATED) WATTSTOPPER - MODEL # DT-355-W / CA-1 ADAPTER (120V)

GENERAL NOTES:

A. REFER TO LIGHTING LAYOUT DRAWINGS FOR ROOM CONTROLLER RC TYPES EI "A" DENOTES LIGHTING CONTROL SCHEMATIC "A" CONTROL PACKAGE.

B. REFER TO LIGHTING LAYOUT DRAWINGS FOR QUANTITY AND TYPE OF LUMINAIRES AND CONTROL DEVICES IN EACH ROOM C/W LIGHTING CIRCUIT (CKT) NUMBERS.

C. REFER TO LIGHTING LAYOUT DRAWINGS FOR QUANTITY AND TYPE OF LUMINAIRES AND CONTROL DEVICES IN EACH ROOM C/W LIGHTING CIRCUIT (CKT) NUMBERS.

D. REFER TO LUMINAIRE SCHEDULE FOR LIGHTING FIXTURE TYPE DESCRIPTION, MANUFACTURES CAT# AND MOUNTING INFORMATION.

E. GANG ALL LIGHT SWITCHES TOGETHER WHERE POSSIBLE UNDER ONE (1) COMMON COVER PLATE.

F. ALL LUMINAIRES TO BE CHAINED. USE GALVANIZED COIL CHAIN TO SUPPORT LUMINAIRE(S) TO BUILDING STRUCTURE FROM MINIMUM TWO (2) LOCATIONS. CORNER OF EACH TO BE SUPPORTED. POINT ON CHAINS TO BE SECURED. INSTALLATION TO MEET SEISMIC REQUIREMENTS.

G. ALL LIGHTING FIXTURES NORMAL / EMERGENCY, EXIT LIGHTING TO BE CONNECTED AND SWITCHED AS INDICATED VIA A JUNCTION BOX, CONDUIT AND WIRING SYSTEM AS SPECIFIED.

H. PROVIDE ALL LIGHTING CONTROL WIRING, LINE VOLTAGE (120V), LOW VOLTAGE LIGHTING CIRCUIT, AND CONTROL WIRING VIA CEILING SPACE MOUNTED JUNCTION BOX, CONDUIT AND WIRING SYSTEM TO END DEVICE(S), SENSORS AND / OR MANUAL SWITCHES MAY BE EITHER INDIVIDUALLY WIRED OR WIRED IN TANDEM AS PER LIGHTING CONTROL SCHEDULES. REFER TO LIGHTING CONTROL SCHEDULE AND DETAIL ON DRAWINGS.

I. COORDINATE WITH LUMINAIRE MANUFACTURE AND LIGHTING CONTROLS MANUFACTURES FOR ALL WIRING / CABLE TYPES REQUIRED BETWEEN LIGHTING CONTROL DEVICES (ROOM CONTROLS , SWITCHES, SENSORS, RELAYS) AND LUMINAIRE DRIVERS TO ENSURE COMPLETE AND OPERATIONAL SYSTEMS IN EACH ROOM.

SCHEMATIC NOTES:

(A) PROVIDE 120V NORMAL POWER C/W NEW JUNCTION BOX CONDUIT AND WIRING SYSTEM. LIGHTING CIRCUIT (CKT) AS INDICATED ON LIGHTING LAYOUT DRAWINGS.

(B) PROVIDE 120V EMERGENCY POWER C/W NEW JUNCTION BOX CONDUIT AND WIRING SYSTEM. LIGHTING CIRCUIT CKT) AS INDICATED ON LIGHTING LAYOUT DRAWINGS.

(C) PROVIDE CAT5 PLENUM RATED LIGHTING SYSTEM CONTROL CABLING C/W JUNCTION BOX, CONDUIT RACEWAY SYSTEM. NOTE WITHIN SAME ROOM BETWEEN CONTROLLERS CAT5 CABLES MAY BE ROUTED WITHOUT CONDUIT RACEWAY IN ACCESSIBLE CEILING SPACES.

(D) PROVIDE NEW 0-10V DIMMING CONTROL WIRING C/W NEW JUNCTION BOX CONDUIT AND WIRING SYSTEM. FROM CONTROLLER TO LIGHTING FIXTURES AND BETWEEN LIGHTING FIXTURES AS INDICATED.

~~(E) PROVIDE NEW 0-10V TUNABLE WHITE (CCT) CONTROL WIRING C/W NEW JUNCTION BOX CONDUIT AND WIRING SYSTEM. FROM CONTROLLER TO LIGHTING FIXTURES AND BETWEEN LIGHTING FIXTURES AS INDICATED.~~

(F) PROVIDE NORMAL POWER SENSING C/W NEW JUNCTION BOX CONDUIT AND WIRING SYSTEM. LIGHTING CIRCUIT (CKT) AS INDICATED ON LIGHTING LAYOUT DRAWINGS.

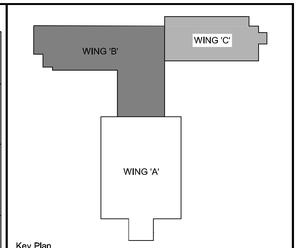

Key Plan

DO NOT SCALE DRAWINGS:

Contractors must check and verify all site conditions. Notify the Owner's Representative in writing before proceeding with the work if discrepancies are evident between the drawings and the site condition. No extras to the contract will be allowed if discrepancies were evident prior to start of work.

UNEXPECTED DISCOVERY OF ASBESTOS:

Where a friable material is discovered during construction, renovations and/or demolition, and it is suspected to contain asbestos, the Contractor must stop all work that may disturb the material. The Contractor shall advise the Owner of the discovery and await instructions from the owner.

(A/B) A = Detail number
B = Drawing number where detailed

NO.	ISSUED	BY	DATE
2	ISSUED FOR CONVENIENCE	TA	APR 12, 2019
1	POST-TENDER ADDENDUM N0.1	TA	FEB 26, 2019
0	ISSUED FOR PERMIT & TENDER	TA	NOV 2, 2018

Orientation

Seal

Seal

UNIVERSITY of GUELPH
Design, Engineering & Construction
Physical Resources
Guelph, Ontario. N1G 2W1

Consultant www.jlrichards.ca
J.L.Richards
ENGINEERS · ARCHITECTS · PLANNERS

Project
BUILDING #046
RENOVATIONS

Drawing Title
ELECTRICAL
LIGHTING CONTROL
SCHEMATICS SHEET No.4

Project No.
504034

Location
UNIVERSITY OF GUELPH
BUILDING #46

Scale N.T.S.	Date APR 12, 2019
Drawn by M.C.D.	Drawing No.
Checked By H.M	E18
Approved By H.M.	
JLR # 27915	

Cad File No. ----

GENERAL NOTES

A. CAREFULLY COORDINATE ALL ELECTRICAL WORK WITH ALL OTHER TRADES ON SITE TO ENSURE NO CONFLICTS OR INTERFERENCES OCCUR.

B. PROVIDE ALL FASTENERS, FITTINGS, JUNCTION, OUTLET, BACKBOXES, CONDUIT, WIRING AND HARDWARE REQUIRED TO ENSURE A COMPLETE AND OPERATIONAL SYSTEM. REFER TO SPECIFICATIONS.

C. WHERE CONDUIT SYSTEMS CROSS BUILDING EXPANSION JOINTS PROVIDE JUNCTION BOXES ON EITHER SIDE OF JOINT C/W METAL FLEX CONDUIT & WIRING SYSTEM TO BRIDGE JOINT AND ALLOW FOR BUILDING MOVEMENT. REFER TO DETAILS ON DRAWINGS AND / OR SPECIFICATIONS.

D. ALL JUNCTION BOX CONDUIT AND WIRING SYSTEMS ARE TO BE CONCEALED IN PARTITIONS WALL FLOOR SLABS AND CEILING SPACES UNLESS NOTED OTHERWISE.

E. PROVIDE CHANNEL SUPPORT HANGERS, MIN. 19mm THREADED ROD TRAPEZE HANGER ASSEMBLIES FOR MOUNTING ALL JUNCTION BOX CONDUIT, RACEWAY SYSTEMS. SUPPORT SYSTEM HANGERS TO BE SPACED AT NOT MORE THAT 2400mm APART UNLESS NOTED OTHERWISE, REFER TO SPECIFICATIONS.

F. ALL ELECTRICAL RACEWAY / SUPPORT SYSTEMS TO BE SECURED TO MEET SEISMIC REQUIREMENTS.

G. COORDINATE EXACT LOCATION OF OUTLETS/DEVICES WITH ARCHITECTURAL DRAWINGS, MILLWORK DETAILS FANCOM DRAWINGS, AND BUILDING OWNER'S A/V CONSULTANT DRAWINGS, AND EQUIPMENT REQUIREMENTS.

H. MOUNTING HEIGHT OF OUTLETS, DEVICES, SWITCHES, CONTROLS IS FROM FINISHED FLOOR TO CENTER-LINE OF EQUIPMENT UNLESS NOTED OTHERWISE. REFER TO ELECTRICAL SPECIFICATION.

I. COORDINATE ON SITE: DRILL / CUT OPENINGS IN EXISTING PARTITION WALLS, FLOOR SLAB TO FACILITATE INSTALLATION OF ELECTRICAL SYSTEMS. PATCH, REPAIR AND REPAINT ALL OPENINGS TO MATCH EXISTING AND/OR NEW FINISH REQUIREMENTS.

J. SEAL ALL THROUGH WALL, FLOOR SLAB PENETRATIONS WITH APPROVED FIRE STOP SEALANT.

K. PROVIDE LAMACOID NAMEPLATE AND P-TOUCH CIRCUIT IDENTIFICATION ON EQUIPMENT, COVER PLATES, JUNCTION BOXES. REFER TO SPECIFICATION FOR ADDITIONAL INFORMATION.

L. THE WORD "PROVIDE" USED ON THESE DRAWINGS, MEAN THE CONTRACTOR IS RESPONSIBLE TO SUPPLY, INSTALL, WIRE, CONNECT, CONTROL SETUP, TEST, AND COMMISSION EQUIPMENT, DEVICES, AND/OR LUMINAIRES.

M. ALL ELECTRICAL EQUIPMENT, DEVICE OUTLET BOXES TO BE INSTALLED IN SEPARATE STUD SPACES (SEPARATED BY A STUD) AND PREFERABLY ISOLATED BY MIN. 600mm APART WHERE POSSIBLE FOR WALL ERATED STC 45 OR HIGHER. REFER TO DETAIL 3/E20 ON DRAWINGS.

N. EXPOSED ELECTRICAL BOXES IN WALLS RATED STC 50 AND HIGHER TO BE SEALED

O. CONTRACTOR SHALL COORDINATE AND PROVIDE CUT / CHASE IN EXISTING WALL WHERE REQUIRED TO RECESS CONDUIT INSTALLATION FOR DEVICES INDICATED.

DRAWING NOTES

1. ELECTRICAL EQUIPMENT INDICATED AS OFFSET FROM WALL IS EXISTING OR TO BE INSTALLED ABOVE/BELOW OTHER EQUIPMENT SHOWN ON WALL. CONTRACTOR TO COORDINATE EXACT INSTALLATION CONFIGURATION ON SITE.
2. INSTALL NEW PANEL BOARD RECESSED MOUNTED, IN WALL WHERE LOCATION / CUT OUT OF PREVIOUSLY DEMOLISHED PANEL EXISTS. MODIFY, PATCH AND REPAIR EXISTING WALL CUT OUT AS NECESSARY TO ACCOMMODATE NEW PANEL DIMENSIONS, FEEDER, BRANCH CIRCUIT CONDUIT AND WIRING. REFER TO ARCHITECTURAL DRAWINGS FOR ADDITIONAL INFORMATION.
3. INSTALL NEW PANEL BOARD SURFACE MOUNTED TO WALL, IN SAME LOCATION AS PREVIOUSLY DEMOLISHED PANEL.
4. INSTALL NEW PANEL BOARD RECESSED MOUNTED, IN WALL.
5. PROVIDE NEW RECESSED MOUNTED 15A, 125V DUPLEX RECEPTACLE C/W OUTLET BOX, COVER PLATE CONDUIT AND WIRING. CCT AS INDICATED. (TYPICAL)
6. PROVIDE NEW RECESSED MOUNTED 15A, 125V DOUBLE DUPLEX RECEPTACLE C/W OUTLET BOX, COVER PLATE CONDUIT AND WIRING. CCT AS INDICATED. (TYPICAL)
7. PROVIDE NEW RECESSED MOUNTED 15A, 125V RECEPTACLE AS INDICATED C/W CUSTOM OUTLET BOX, COVER PLATE CONDUIT AND WIRING FOR WALL MOUNTED TELEVISION. SIMILAR TO LEVITON 690. CCT AS INDICATED. REFER TO PLAN FOR MOUNTING HEIGHT, COORDINATE EXACT LOCATION WITH ARCHITECTURAL AND FANCOM DRAWINGS. AND WALL MOUNTED BRACKET SYSTEM. (TYPICAL)
8. PROVIDE NEW RECESSED MOUNTED 15/20A, 125V DUPLEX RECEPTACLE C/W OUTLET BOX, COVER PLATE CONDUIT AND WIRING. CCT AS INDICATED. (TYPICAL)
9. COORDINATE LOCATION OF ELECTRICAL PANEL WITH DRINKING FOUNTAIN AND DOOR OPERATOR PADDLE. INFILL WALL AS REQUIRED, REFER TO ARCHITECTURAL.
10. PROVIDE RECESSED MOUNTED POWER AND TELECOMM/DATA FLOOR BOX WITH 2 X 15A, 125V DUPLEX RECEPTACLES C/W CONDUIT & WIRING AND CONDUIT & PULL-CORD SYSTEMS FOR BOTH POWER AND TELECOMMUNICATIONS AS NOTED. LOCATION SHOWN IS FOR ILLUSTRATION ONLY. FINAL LOCATION TO BE DETERMINED WITH FUTURE FURNITURE LAYOUT. FLOOR BOX SYSTEM AND INSTALLATION TO ALLOW FOR COMMUNICATIONS DEVICES OUTLINED IN CONTRACT TELECOMM. / DATA PACKAGE FROM FANCOM. THOMAS AND BETTS # 665-C1 OR EQUIVALENT. (TYPICAL)
11. CONDUITS SERVING FLOOR BOX TO BE RUN IN CONCRETE FLOOR SLAB. PROVIDE 1 X 21MM CONDUIT FOR POWER, 1 X 27MM CONDUIT FOR DATA, AND 1 X 27MM CONDUIT FOR HDMI. SCAN AND SAW CUT FLOOR TO INSTALL NEW CONDUITS AND FINISH TO SUIT ARCHITECTURAL FINISHES. REFER TO FANCOM DRAWINGS FOR TELECOM DETAILS. (TYPICAL)
12. PROVIDE SURFACE MOUNTED 20A,125V GFCI, DUPLEX RECEPTACLE C/W FS OUTLET BOX AND WEATHERPROOF COVERPLATE LOCATED IN ELEVATOR PIT AT APPROX. 600mm ABOVE BOTTOM OF PIT. COORDINATE EXACT LOCATION AND HEIGHT WITH ELEVATOR CONTRACTOR AND ELEVATOR SHOP DRAWINGS. RECEPTACLE TO BE FED FROM BRANCH CIRCUIT FOR RECEPTACLE AT TOP OF SHAFT. REFER TO DRAWING E23.
13. PROVIDE OUTLET BOX, CONDUIT AND PULL STRINGS FOR DOOR OPERATOR. REFER TO ARCHITECTURAL DRAWINGS FOR EXACT MOUNTING HEIGHT AND LOCATION OF DOOR PADDLES. REFER TO HARDWARE SPECIFICATIONS. (TYPICAL)
14. PROVIDE CONDUITS AND PULL STRINGS FOR EMERGENCY CALL SYSTEM / DOOR OPERATOR c/w PUSH BUTTONS, 2 x REMOTE ANNUNCIATORS, AND LOW VOLTAGE TRANSFORMER. REFER TO ARCHITECTURAL DRAWINGS FOR EXACT MOUNTING HEIGHT AND LOCATION OF PUSH BUTTONS. CALL SYSTEM TO BE INTEGRATED WITH DOOR OPERATOR. REFER TO HARDWARE SPECIFICATIONS. REFER TO 3/E30 FOR DETAILS. (TYPICAL)
15. PROVIDE NEW FEEDERS COMPLETE WITH NEW BREAKERS AND COORDINATE SHUTDOWN FOR EACH PANEL TO BE REPLACED. RECONNECT EXISTING BRANCH CIRCUIT WIRING TO NEW PANEL. COORDINATE BREAKER LAYOUT AND CIRCUIT WIRING TO MATCH EXISTING. PROVIDE UPDATED PANEL SCHEDULE WITH LOADS IDENTIFIED.
16. ALL NEW EMERGENCY POWER EQUIPMENT (SPLITTER, DP-1E, DP-1X, TX-1X, TX-1E, ATS-1X, ATS-1E, DP-2X, AND DP-2E) TO BE INSTALLED IN ELECTRICAL ROOM FOLLOWING THE COORDINATED DEMOLITION OF THE EXISTING I.T. EQUIPMENT ON THE WALL SHOWN.
17. PROVIDE NEW H.O.A. STARTERS c/w DISCONNECTS AND WIRING FROM NEW ESSENTIAL ELECTRICAL PANEL DP-2X FOR EF3, EF3A, AC3, AND AC3A SERVING WING A. INSTALL STARTERS IN EXISTING SEWAGE ROOM ADJACENT TO EXISTING MCC-1, PRIOR TO DEMOLITION OF MCC-1.
18. MCC-1 TO BE REMOVED AS OUTLINED IN DEMOLITION DRAWING DE10.
19. RETAIN ALL EXISTING ELECTRICAL SYSTEMS SERVING DOOR. SYSTEMS TO BE REINSTATED TO DOOR FOLLOWING REPLACEMENT AND RECONNECTED AS NECESSARY.
20. PROVIDE 120V GFCI DUPLEX RECEPTACLE FOR WATER FOUNTAIN. COORDINATE WITH SHOP DRAWING AND ARCHITECTURAL DRAWINGS FOR EXACT LOCATION AND MOUNTING HEIGHT FOR POINT OF CONNECTION. (TYPICAL)
21. PROVIDE 120VAC / 24VAC TRANSFORMER MOUNTED IN JUNCTION BOX, SIZED TO SUIT, IN CEILING SPACE FOR CODE BLUE EMERGENCY CALL STATION. PROVIDE CONDUIT AND WIRING FROM TRANSFORMER TO CODE BLUE BOX. REFER TO FANCOM DRAWINGS FOR COMMUNICATIONS REQUIREMENTS. CONTRACTOR TO PROVIDE MODEL CODE BLUE CB-4-S SIGNATURE CALL BOX WITH HARDWIRE POWER CONNECTION. (TYPICAL)
22. EXISTING FIRE ALARM PANEL FED FROM DEMOLISHED PANEL X. CONTRACTOR TO VERIFY EXISTING BREAKER SIZE AND REFEED FIRE ALARM PANEL FROM NEW BREAKER AS INDICATED.
23. PROVIDE NEW RECESS MOUNTED NEMA L6-20 TWIST LOCK RECEPTACLE AS INDICATED FOR I.T. RACKS. COORDINATE EXACT LOCATION OF RECEPTACLES ON SITE WITH I.T. CONTRACTOR.
24. PROVIDE NEW SURFACE MOUNTED 120V RELAY PANEL c/w TIME CLOCK FOR CONTROLLED RECEPTACLES. RELAY PANEL TO CONTROL INDICATED RECEPTACLE CIRCUITS FROM PANEL B1-1. RECEPTACLES CONTROLLED FROM PANEL B1-1 AND RELAY PANEL TO BE CLEARLY LABELLED AS CONTROLLED RECEPTACLE. COORDINATE PROGRAMMING OF TIMER WITH OWNER.
25. RECEPTACLES MARKED "RLY" TO BE CONTROLLED VIA RELAY PANEL IN ELECTRICAL ROOM 118. (TYPICAL)
26. PROVIDE HARDWIRED POP-UP 120V RECEPTACLE C/W 2 X USB PORTS, BLACK IN COLOUR, RECESSED IN COUNTER TOP MILLWORK. SIMILAR TO LEW ELECTRIC # PUFP-CT-BK-2USB. PROVIDE 6-PORT COMMUNICATIONS EQUIVALENT (LEW ELECTRIC # PUFP-CT-BK-6PORT) C/W CONDUIT AND PULL STRING BACK TO CEILING SPACE, INSTALLED ADJACENT TO POP-UP RECEPTACLE FOR COMMUNICATIONS CONTRACTOR.
27. PROVIDE 120V, 15A CIRCUIT TERMINATED IN JUNCTION BOX FOR AUTOMATIC SINKS. LOW VOLTAGE TRANSFORMER TO BE SUPPLIED BY MECHANICAL CONTRACTOR. COORDINATE WITH MECHANICAL CONTRACTOR FOR EXACT LOCATION OF JUNCTION BOX / CIRCUIT.
28. PROVIDE JUNCTION BOX WITH 120V CIRCUIT AS INDICATED FOR ACCESS CONTROL / MAG LOCK POWER SUPPLIES. REFER TO HARDWARE SPECIFICATIONS. COORDINATE ON SITE WITH SECURITY / I.T. CONTRACTOR FOR EXACT LOCATION. (TYPICAL OF 7)
29. PROVIDE NEW WALL MOUNTED GROUND BUS c/w STANDOFF BUSHINGS TIED BACK TO MAIN GROUND BUS IN ELECTRICAL ROOM 118. ALL I.T. EQUIPMENT TO BE BONDED TO NEW GROUND BUS. COORDINATE EXACT LOCATION WITH I.T. EQUIPMENT.
30. PROVIDE NEW METER TYPE SCHNEIDER ION8240 c/w CT/PTs AND ENCLOSURE TIED INTO EMERGENCY FEEDER CIRCUIT AND NETWORKED INTO UNIVERSITY NETWORK.
31. INTERCOM MASTER PHONE STATION (ICMS): PROVIDE FLUSH WALL MOUNT SINGLE GANG OUTLET BOX AT 1100mm A.F.F. (VERIFY LOCATION AND HEIGHT WITH BUILDING OWNER) C/W CONCEALED 21mm EMT CONDUIT WITH NYLON BUSHINGS, PULL CORD STUBBED INTO CEILING SPACE FOR POWER SUPPLY FEED. (NOTE FOR WALL MOUNTED TYPE INTERCOM PHONE) TYPICAL.
32. INTERCOM SUBSTATION PHONE (ICSP): PROVIDE FLUSH WALL MOUNT SINGLE GANG OUTLET BOX MOUNTED AT (400mm OR 1100mm A.F.F. (VERIFY LOCATION AND HEIGHT WITH BUILDING OWNER) C/W 21mm EMT CONDUIT SYSTEM WITH NYLON BUSHINGS, PULL CORD CONCEALED IN WALLS AND THROUGH CEILING SPACE TO ICMP OUTLET BOX FOR PHONE TO PHONE INTERCOM WIRING.
33. PROVIDE 15A 125V DUPLEX RECEPTACLE C/W OUTLET BOX, COVER PLATE CONDUIT AND WIRING. WALL MOUNT AT APPROX. 150mm ABOVE ACCESSIBLE CEILING. CIRCUIT AS INDICATED

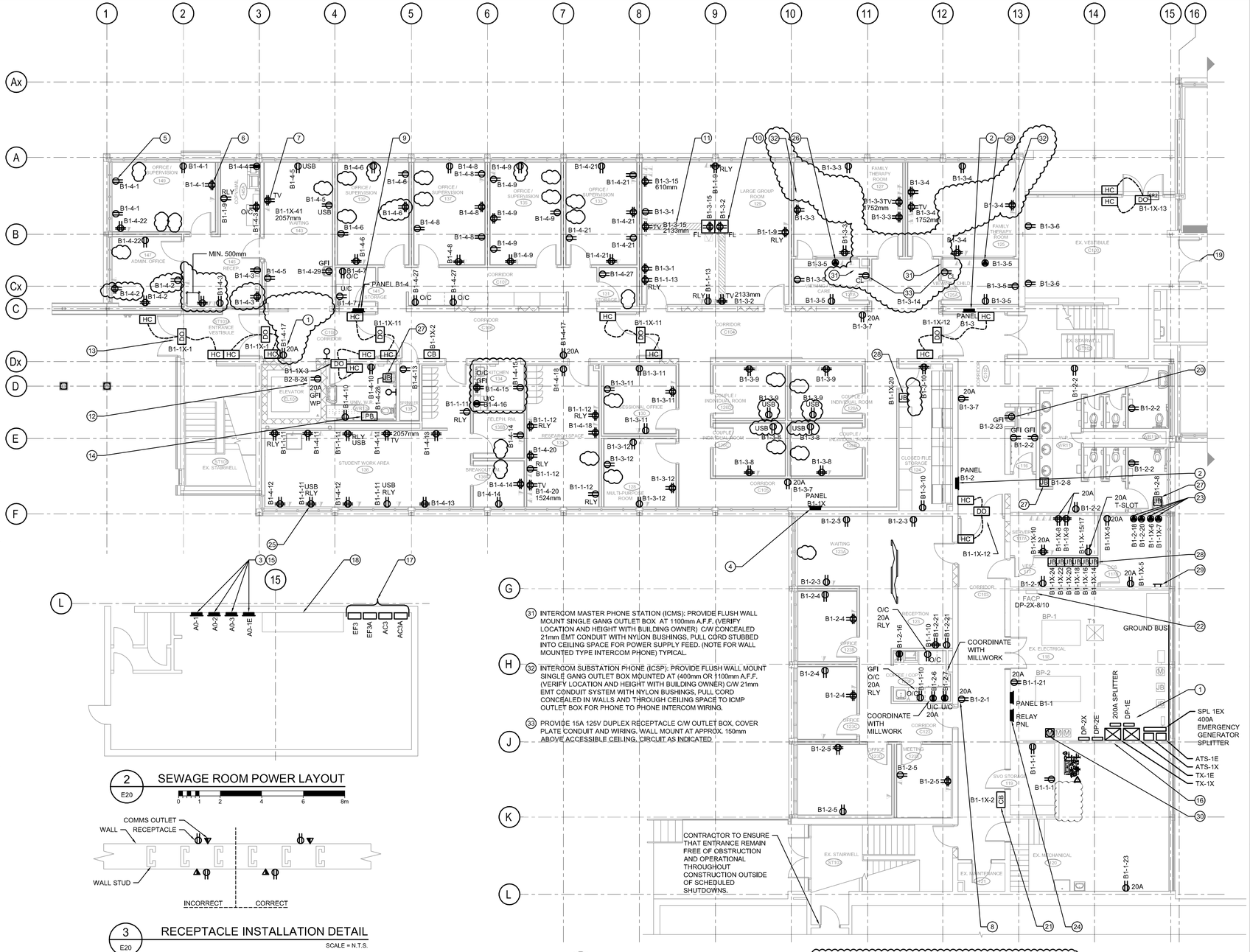

1 / E20 POWER LAYOUT WING B LEVEL 1

CONTRACTOR TO COORDINATE ON SITE EXACT LOCATIONS WITH BUILDING OWNER, BUILDING OWNERS FURNITURE SYSTEM LAYOUTS AND ALL MILLWORK PRIOR TO START OF WORK AND INSTALLATION OF ANY POWER AND/OR TELECOM DATA OUTLETS IN ALL ROOMS.

2 / E20 SEWAGE ROOM POWER LAYOUT

3 / E20 RECEPTACLE INSTALLATION DETAIL

SCALE = N.T.S.

DEMOLITION NOTES

THIS DRAWING IS TO BE READ IN CONJUNCTION WITH THE DEMOLITION DRAWINGS. ALL SERVICES TO WING "A" TO REMAIN OPERATIONAL FOR DURATION OF CONSTRUCTION WITH LIMITED SHUT DOWN (WEEKENDS) FOR TRANSFER OF SERVICES.

1. VERIFY ALL CIRCUITS AND LOADS SERVED IN PANELS P, R, U, AND T. IDENTIFY CIRCUITS WHICH FEED WING "A" TO COORDINATE SHUTDOWN AND REPLACEMENT OF PANELS. COORDINATE WITH THE OWNER AND ENGINEER TO VERIFY THE USE OF THESE CIRCUITS.
2. PROVIDE NEW FEEDERS FROM PANEL BP-2 COMPLETE WITH NEW BREAKERS AND COORDINATE SHUTDOWN SHOULD PANELS P,R,T, AND U BE REPLACED AS A SEPARATELY PRICED ITEM. RECONNECT EXISTING BRANCH CIRCUIT WIRING TO NEW PANEL. COORDINATE BREAKER LAYOUT AND CIRCUIT WIRING TO MATCH EXISTING. PROVIDE UPDATED PANEL SCHEDULE WITH LOADS IDENTIFIED. PROVIDE SEPARATE COST FOR REPLACEMENT OF PANELS. OTHERWISE, ALLOW FOR RECONNECTION OF EXISTING FEEDERS TO PANEL BP-2.
3. COORDINATE WITH UNIVERSITY IT AND IT CONTRACTOR TO HAVE THE EXISTING IT INSTALLATIONS IN THE ELECTRICAL ROOM REMOVED TO ALLOW FOR INSTALLATION OF EMERGENCY DISTRIBUTION EQUIPMENT.
   - 3.1. INSTALL TWO (2) NEW AUTOMATIC TRANSFER SWITCHES COMPLETE WITH CONDUIT, POWER, AND CONTROL WIRING (ONE EACH FOR ESSENTIAL AND NON-ESSENTIAL POWER).
   - 3.2. INSTALL TWO (2) NEW STEP-DOWN TRANSFORMERS 600-120/208V (ONE EACH ESSENTIAL AND NON-ESSENTIAL POWER).
   - 3.3. INSTALL THREE (3) NEW PANELS COMPLETE WITH CONDUIT AND WIRING (600V ESSENTIAL, 120/208V ESSENTIAL, 120/208V NON-ESSENTIAL.
   - 3.4. COORDINATE WITH UNIVERSITY AND WING "A" TENANTS TO SHUT DOWN PANELS Ex4, X, Y, U, AND BB. EXTEND EXISTING PANEL FEEDER TO NEW ESSENTIAL AND NON-ESSENTIAL PANELS. PROVIDE SPLICE BOX FOR EACH PANEL FEEDER TO BE EXTENDED. NEW FEEDERS SHALL BE INSTALLED PRIOR TO SHUT-DOWN AND CONNECTED TO THE SPLICE BOX. EXISTING FEEDERS SHALL BE RE-ROUTED TO THE SPLICE BOX.
4. PROVIDE NEW STARTERS COMPLETE WITH WIRING FROM NON-ESSENTIAL ELECTRICAL PANEL DP-2E. LIST EQUIPMENT AND INSTALL STARTER FOR ALL EXISTING WING "A" MECHANICAL EQUIPMENT. INSTALL STARTERS IN MECHANICAL ROOM ADJACENT TO THE EXISTING MCC, PRIOR TO THE REMOVAL OF THE MCC. COORDINATE SHUTDOWN AND EXTEND EXISTING WIRING FROM EXISTING MCC TO NEW STARTER. NOTE THAT THE MCC CANNOT BE REMOVED OR DE-ENERGIZED UNTIL THE NEW EMERGENCY DISTRIBUTION SYSTEM HAS BEEN INSTALLED AND ENERGIZED. PROVIDE SEPARATE COST TO CARRY OUT THIS SCOPE
5. DISCONNECT EXISTING FEED FROM PANEL BP-1 TO PANEL EBP-1. DISCONNECT EXISTING EMERGENCY FEED TO PANEL EBP-1. DEMOLISH THE EXISTING MANUAL TRANSFER SWITCH.

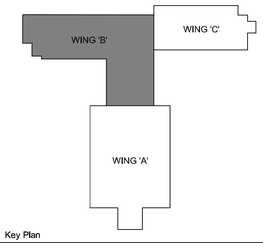

Key Plan

DO NOT SCALE DRAWINGS:

Contractors must check and verify all site conditions. Notify the Owner's Representative in writing before proceeding with the work if discrepancies are evident between the drawings and the site condition. No extras to the contract will be allowed if discrepancies were evident prior to start of work.

UNEXPECTED DISCOVERY OF ASBESTOS:

Where a friable material is discovered during construction, renovations and/or demolition, and it is suspected to contain asbestos, the Contractor must stop all work that may disturb the material. The Contractor shall advise the Owner of the discovery and await instructions from the owner.

A / B — A = Detail number; B = Drawing number where detailed

NO.	ISSUED	BY	DATE
2	ISSUED FOR CONVENIENCE	TA	APR 12, 2019
1	POST-TENDER ADDENDUM N0.1	TA	FEB 26, 2019
0	ISSUED FOR PERMIT & TENDER	TA	NOV 2, 2018

Orientation

Seal

Seal

UNIVERSITY of GUELPH
Design, Engineering & Construction
Physical Resources
Guelph, Ontario, N1G 2W1

Consultant www.jlrichards.ca
J.L.Richards ENGINEERS · ARCHITECTS · PLANNERS

Project
BUILDING #046 RENOVATIONS

Drawing Title
ELECTRICAL POWER LAYOUT WING B LEVEL 1

Project No.
504034

Location
UNIVERSITY OF GUELPH BUILDING #46

Scale: AS INDICATED	Date: APR 12, 2019
Drawn by: AM	Drawing No. E20
Checked By: HM	
Approved By: HM	
JLR #: 27915	

Cad File No. ----

GENERAL NOTES:

A. REFER TO DRAWING E32 FOR FIRE ALARM RISER DETAILS.

B. CONTRACTOR TO PROVIDE ASSISTANCE IN COMMISSIONING OF MAG LOCK CONTROLS.

DRAWING NOTES:

1. PROVIDE NEW FIRE ALARM PULL STATION TIED INTO EXISTING ADDRESSABLE SYSTEM WIRING.
2. PROVIDE NEW SMOKE DETECTOR WITH AUXILIARY CONTACTS TIED TO ELEVATOR CONTROLLER. TIE SMOKE ALARM INTO EXISTING ADDRESSABLE SYSTEM WIRING.
3. EXISTING FIRE ALARM CONTROL PANEL. PROVIDE KEY SWITCH AT EXISTING PANEL TO RESET MAG LOCK CONTROLLER. PROVIDE 21MM EMT CONDUIT FROM KEY SWITCH TO MAG LOCK POWER SUPPLIES c/w 2 x #18 AWG.
4. PROVIDE NEW BELL STROBE TIED INTO EXISTING MAIN FIRE ALARM CONTROL PANEL.
5. PROVIDE NEW SMOKE DETECTOR, CEILING MOUNTED WHERE SHOWN. (TYPICAL)
6. PROVIDE NEW FIRE ALARM PULL STATION c/w AUXILIARY CONTACTS TIED INTO MAG LOCK POWER SUPPLY LOCATED IN VESTIBULE 117. PROVIDE 2c x #18 AWG IN 21mm EMT CONDUIT FROM PULL STATION TO MAG LOCK POWER SUPPLY. MAG LOCK TO RELEASE UNDER ANY FIRE ALARM CONDITION. (TYPICAL)
7. TERMINATE AT MAG LOCK POWER SUPPLIES. COORDINATE WITH I.T. CONTRACTOR.

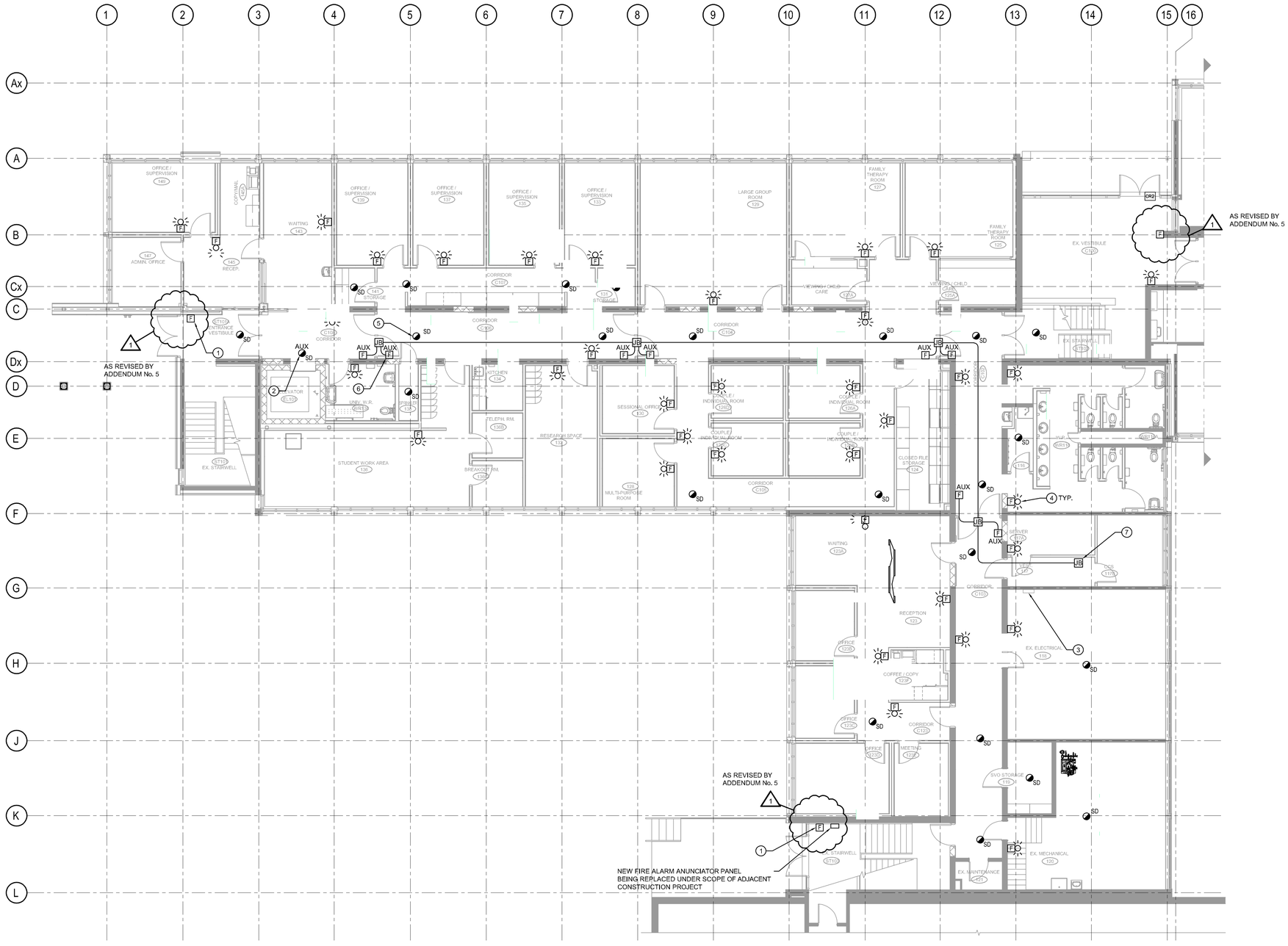

1 E21 FIRE ALARM LAYOUT WING B LEVEL 1

0 1 2 4 6 8m

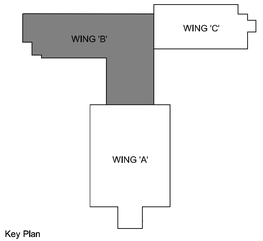

Key Plan

DO NOT SCALE DRAWINGS:

Contractors must check and verify all site conditions. Notify the Owner's Representative in writing before proceeding with the work if discrepancies are evident between the drawings and the site condition. No extras to the contract will be allowed if discrepancies were evident prior to start of work.

UNEXPECTED DISCOVERY OF ASBESTOS:

Where a friable material is discovered during construction, renovations and/or demolition, and it is suspected to contain asbestos, the Contractor must stop all work that may disturb the material. The Contractor shall advise the Owner of the discovery and await instructions from the owner.

A/B — A = Detail number; B = Drawing number where detailed

NO.	ISSUED	BY	DATE
2	ISSUED FOR CONVENIENCE	TA	APR 12, 2019
1	REISSUED FOR PERMIT AND ADDENDUM 5	TA	DEC 7, 2018
0	ISSUED FOR PERMIT & TENDER	TA	NOV 2, 2018

Orientation

Seal

Seal

UNIVERSITY of GUELPH
Design, Engineering & Construction
Physical Resources
Guelph, Ontario. N1G 2W1

Consultant
www.jlrichards.ca
J.L.Richards
ENGINEERS · ARCHITECTS · PLANNERS

Project
BUILDING #046
RENOVATIONS

Drawing Title
ELECTRICAL
FIRE ALARM LAYOUT WING B LEVEL 1

Project No.
504034

Location
UNIVERSITY OF GUELPH
BUILDING #46

Scale: AS INDICATED	Date: APR 12, 2019
Drawn by: AM	Drawing No.
Checked By: HM	E21
Approved By: HM	
JLR #: 27915	

Cad File No. ----

GENERAL NOTES:

A. COORDINATE WIRING TO MECHANICAL EQUIPMENT AS PER MOTOR STARTER AND CONTROL LIST REQUIREMENTS ON DRAWING E31.

B. COORDINATE WITH MECHANICAL EQUIPMENT PROVIDER TO TEST AND COMMISSION EQUIPMENT.

DRAWING NOTES

1. PROVIDE DEDICATED 120V CIRCUIT INSTALLED IN CEILING MOUNTED JUNCTION BOX FOR POWER TO MECHANICAL VAV BOXES. CIRCUIT AS INDICATED. MECHANICAL CONTRACTOR TO SUPPLY TRANSFORMER AND LOW VOLTAGE WIRING. COORDINATE EXACT LOCATION ON SITE WITH MECHANICAL CONTRACTOR. (TYPICAL OF 4)
2. PROVIDE HARDWIRED CONNECTION TO MECHANICAL EQUIPMENT. CIRCUIT AS INDICATED. REFER TO DRAWING E31 FOR DETAILS. (TYPICAL)
3. CONDUITS FEEDING PANELS LOCATED ON SECOND FLOOR TO BE RUN VERTICALLY THROUGH NEW ELECTRICAL CHASE.
4. REFER TO SINGLE LINE DIAGRAM E02 FOR FEEDER DETAILS. CONDUITS TO BE RUN FROM EXISTING PANEL BP-2 TO RESPECTIVE PANELS THROUGH MAIN CORRIDOR C103 CEILING SPACE. COORDINATE CONDUIT INSTALLATION ON SITE WITH MECHANICAL CONTRACTOR / DUCT WORK.
5. COORDINATE INSTALLATION OF RECEPTACLE FOR SUMP PUMP WITH MECHANICAL CONTRACTOR.
6. PROVIDE HARDWIRED CONNECTION TO GLYCOL FILLING STATION. COORDINATE WITH MECHANICAL CONTRACTOR.
7. PROVIDE FLUSH MOUNTED PUSH BUTTON FOR SUPPLY / PURGE FANS. PUSH BUTTON TO BE TIED INTO BAS SYSTEM FOR FAN OPERATION. REFER TO DRAWING E31 AND MECHANICAL DRAWINGS FOR DETAILS. COORDINATE ON SITE WITH MECHANICAL CONTRACTOR AND OWNER FOR EXACT LOCATION. (TYPICAL OF 2)
8. WASHROOM EXHAUST FANS TO BE TIED INTO LIGHTING OCCUPANCY SENSOR CIRCUIT. REFER TO LIGHTING CONTROL SCHEMATICS. (TYPICAL OF 2)

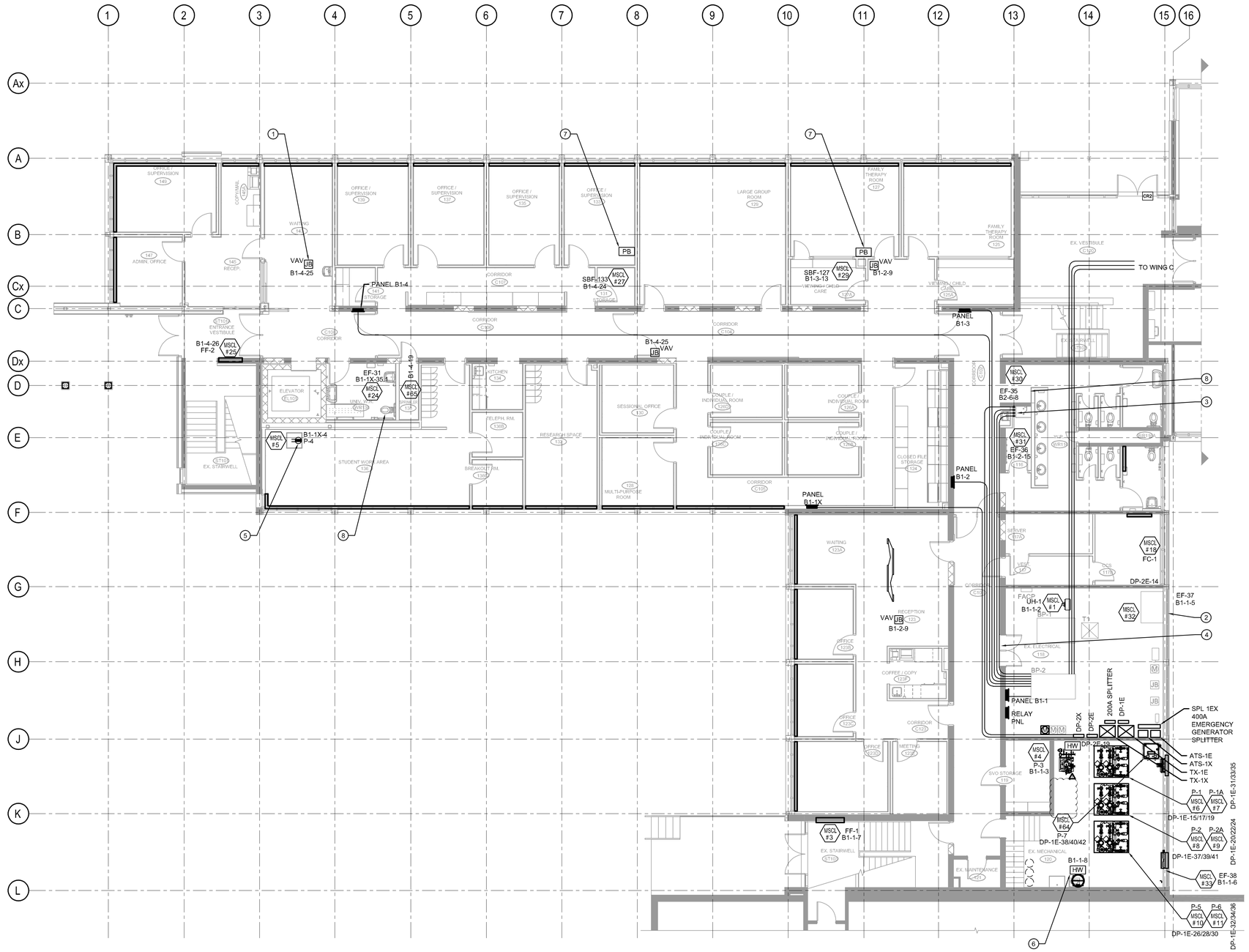

1 E22 MECHANICAL EQUIPMENT WING B LEVEL 1

0 1 2 4 6 8m

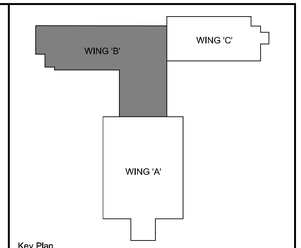

Key Plan

DO NOT SCALE DRAWINGS:

Contractors must check and verify all site conditions. Notify the Owner's Representative in writing before proceeding with the work if discrepancies are evident between the drawings and the site condition. No extras to the contract will be allowed if discrepancies were evident prior to start of work.

UNEXPECTED DISCOVERY OF ASBESTOS:

Where a friable material is discovered during construction, renovations and/or demolition, and it is suspected to contain asbestos, the Contractor must stop all work that may disturb the material. The Contractor shall advise the Owner of the discovery and await instructions from the owner.

A / B — A = Detail number; B = Drawing number where detailed

NO.	ISSUED	BY	DATE
2	ISSUED FOR CONVENIENCE	TA	APR 12, 2019
1	POST-TENDER ADDENDUM N0.1	TA	FEB 26, 2019
0	ISSUED FOR PERMIT & TENDER	TA	NOV 2, 2018

Orientation

Seal

Seal

UNIVERSITY of GUELPH
Design, Engineering & Construction
Physical Resources
Guelph, Ontario. N1G 2W1

Consultant www.jlrichards.ca
J.L.Richards ENGINEERS · ARCHITECTS · PLANNERS

Project
BUILDING #046
RENOVATIONS

Drawing Title
ELECTRICAL
MECHANICAL EQUIPMENT
WING B LEVEL 1

Project No.
504034

Location
UNIVERSITY OF GUELPH
BUILDING #46

Scale: AS INDICATED	Date: APR 12, 2019
Drawn by: SO	Drawing No. E22
Checked By: HM	
Approved By: HM	
JLR #: 27915	

Cad File No. ----

GENERAL NOTES

A. CAREFULLY COORDINATE ALL ELECTRICAL WORK WITH ALL OTHER TRADES ON SITE TO ENSURE NO CONFLICTS OR INTERFERENCES OCCUR.

B. PROVIDE ALL FASTENERS, FITTINGS, JUNCTION, OUTLET, BACKBOXES, CONDUIT, WIRING AND HARDWARE REQUIRED TO ENSURE A COMPLETE AND OPERATIONAL SYSTEM. REFER TO SPECIFICATIONS.

C. WHERE CONDUIT SYSTEMS CROSS BUILDING EXPANSION JOINTS PROVIDE JUNCTION BOXES ON EITHER SIDE OF JOINT C/W METAL FLEX CONDUIT & WIRING SYSTEM TO BRIDGE JOINT AND ALLOW FOR BUILDING MOVEMENT. REFER TO DETAILS ON DRAWINGS AND / OR SPECIFICATIONS.

D. ALL JUNCTION BOX CONDUIT AND WIRING SYSTEMS ARE TO BE CONCEALED IN PARTITIONS WALL FLOOR SLABS AND CEILING SPACES UNLESS NOTED OTHERWISE.

E. PROVIDE CHANNEL SUPPORT HANGERS, MIN. 19mm THREADED ROD TRAPEZE HANGER ASSEMBLIES FOR MOUNTING ALL JUNCTION BOX CONDUIT, RACEWAY SYSTEMS, SUPPORT SYSTEM HANGERS TO BE SPACED AT NOT MORE THAT 2400mm APART UNLESS NOTED OTHERWISE. REFER TO SPECIFICATIONS.

F. ALL ELECTRICAL RACEWAY / SUPPORT SYSTEMS TO BE SECURED TO MEET SEISMIC REQUIREMENTS.

G. COORDINATE EXACT LOCATION OF OUTLETS/DEVICES WITH ARCHITECTURAL DRAWINGS, MILLWORK DETAILS FANCOM DRAWINGS, AND BUILDING OWNER'S A/V CONSULTANT DRAWINGS, AND EQUIPMENT REQUIREMENTS.

H. MOUNTING HEIGHT OF OUTLETS, DEVICES, SWITCHES, CONTROLS IS FROM FINISHED FLOOR TO CENTER-LINE OF EQUIPMENT UNLESS NOTED OTHERWISE. REFER TO ELECTRICAL SPECIFICATION.

I. COORDINATE ON SITE; DRILL / CUT OPENINGS IN EXISTING PARTITION WALLS, FLOOR SLAB TO FACILITATE INSTALLATION OF ELECTRICAL SYSTEMS. PATCH, REPAIR AND REPAINT ALL OPENINGS TO MATCH EXISTING AND/OR NEW FINISH REQUIREMENTS.

J. SEAL ALL THROUGH WALL, FLOOR SLAB PENETRATIONS WITH APPROVED FIRE STOP SEALANT.

K. PROVIDE LAMACOID NAMEPLATE AND P-TOUCH CIRCUIT IDENTIFICATION ON EQUIPMENT, COVER PLATES, JUNCTION BOXES. REFER TO SPECIFICATION FOR ADDITIONAL INFORMATION.

L. THE WORD "PROVIDE" USED ON THESE DRAWINGS, MEAN THE CONTRACTOR IS RESPONSIBLE TO SUPPLY, INSTALL, WIRE, CONNECT, CONTROL SETUP, TEST, AND COMMISSION EQUIPMENT, DEVICES, AND/OR LUMINAIRES.

M. ALL ELECTRICAL EQUIPMENT, DEVICE OUTLET BOXES TO BE INSTALLED IN SEPARATE STUD SPACES (SEPARATED BY A STUD) AND PREFERABLY ISOLATED BY MIN. 600mm APART WHERE POSSIBLE FOR WALL ERATED STC 45 OR HIGHER. REFER TO DETAIL 3/E20 ON DRAWINGS.

N. EXPOSED ELECTRICAL BOXES IN WALLS RATED STC 50 AND HIGHER TO BE SEALED

O. CONTRACTOR SHALL COORDINATE AND PROVIDE CUT / CHASE IN EXISTING WALL WHERE REQUIRED TO RECESS CONDUIT INSTALLATION FOR DEVICES INDICATED.

DRAWING NOTES

1. NEW ELECTRICAL PANEL TO BE INSTALLED RECESSED IN WALL WHERE LOCATION / CUT OUT OF PREVIOUSLY DEMOLISHED PANEL EXISTS. EXTEND / PATCH EXISTING WALL CUT OUT AS NECESSARY TO ACCOMMODATE NEW PANEL DIMENSIONS. REFER TO ARCHITECTURAL DRAWINGS FOR FURTHER INFORMATION.
2. EXISTING WALL SHALL BE CUT OPEN TO INSTALL NEW PANEL AND CONDUITS TO CEILING. REINSTATE TO MEET ARCHITECTURAL FINISHES.
3. PROVIDE NEW RECESS MOUNTED 120V DUPLEX RECEPTACLE c/w CONDUIT AND WIRING AS INDICATED. (TYPICAL)
4. PROVIDE NEW RECESS MOUNTED 120V DOUBLE DUPLEX RECEPTACLE c/w CONDUIT AND WIRING AS INDICATED. (TYPICAL)
5. PROVIDE NEW RECESSED MOUNTED 15A, 125V RECEPTACLE AS INDICATED c/w CUSTOM OUTLET BOX, COVER PLATE CONDUIT AND WIRING FOR WALL MOUNTED TELEVISION, SIMILAR TO LEVITON 690. CCT AS INDICATED. REFER TO PLANS FOR MOUNTING HEIGHT. COORDINATE EXACT LOCATION WITH ARCHITECTURAL AND FANCOM DRAWINGS, AND WALL MOUNTED BRACKET SYSTEM. (TYPICAL)
6. PROVIDE OUTLET BOX, CONDUIT AND PULL STRINGS FOR DOOR OPERATOR. REFER TO ARCHITECTURAL DRAWINGS FOR EXACT MOUNTING HEIGHT AND LOCATION OF DOOR PADDLES. REFER TO HARDWARE SPECIFICATIONS. (TYPICAL)
7. PROVIDE CONDUITS AND PULL STRINGS FOR EMERGENCY CALL SYSTEM / DOOR OPERATOR c/w PUSH BUTTONS, 2 x REMOTE ANNUNCIATORS, AND LOW VOLTAGE TRANSFORMER. REFER TO ARCHITECTURAL DRAWINGS FOR EXACT MOUNTING HEIGHT AND LOCATION OF PUSH BUTTONS. CALL SYSTEM TO BE INTEGRATED WITH DOOR OPERATOR. REFER TO HARDWARE SPECIFICATIONS. REFER TO 3/E30 FOR DETAILS. (TYPICAL)
8. PROVIDE DEDICATED 120V DUPLEX RECEPTACLE FOR REFRIGERATOR MOUNTED AT 1200mm A.F.F.
9. PROVIDE DEDICATED 120V DUPLEX RECEPTACLE FOR MICROWAVE. RECEPTACLES TO BE MOUNTED UNDER COUNTER IN MILLWORK. COORDINATE EXACT MOUNTING HEIGHT AND LOCATION WITH ARCHITECTURAL DRAWINGS.
10. PROVIDE 120V DUPLEX RECEPTACLE c/w 2 x INTEGRAL USB CHARGING PORTS SIMILAR TO LEVITON T5632. (TYPICAL)
11. PROVIDE RECESSED MOUNTED FIRE RATED POKE-THROUGH POWER AND TELECOMM/DATA FLOOR BOX WITH 2 X 15A, 125V DUPLEX RECEPTACLES C/W CONDUIT & WIRING AND CONDUIT & PULL-CORD SYSTEMS FOR BOTH POWER AND TELECOMMUNICATIONS AS NOTED. CONTRACTOR TO SCAN AND CORE THROUGH CONCRETE FLOOR SLAB FOR FLOOR BOX INSTALLATION. FLOOR BOX SYSTEM AND INSTALLATION TO ALLOW FOR COMMUNICATIONS DEVICES OUTLINED IN CONTRACT TELECOMM. / DATA PACKAGE FROM FANCOM. THOMAS AND BETTS RPT6 SERIES OR EQUIVALENT. (TYPICAL)
12. CONDUITS SERVING FLOOR BOX TO BE RUN IN UNDER CONCRETE FLOOR SLAB IN CEILING SPACE OF FIRST FLOOR. TERMINATE CONDUITS IN FIRE RATED POKE-THROUGH FLOOR BOX. PROVIDE 1 x 21mm CONDUIT FOR POWER, 1 x 21mm CONDUIT FOR DATA, AND 1 x 27mm CONDUIT FOR HDMI. REFER TO FANCOM DRAWINGS FOR TELECOM DETAILS. (TYPICAL)
13. NOT USED
14. PROVIDE 120V GFCI DUPLEX RECEPTACLE FOR WATER FOUNTAIN. COORDINATE WITH SHOP DRAWING AND ARCHITECTURAL DRAWINGS FOR EXACT LOCATION AND MOUNTING HEIGHT FOR POINT OF CONNECTION. (TYPICAL)
15. PROVIDE SURFACE MOUNTED 20A,120V GFCI, DUPLEX RECEPTACLE C/W FS OUTLET BOX AND WEATHERPROOF COVERPLATE LOCATED AT TOP OF ELEVATOR SHAFT. COORDINATE EXACT LOCATION AND HEIGHT WITH ELEVATOR CONTRACTOR AND ELEVATOR SHOP DRAWINGS.
16. PROVIDE 2 x 120V, 15A MOTOR RATED LOCKABLE TOGGLE SWITCHES. 1 x TOGGLE SWITCH FOR ELEVATOR CAB GFCI RECEPTACLE, AND 1 x TOGGLE SWITCH FOR ELEVATOR CAB LIGHTING AND VENTILATION. COORDINATE FEEDERS WITH ELEVATOR SHOP DRAWINGS AND ELEVATOR CONTRACTOR.
17. PROVIDE 600V, 3P DISCONNECT c/w AUX CONTACTS FOR ELEVATOR CONTROL PANEL. COORDINATE REQUIREMENTS AND SIZE OF DISCONNECT WITH ELEVATOR SHOP DRAWINGS.
18. PROVIDE 120VAC / 24VAC TRANSFORMER MOUNTED IN JUNCTION BOX, SIZED TO SUIT, IN CEILING SPACE FOR CODE BLUE EMERGENCY CALL STATION. PROVIDE CONDUIT AND WIRING FROM TRANSFORMER TO CODE BLUE BOX. REFER TO FANCOM DRAWINGS FOR COMMUNICATIONS REQUIREMENTS. CONTRACTOR TO PROVIDE MODEL CODE BLUE CB-4-S SIGNATURE CALL BOX WITH HARDWIRE POWER CONNECTION. (TYPICAL) A6.35
19. RECEPTACLES MARKED "RLY" TO BE CONTROLLED VIA RELAY PANEL IN ELECTRICAL ROOM 118. (TYPICAL)

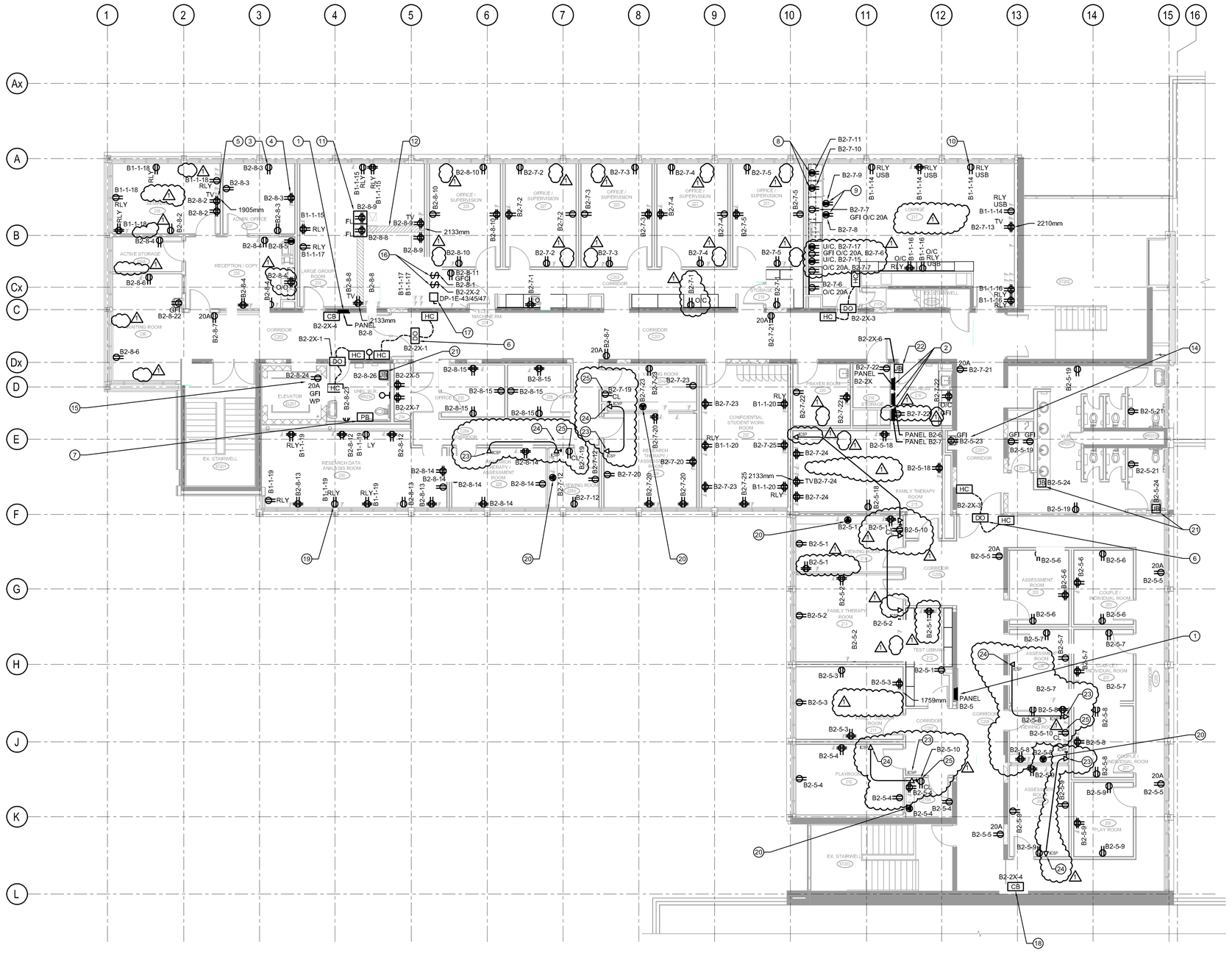

1 / E23 POWER LAYOUT WING B LEVEL 2

0 1 2 4 6 8m

CONTRACTOR TO COORDINATE ON SITE EXACT LOCATIONS WITH BUILDING OWNER, BUILDING OWNERS FURNITURE SYSTEM LAYOUTS AND ALL MILLWORK PRIOR TO START OF WORK AND INSTALLATION OF ANY POWER AND/OR TELECOM DATA OUTLETS IN ALL ROOMS.

20. PROVIDE HARDWIRED POP-UP 120V RECEPTACLE C/W 2 X USB PORTS, BLACK IN COLOUR, RECESSED IN COUNTER TOP MILLWORK. SIMILAR TO LEW ELECTRIC # PUFP-CT-BK-2USB. PROVIDE 6-PORT COMMUNICATIONS EQUIVALENT (LEW ELECTRIC # PUFP-CT-BK-6PORT) C/W CONDUIT AND PULL STRING BACK TO CEILING SPACE, INSTALLED ADJACENT TO POP-UP RECEPTACLE FOR COMMUNICATIONS CONTRACTOR.
21. PROVIDE 120V, 15A CIRCUIT TERMINATED IN JUNCTION BOX IN CEILING SPACE FOR AUTOMATIC SINKS. LOW VOLTAGE TRANSFORMER TO BE SUPPLIED BY MECHANICAL CONTRACTOR. COORDINATE WITH MECHANICAL CONTRACTOR FOR EXACT LOCATION OF JUNCTION BOX / CIRCUIT.
22. PROVIDE JUNCTION BOX WITH 120V CIRCUIT AS INDICATED FOR ACCESS CONTROL / MAG LOCK POWER SUPPLIES. REFER TO HARDWARE SPECIFICATIONS. COORDINATE ON SITE WITH SECURITY / I.T. CONTRACTOR FOR EXACT LOCATION.
23. INTERCOM MASTER PHONE STATION (ICMS): PROVIDE FLUSH WALL MOUNT SINGLE GANG OUTLET BOX AT 1100mm A.F.F. (VERIFY LOCATION AND HEIGHT WITH BUILDING OWNER) C/W CONCEALED 21mm EMT CONDUIT WITH NYLON BUSHINGS, PULL CORD STUBBED INTO CEILING SPACE FOR POWER SUPPLY FEED. (NOTE FOR WALL MOUNTED TYPE INTERCOM PHONE) TYPICAL.
24. INTERCOM SUBSTATION PHONE (ICSP): PROVIDE FLUSH WALL MOUNT SINGLE GANG OUTLET BOX MOUNTED AT (400mm OR 1100mm A.F.F. (VERIFY LOCATION AND HEIGHT WITH BUILDING OWNER) C/W 21mm EMT CONDUIT SYSTEM WITH NYLON BUSHINGS, PULL CORD CONCEALED IN WALLS AND THROUGH CEILING SPACE TO ICMP OUTLET BOX FOR PHONE TO PHONE INTERCOM WIRING.
25. PROVIDE 15A 125V DUPLEX RECEPTACLE C/W OUTLET BOX, COVER PLATE CONDUIT AND WIRING. WALL MOUNT AT APPROX. 150mm ABOVE ACCESSIBLE CEILING. CIRCUIT AS INDICATED

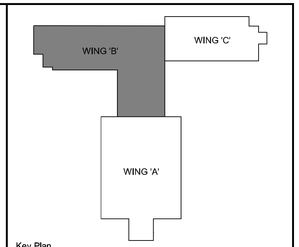

Key Plan

DO NOT SCALE DRAWINGS:

Contractors must check and verify all site conditions. Notify the Owner's Representative in writing before proceeding with the work if discrepancies are evident between the drawings and the site condition. No extras to the contract will be allowed if discrepancies were evident prior to start of work.

UNEXPECTED DISCOVERY OF ASBESTOS:

Where a friable material is discovered during construction, renovations and/or demolition, and it is suspected to contain asbestos, the Contractor must stop all work that may disturb the material. The Contractor shall advise the Owner of the discovery and await instructions from the owner.

A / B — A = Detail number; B = Drawing number where detailed

NO.	ISSUED	BY	DATE
2	ISSUED FOR CONVENIENCE	TA	APR 12, 2019
1	POST-TENDER ADDENDUM N0.1	TA	FEB 26, 2019
0	ISSUED FOR PERMIT & TENDER	TA	NOV 2, 2018

Orientation

Seal

Seal

UNIVERSITY of GUELPH
Design, Engineering & Construction
Physical Resources
Guelph, Ontario, N1G 2W1

Consultant
www.jlrichards.ca
J.L.Richards
ENGINEERS · ARCHITECTS · PLANNERS

Project
BUILDING #046
RENOVATIONS

Drawing Title
ELECTRICAL
POWER LAYOUT WING B
LEVEL 2

Project No.
504034

Location
UNIVERSITY OF GUELPH
BUILDING #46

Scale: AS INDICATED	Date: APR 12, 2019
Drawn by: AM	Drawing No.
Checked By: HM	E23
Approved By: HM	
JLR #: 27915	

Cad File No. ----

GENERAL NOTES:

A. REFER TO DRAWING E32 FOR FIRE ALARM RISER DETAILS.

DRAWING NOTES:

1. PROVIDE NEW BELL STROBE TIED INTO EXISTING MAIN FIRE ALARM CONTROL PANEL c/w CONDUIT AND WIRING. PROVIDE DEDICATED STROBE WIRING TO SUIT LOADING OF STROBES. (TYPICAL)
2. PROVIDE NEW SMOKE DETECTOR WITH AUXILIARY CONTACTS TIED TO ELEVATOR CONTROLLER. TIE SMOKE ALARM INTO EXISTING ADDRESSABLE SYSTEM WIRING.
3. PROVIDE NEW SMOKE DETECTOR. TIE SMOKE ALARM INTO EXISTING ADDRESSABLE SYSTEM WIRING.
4. PROVIDE NEW FIRE ALARM PULL STATION C/W AUXILIARY CONTACTS TIED INTO MAG LOCK POWER SUPPLY LOCATED IN VESTIBULE 117. PROVIDE 2C X #18 AWG IN 21MM EMT CONDUIT FROM PULL STATION TO MAG LOCK POWER SUPPLY. MAG LOCK TO RELEASE UNDER ANY FIRE ALARM CONDITION. (TYPICAL)

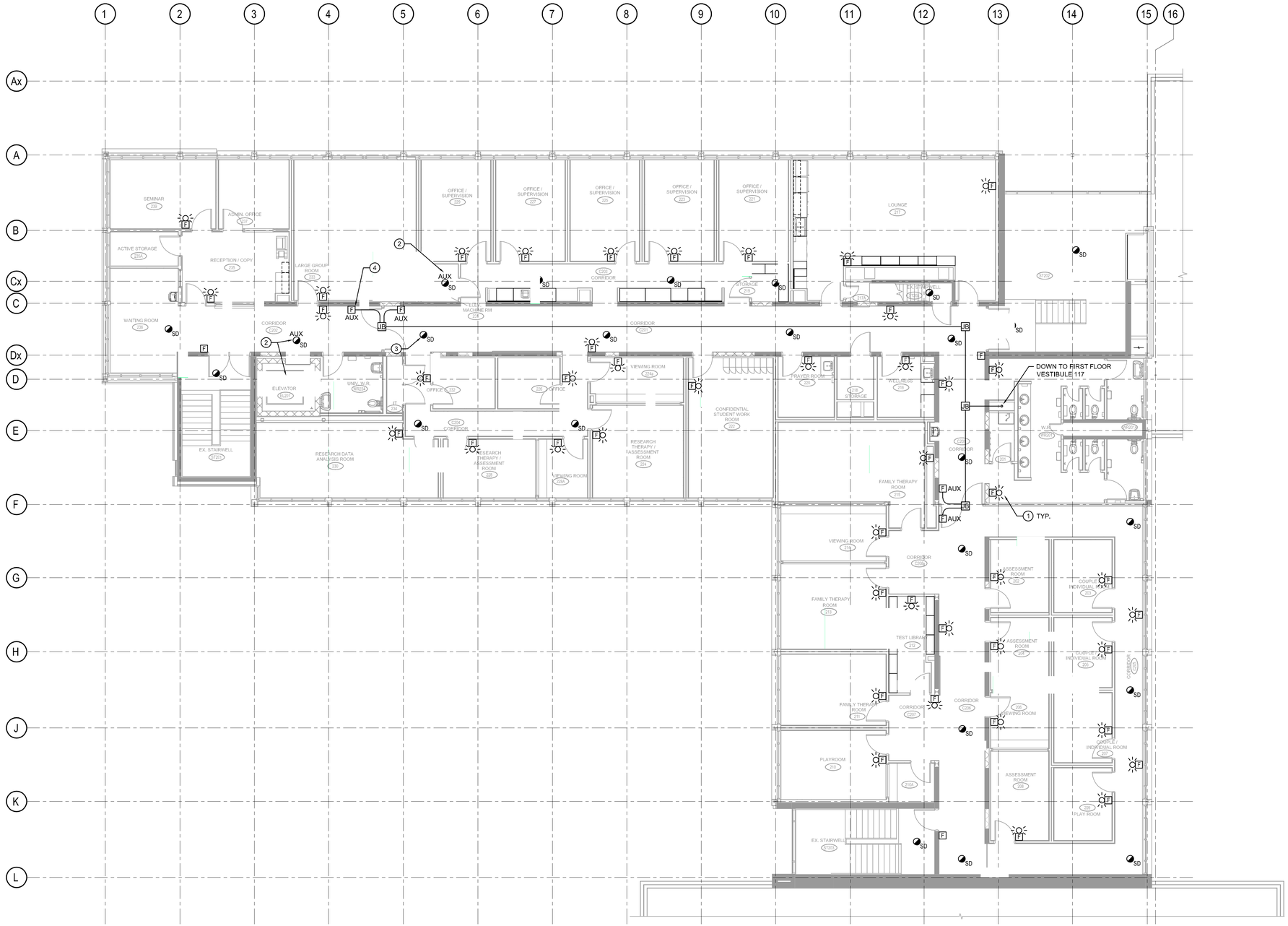

1 / E24 FIRE ALARM LAYOUT WING B LEVEL 2

0 1 2 4 6 8m

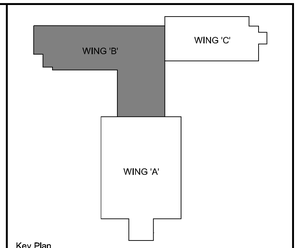

Key Plan

DO NOT SCALE DRAWINGS:

Contractors must check and verify all site conditions. Notify the Owner's Representative in writing before proceeding with the work if discrepancies are evident between the drawings and the site condition. No extras to the contract will be allowed if discrepancies were evident prior to start of work.

UNEXPECTED DISCOVERY OF ASBESTOS:

Where a friable material is discovered during construction, renovations and/or demolition, and it is suspected to contain asbestos, the Contractor must stop all work that may disturb the material. The Contractor shall advise the Owner of the discovery and await instructions from the owner.

A / B — A = Detail number; B = Drawing number where detailed

NO.	ISSUED	BY	DATE
1	ISSUED FOR CONVENIENCE	TA	APR 12, 2019
0	ISSUED FOR PERMIT & TENDER	TA	NOV 2, 2018

Orientation

Seal

Seal

UNIVERSITY of GUELPH
Design, Engineering & Construction
Physical Resources
Guelph, Ontario. N1G 2W1

Consultant
www.jlrichards.ca
J.L.Richards
ENGINEERS · ARCHITECTS · PLANNERS

Project
BUILDING #046
RENOVATIONS

Drawing Title
ELECTRICAL
FIRE ALARM LAYOUT WING B LEVEL 2

Project No.
504034

Location
UNIVERSITY OF GUELPH
BUILDING #46

Scale	Date
AS INDICATED	APR 12, 2019
Drawn by: AM	Drawing No.
Checked By: HM	E24
Approved By: HM	
JLR #: 27915	

Cad File No. ----

GENERAL NOTES:

A. COORDINATE WIRING TO MECHANICAL EQUIPMENT AS PER MOTOR STARTER AND CONTROL LIST REQUIREMENTS ON DRAWING E31.

B. COORDINATE WITH MECHANICAL EQUIPMENT PROVIDER TO TEST AND COMMISSION EQUIPMENT.

DRAWING NOTES

1. PROVIDE DEDICATED 120V CIRCUIT INSTALLED IN CEILING MOUNTED JUNCTION BOX FOR POWER TO MECHANICAL VAV BOXES. CIRCUIT AS INDICATED. MECHANICAL CONTRACTOR TO SUPPLY TRANSFORMER AND LOW VOLTAGE WIRING. COORDINATE EXACT LOCATION ON SITE WITH MECHANICAL CONTRACTOR. (TYPICAL OF 4)
2. PROVIDE HARDWIRED CONNECTION TO MECHANICAL EQUIPMENT. CIRCUIT AS INDICATED. REFER TO DRAWING E31 FOR DETAILS. (TYPICAL)
3. REFER TO SINGLE LINE DIAGRAM E02 FOR FEEDER DETAILS. CONDUITS TO BE RUN FROM EXISTING PANEL BP-2 TO RESPECTIVE PANELS THROUGH MAIN CORRIDOR CEILING SPACE. COORDINATE CONDUIT INSTALLATION ON SITE WITH MECHANICAL CONTRACTOR / DUCT WORK.
4. PROVIDE FLUSH MOUNTED PUSH BUTTON FOR SUPPLY / PURGE FANS. PUSH BUTTON TO BE TIED INTO BAS SYSTEM FOR FAN OPERATION. REFER TO DRAWING E31 AND MECHANICAL DRAWINGS FOR DETAILS. COORDINATE ON SITE WITH MECHANICAL CONTRACTOR AND OWNER FOR EXACT LOCATION. (TYPICAL OF 2)
5. WASHROOM EXHAUST FANS TO BE TIED INTO LIGHTING OCCUPANCY SENSOR CIRCUIT. REFER TO LIGHTING CONTROL SCHEMATICS. (TYPICAL OF 2)

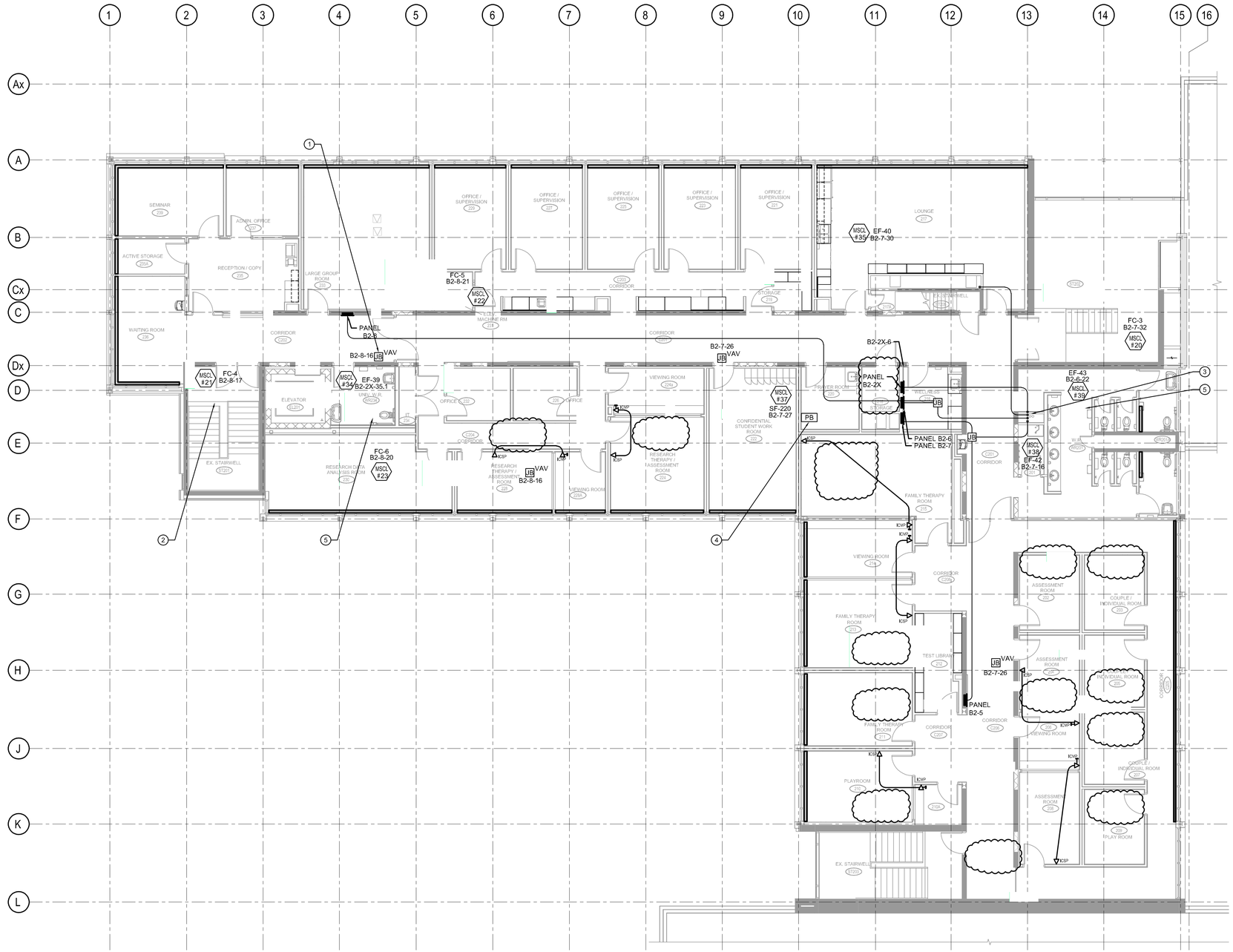

1 E25 MECHANICAL EQUIPMENT WING B LEVEL 2

0 1 2 4 6 8m

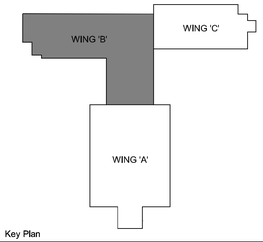

Key Plan

DO NOT SCALE DRAWINGS:

Contractors must check and verify all site conditions. Notify the Owner's Representative in writing before proceeding with the work if discrepancies are evident between the drawings and the site condition. No extras to the contract will be allowed if discrepancies were evident prior to start of work.

UNEXPECTED DISCOVERY OF ASBESTOS:

Where a friable material is discovered during construction, renovations and/or demolition, and it is suspected to contain asbestos, the Contractor must stop all work that may disturb the material. The Contractor shall advise the Owner of the discovery and await instructions from the owner.

A / B — A = Detail number; B = Drawing number where detailed

NO.	ISSUED	BY	DATE
2	ISSUED FOR CONVENIENCE	TA	APR 12, 2019
1	POST-TENDER ADDENDUM N0.1	TA	FEB 26, 2019
0	ISSUED FOR PERMIT & TENDER	TA	NOV 2, 2018

Orientation

Seal

Seal

UNIVERSITY of GUELPH
Design, Engineering & Construction
Physical Resources
Guelph, Ontario. N1G 2W1

Consultant
www.jlrichards.ca
J.L.Richards
ENGINEERS · ARCHITECTS · PLANNERS

Project
BUILDING #046
RENOVATIONS

Drawing Title
ELECTRICAL
MECHANICAL EQUIPMENT
WING B LEVEL 2

Project No.
504034

Location
UNIVERSITY OF GUELPH
BUILDING #46

Scale: AS INDICATED	Date: APR 12, 2019
Drawn by: SO	Drawing No.
Checked By: HM	E25
Approved By: HM	
JLR #: 27915	

Cad File No. ----

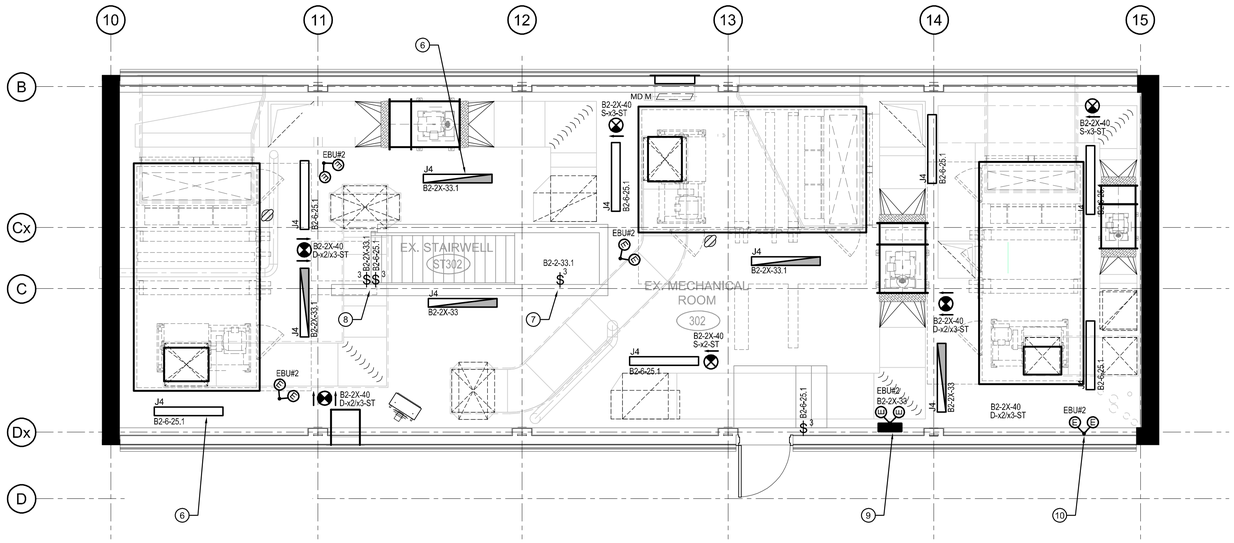

1 E26 LIGHTING LAYOUT

0 1 2 3 4m

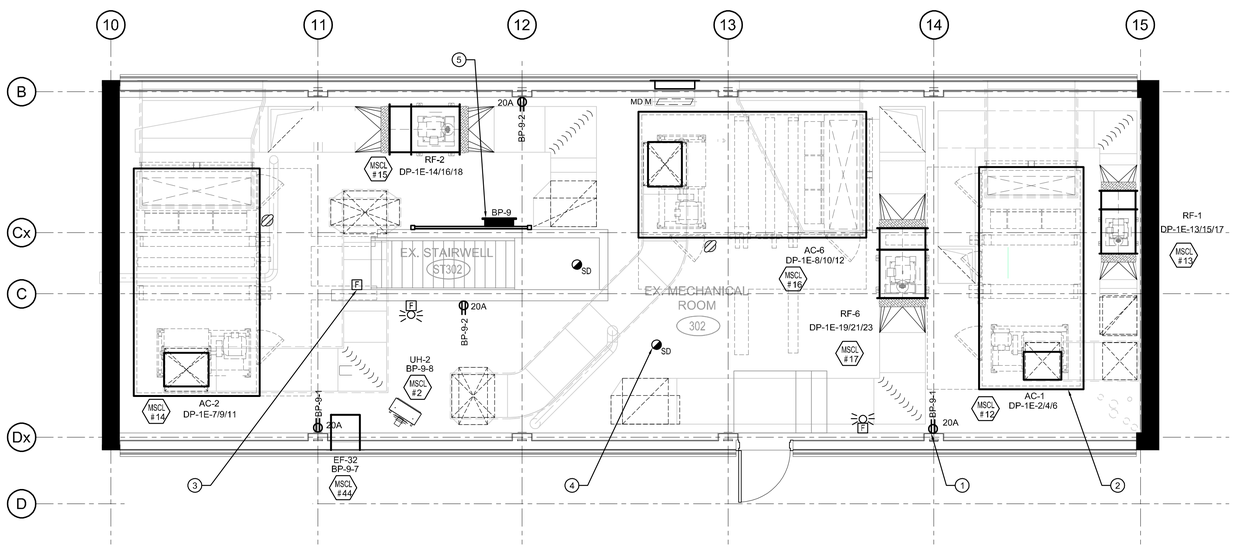

2 E26 POWER AND FIRE ALARM LAYOUT

0 1 2 3 4m

GENERAL NOTES

A. CAREFULLY COORDINATE ALL ELECTRICAL WORK WITH ALL OTHER TRADES ON SITE TO ENSURE NO CONFLICTS OR INTERFERENCES OCCUR.

B. PROVIDE ALL FASTENERS, FITTINGS, JUNCTION, OUTLET, BACKBOXES, CONDUIT, WIRING AND HARDWARE REQUIRED TO ENSURE A COMPLETE AND OPERATIONAL SYSTEM. REFER TO SPECIFICATIONS.

C. WHERE CONDUIT SYSTEMS CROSS BUILDING EXPANSION JOINTS PROVIDE JUNCTION BOXES ON EITHER SIDE OF JOINT C/W METAL FLEX CONDUIT & WIRING SYSTEM TO BRIDGE JOINT AND ALLOW FOR BUILDING MOVEMENT. REFER TO DETAILS ON DRAWINGS AND / OR SPECIFICATIONS.

D. ALL JUNCTION BOX CONDUIT AND WIRING SYSTEMS ARE TO BE CONCEALED IN PARTITIONS WALL FLOOR SLABS AND CEILING SPACES UNLESS NOTED OTHERWISE.

E. PROVIDE CHANNEL SUPPORT HANGERS, MIN. 19mm THREADED ROD TRAPEZE HANGER ASSEMBLIES FOR MOUNTING ALL JUNCTION BOX CONDUIT, RACEWAY SYSTEMS. SUPPORT SYSTEM HANGERS TO BE SPACED AT NOT MORE THAT 2400mm APART UNLESS NOTED OTHERWISE. REFER TO SPECIFICATIONS.

F. ALL ELECTRICAL RACEWAY / SUPPORT SYSTEMS TO BE SECURED TO MEET SEISMIC REQUIREMENTS.

G. COORDINATE EXACT LOCATION OF OUTLETS/DEVICES WITH ARCHITECTURAL DRAWINGS, MILLWORK DETAILS FANCOM DRAWINGS AND EQUIPMENT REQUIREMENTS.

H. MOUNTING HEIGHT OF OUTLETS, DEVICES, SWITCHES, CONTROLS IS FROM FINISHED FLOOR TO CENTER-LINE OF EQUIPMENT UNLESS NOTED OTHERWISE. REFER TO ELECTRICAL SPECIFICATION.

I. COORDINATE ON SITE: DRILL / CUT OPENINGS IN EXISTING PARTITION WALLS, FLOOR SLAB TO FACILITATE INSTALLATION OF ELECTRICAL SYSTEMS. PATCH, REPAIR AND REPAINT ALL OPENINGS TO MATCH EXISTING AND/OR NEW FINISH REQUIREMENTS.

J. SEAL ALL THROUGH WALL, FLOOR SLAB PENETRATIONS WITH APPROVED FIRE STOP SEALANT.

K. PROVIDE LAMACOID NAMEPLATE AND P-TOUCH CIRCUIT IDENTIFICATION ON EQUIPMENT, COVER PLATES, JUNCTION BOXES. REFER TO SPECIFICATION FOR ADDITIONAL INFORMATION.

L. THE WORD "PROVIDE" USED ON THESE DRAWINGS, MEAN THE CONTRACTOR IS RESPONSIBLE TO SUPPLY, INSTALL, WIRE, CONNECT, CONTROL SETUP, TEST, AND COMMISSION EQUIPMENT, DEVICES, AND/OR LUMINAIRES.

M. ALL ELECTRICAL EQUIPMENT, DEVICE OUTLET BOXES TO BE INSTALLED IN SEPARATE STUD SPACES (SEPARATED BY A STUD) AND PREFERABLY ISOLATED BY MIN. 600mm APART WHERE POSSIBLE FOR WALL ERATED STC 45 OR HIGHER. REFER TO DETAIL 3/E20 ON DRAWINGS.

N. EXPOSED ELECTRICAL BOXES IN WALLS RATED STC 50 AND HIGHER TO BE SEALED

O. REFER TO MOTOR START AND CONTROL LIST ON DRAWING E31 FOR MECHANICAL EQUIPMENT DETAILS.

P. REFER TO FIRE ALARM RISER ON DRAWING E32 FOR FIRE ALARM DETAILS.

Q. REFER TO LUMINAIRE SCHEDULE FOR LIGHTING FIXTURE TYPE AND MOUNTING.

R. GANG ALL LIGHT SWITCHES TOGETHER WHERE POSSIBLE UNDER ONE (1) COMMON COVER PLATE UNLESS NOTED OTHERWISE.

S. COORDINATE MOUNTING AND INSTALLATION OF EXTERIOR / OUTDOOR MOUNTED LUMINAIRES WITH ARCHITECT AND BUILDING OWNER.

T. ALL LUMINAIRES TO BE CHAINED. USE GALVANIZED COIL CHAIN TO SUPPORT LUMINAIRE(S) TO BUILDING STRUCTURE FROM MINIMUM TWO (2) LOCATIONS. CORNER OF EACH TO BE SUPPORTED. POINT ON CHAINS TO BE SECURED. INSTALLATION TO MEET SEISMIC REQUIREMENTS.

U. ALL LIGHTING FIXTURES NORMAL / EMERGENCY, EXIT LIGHTING TO BE CONNECTED AND SWITCHED AS INDICATED VIA A JUNCTION BOX, CONDUIT AND WIRING SYSTEM AS SPECIFIED.

V. PROVIDE ALL LIGHTING CONTROL WIRING, LINE VOLTAGE (120V), LOW VOLTAGE LIGHTING CIRCUIT, AND CONTROL WIRING VIA CEILING SPACE MOUNTED JUNCTION BOX, CONDUIT AND WIRING SYSTEM TO END DEVICE(S). SENSORS AND / OR MANUAL SWITCHES MAY BE EITHER INDIVIDUALLY WIRED OR WIRED IN TANDEM AS PER LIGHTING CONTROL SCHEDULES. REFER TO LIGHTING CONTROL SCHEDULE AND CONTROL SCHEMATIC DETAILS ON DRAWING E15, E16, E17, E18 AND E30

W. LIGHTING CIRCUIT SWITCHING AS FOLLOWS:
- CIRCUIT (CKT.) AS INDICATED EI "B2-6-2,1" DENOTES: NORMAL POWER PANEL B2-6, CKT. 2, RELAY OR DEVICE SWITCHING POINT 1
- CIRCUIT (CKT.) AS INDICATED EI: "B2-6-4,1,1" DENOTES: NORMAL POWER PANEL B2-6, CKT. 4, LIGHTING CONTROL RELAY 1, DEVICE SWITCHING POINT 1.
- CIRCUIT (CKT.) AS INDICATED "B1-1X-36" DENOTES: EMERGENCY POWER PANEL B1-1X, CKT. 36 (NON-MANUAL SWITCHED CIRCUIT AND/OR UN-SWITCHED CIRCUIT TO LUMINAIRE WITH BUILT-IN ON/OFF/DIMMING CONTROL).
- CIRCUIT (CKT.) AS INDICATED EI: "B1-1X-37,1 & (2,1,1)" DENOTES: EMERGENCY POWER PANEL B1-1X, CKT. 37, LIGHTING CONTROL RELAY 1, & (2,1,1) DENOTES LUMINAIRE TO BE PROGRAM CONTROLLED TO OPERATE ON / OFF / DIMMING WITH OTHER LOCAL LIGHTING CIRCUIT IN SAME ROOM AS PER LIGHTING CONTROL SCHEMATIC DETAILS.
- NOTE: INTERIOR DEVICE SWITCHING POINT ARE TO BE MADE VIA, LINE VOLTAGE SWITCHES, OCCUPANCY AND/OR VACANCY SENSORS WHERE INDICATED. LOCAL PROGRAMMABLE LIGHTING ROOM CONTROLLERS WITH BUILT-IN RELAYS CONTROLLED VIA LOW VOLTAGE SWITCHES, OCCUPANCY AND/OR VACANCY SENSORS WHERE INDICATED. EXTERIOR DEVICE SWITCHING POINTS TO BE MADE VIA PROGRAMMABLE DIGITAL TIME CLOCK(S).

DRAWING NOTES

1. PROVIDE NEW 120V DUPLEX RECEPTACLE c/w OUTLET BOX AND COVER PLATE AS INDICATED.
2. PROVIDE HARDWIRED CONNECTION TO MECHANICAL EQUIPMENT. CIRCUIT AS INDICATED. REFER TO DRAWING E31 FOR DETAILS. (TYPICAL)
3. PROVIDE NEW FIRE ALARM PULL STATION TIED BACK TO EXISTING ADDRESSABLE FIRE ALARM SYSTEM. PULL STATION TO BE MOUNTED ON UNISTRUT FRAME TO REACH SPECIFIED MOUNTING HEIGHT. REFER TO E32 FOR DETAILS.
4. PROVIDE NEW CEILING MOUNTED SMOKE DETECTOR TIED BACK TO EXISTING FIRE ALARM SYSTEM. REFER TO E32 FOR DETAILS. (TYPICAL)
5. PROVIDE NEW SURFACE MOUNTED ELECTRICAL PANEL AS INDICATED. PROVIDE UNISTRUT FRAME, c/w CROSS BRACING, FASTENED TO FLOOR AND CEILING OF PENTHOUSE. PROVIDE 2000mm WIDE x 2440mm TALL FIRE RATED PLYWOOD BACKBOARD MOUNTED ON UNISTRUT FRAME. PANEL TO BE INSTALLED ON PLYWOOD BACKBOARD. COORDINATE WITH DIVISION 25 AND ALLOW SPACE FOR BUILDING AUTOMATION SYSTEM CONTROL PANEL.
6. PROVIDE LUMINAIRE TYPE AS INDICATED, MOUNT SUSPENDED AT APPROX 2400mm A.F.F. FROM EXPOSED BUILDING STRUCTURE (OWSJ) C/W AC90 WIRING FROM JB SYSTEM TO LUMINAIRE. COORDINATE EXACT LOCATION AND HEIGHT WITH INSTALLATION OF ALL OTHER BUILDING SYSTEMS. PROVIDE STEEL SUPPORT CHANNEL AND TRAPEZE HANGER ASSEMBLIES SECURED TO BUILDING STRUCTURE FOR MOUNTING. (TYPICAL).
7. PROVIDE LIGHTING CONTROL SWITCH TYPE AS INDICATED, FLUSH WALL MOUNTED AT 1100mm A.F.F. AT BOTTOM OF STAIRS (LEVEL 2) C/W CONCEALED RECESSED OUTLET BOX, CONDUIT & WIRING SYSTEMS. LIGHTING CIRCUIT AS INDICATED. (TYPICAL)
8. PROVIDE LIGHTING CONTROL SWITCH TYPE AS INDICATED, SURFACE MOUNTED AT 1100mm A.F.F. PROVIDE FLOOR TO CEILING STEEL CHANNEL SUPPORT FRAME ANCHORED TO BOTH FLOOR SLAB AND UNDERSIDE OF ROOF STRUCTURE (OWSJ) FOR MOUNTING, C/W FS TYPE OUTLET BOX, CONDUIT & WIRING SYSTEMS. LIGHTING CIRCUITS AS INDICATED. (TYPICAL)
9. PROVIDE EMERGENCY BATTERY UNIT (TWO (2) INTEGRAL 6W LED HEADS 120-12V, TEST SWITCH, AC & DC TERMINAL BLOCKS AND PLUG-IN CORD SET LUMACELL RGS SERIES WITH MIN. 90 MINUTES OF WATTAGE CAPACITY. PROVIDE DUPLEX RECEPTACLE BESIDE EBU CIRCUIT AS INDICATED. (TYPICAL)
10. PROVIDE EMERGENCY REMOTE MOUNTED INTEGRAL HEADS WITH CANOPY, TO BE CONDUIT STEM MOUNTED AT APPROX 2400mm A.F.F. C/W JUNCTION BOX CONDUIT AND WIRING SYSTEM. EBU CIRCUIT AS INDICATED. (TYPICAL)
11. PROVIDE NEW EXIT SIGN TO BE CONDUIT STEM MOUNTED AT APPROX 2250mm A.F.F. C/W JUNCTION BOX CONDUIT AND WIRING SYSTEM. ROUTE NEW CONDUIT AND WIRING THROUGH MULLION FRAME TO SIGN. COORDINATE EXACT LOCATION ON SITE. REFER TO ARCHITECTURAL DRAWINGS FOR ADDITIONAL INFORMATION FOR GLAZING WALL.

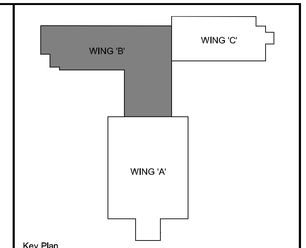

Key Plan

DO NOT SCALE DRAWINGS:

Contractors must check and verify all site conditions. Notify the Owner's Representative in writing before proceeding with the work if discrepancies are evident between the drawings and the site condition. No extras to the contract will be allowed if discrepancies were evident prior to start of work.

UNEXPECTED DISCOVERY OF ASBESTOS:

Where a friable material is discovered during construction, renovations and/or demolition, and it is suspected to contain asbestos, the Contractor must stop all work that may disturb the material. The Contractor shall advise the Owner of the discovery and await instructions from the owner.

A = Detail number

B = Drawing number where detailed

NO.	ISSUED	BY	DATE
1	ISSUED FOR CONVENIENCE	TA	APR 12, 2019
0	ISSUED FOR PERMIT & TENDER	TA	NOV 2, 2018

Orientation

Seal

Seal

UNIVERSITY of GUELPH

Design, Engineering & Construction
Physical Resources
Guelph, Ontario. N1G 2W1

Consultant

www.jlrichards.ca

J.L.Richards
ENGINEERS · ARCHITECTS · PLANNERS

Project
BUILDING #046
RENOVATIONS

Drawing Title
ELECTRICAL
ELECTRICAL LAYOUT WING B MECHANICAL PENTHOUSE

Project No.
504034

Location
UNIVERSITY OF GUELPH
BUILDING #46

Scale: AS INDICATED	Date: APR 12, 2019
Drawn by: AM	Drawing No. E26
Checked By: HM	
Approved By: HM	
JLR #: 27915	

Cad File No. ----

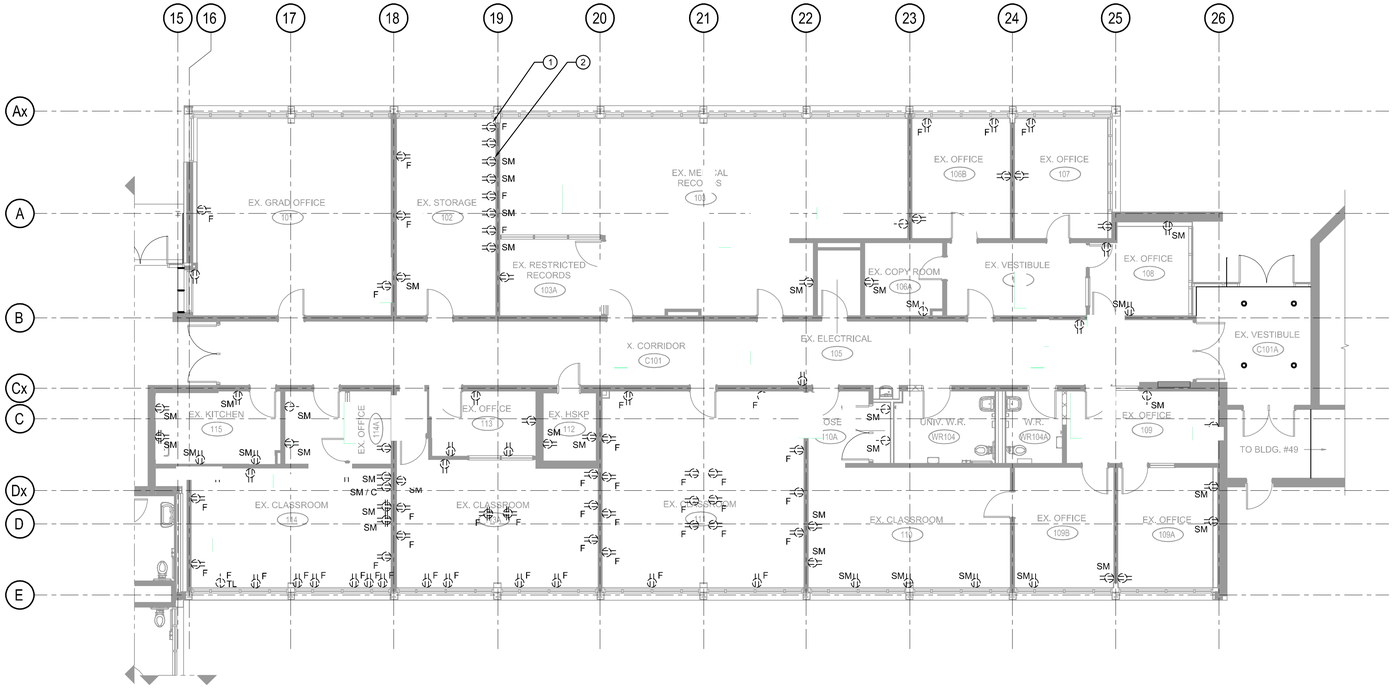

1 POWER DEMOLITION LAYOUT WING C
E27

CONTRACTOR TO COORDINATE ON SITE EXACT LOCATIONS WITH BUILDING OWNER, BUILDING OWNERS FURNITURE SYSTEM LAYOUTS AND ALL MILLWORK PRIOR TO START OF WORK AND INSTALLATION OF ANY POWER AND/OR TELECOM DATA OUTLETS IN ALL ROOMS.

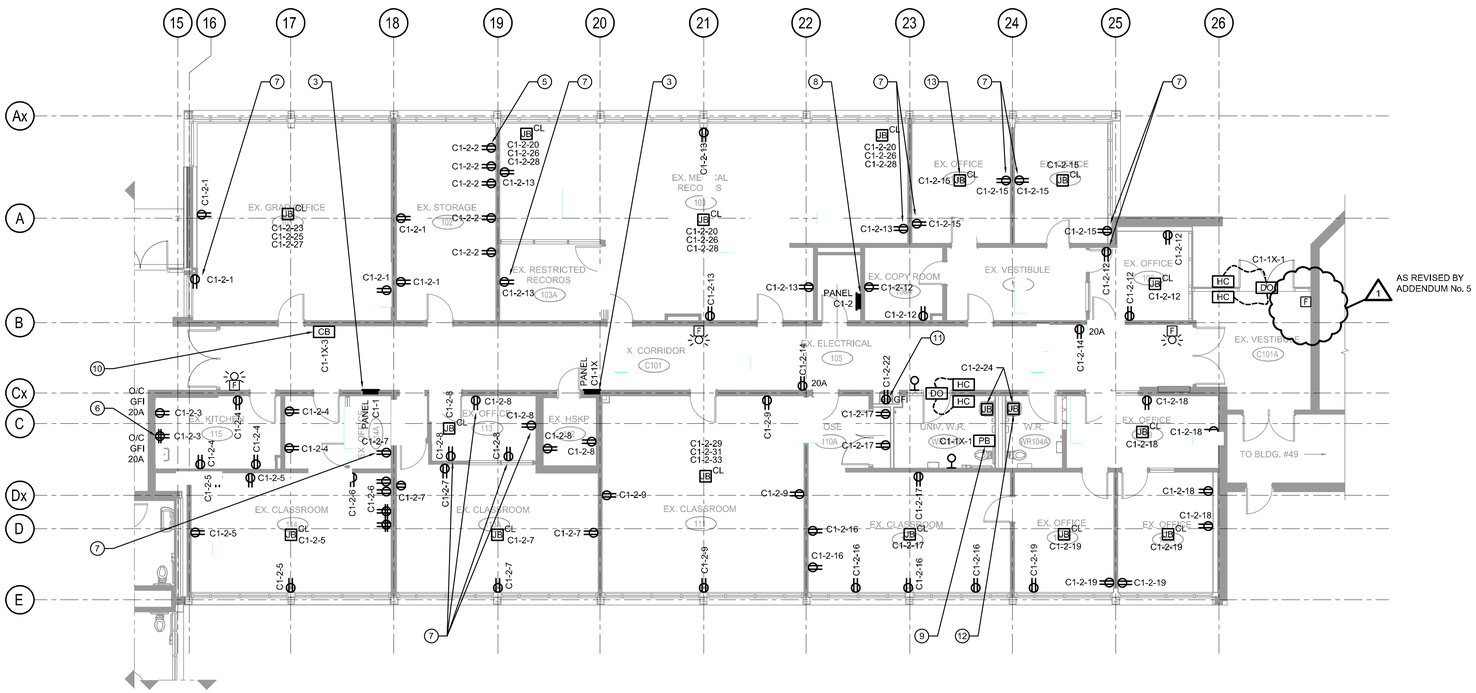

2 NEW POWER LAYOUT WING C
E27

CONTRACTOR TO COORDINATE ON SITE EXACT LOCATIONS WITH BUILDING OWNER, BUILDING OWNERS FURNITURE SYSTEM LAYOUTS AND ALL MILLWORK PRIOR TO START OF WORK AND INSTALLATION OF ANY POWER AND/OR TELECOM DATA OUTLETS IN ALL ROOMS.

GENERAL NOTES

A. ALL EXISTING RECEPTACLES MAY NOT BE CAPTURED DUE TO EXISTING FURNITURE IN THE SPACE.

DRAWING NOTES

1. DEMOLISH ALL FURNITURE MOUNTED RECEPTACLES BACK TO SOURCE. REFER TO DRAWING DE12. (TYPICAL)
2. ALL SURFACE MOUNTED RECEPTACLES TO BE REMOVED AND REPLACED. DEMOLISH EXISTING CONDUIT AND REMOVE WIRING BACK TO SOURCE. REFEED RECPETACLES WITH ALL NEW CONDUIT AND WIRING. NEW RECEPTACLES TO BE INSTALLED IN ROOM PERIMETER WIREMOLD. REFER TO DE12. (TYPICAL)
3. NEW ELECTRICAL PANEL TO BE INSTALLED RECESSED IN WALL WHERE LOCATION / CUT OUT OF PREVIOUSLY DEMOLISHED PANEL EXISTS. EXTEND / PATCH EXISTING WALL CUT OUT AS NECESSARY TO ACCOMMODATE NEW PANEL DIMENSIONS AND NEW CONDUIT RUNS IN WALL TO CEILING SPACE. REFER TO ARCHITECTURAL DRAWINGS FOR FURTHER INFORMATION.
4. REPLACE EXISTING FIRE ALARM BELLS WITH BELL STROBES TO BE TIED IN TO EXISTING MAIN FIRE ALARM CONTROL PANEL IN WING B MAIN ELECTRICAL ROOM. (TYPICAL)
5. PROVIDE NEW WIREMOLD AL3300 SERIES RACEWAY c/w ALL HARDWARE AND FACEPLATES. SURFACE MOUNTED ON WALL. INSTALL RACEWAY SO THAT RECEPTACLES WITHIN RACEWAY ARE LOCATED 400mm ABOVE FINISHED FLOOR. PROVIDE 120V RECEPTACLES AS INDICATED WITHIN RACEWAY c/w ASSOCIATED COVER PLATES. REFER TO FANCOM DRAWINGS FOR ADDITIONAL DEVICES WITHIN RACEWAY.
6. PROVIDE 120V RECEPTACLES AS INDICATED. OVER COUNTER RECEPTACLES INSTALLED IN KITCHEN TO BE SURFACE MOUNTED c/w BACKBOX, CONDUIT, AND WIRING. (TYPICAL)
7. PROVIDE NEW 120V DUPLEX RECEPTACLE RECESSED IN WALL. REUSE EXISTING LOCATION / CUTOUT. PROVIDE ALL NEW BACKBOXES, CONDUIT AND WIRING AS NEEDED.
8. NEW PANEL TO BE INSTALLED SURFACE WALL MOUNTED IN SAME LOCATION AS PREVIOUSLY DEMOLISHED PANEL.
9. PROVIDE CONDUITS AND PULL STRINGS FOR EMERGENCY CALL SYSTEM / DOOR OPERATOR c/w PUSH BUTTONS, 2 x REMOTE ANNUNCIATORS, AND LOW VOLTAGE TRANSFORMER. REFER TO ARCHITECTURAL DRAWINGS FOR EXACT MOUNTING HEIGHT AND LOCATION OF PUSH BUTTONS. CALL SYSTEM TO BE INTEGRATED WITH DOOR OPERATOR. REFER TO HARDWARE SPECIFICATIONS. REFER TO 3/E30 FOR DETAILS. (TYPICAL)
10. A6.36 PROVIDE 120VAC / 24VAC TRANSFORMER MOUNTED IN JUNCTION BOX, SIZED TO SUIT, IN CEILING SPACE FOR CODE BLUE EMERGENCY CALL STATION. PROVIDE CONDUIT AND WIRING FROM TRANSFORMER TO CODE BLUE BOX. REFER TO FANCOM DRAWINGS FOR COMMUNICATIONS REQUIREMENTS. CONTRACTOR TO PROVIDE MODEL CODE BLUE CB-4-S SIGNATURE CALL BOX WITH HARDWIRE POWER CONNECTION. (TYPICAL)
11. PROVIDE 120V GFCI DUPLEX RECEPTACLE FOR WATER FOUNTAIN. COORDINATE WITH SHOP DRAWING AND ARCHITECTURAL DRAWINGS FOR EXACT LOCATION AND MOUNTING HEIGHT FOR POINT OF CONNECTION. (TYPICAL)
12. PROVIDE 120V, 15A CIRCUIT TERMINATED IN JUNCTION BOX FOR AUTOMATIC SINKS. LOW VOLTAGE TRANSFORMER TO BE SUPPLIED BY MECHANICAL CONTRACTOR. COORDINATE WITH MECHANICAL CONTRACTOR FOR EXACT LOCATION OF JUNCTION BOX / CIRCUIT. (TYPICAL OF 2)
13. PROVIDE JUNCTION BOX, SIZED TO SUIT, INSTALLED IN CEILING SPACE. TERMINATE INDICATED CIRCUITS IN CEILING JUNCTION BOX AND MAKE SAFE FOR FUTURE USE. (TYPICAL)

LINETYPE LEGEND	
NEW	————
TO BE DEMOLISHED	- - - - - - - -

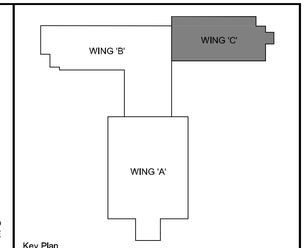

Key Plan

DO NOT SCALE DRAWINGS:

Contractors must check and verify all site conditions. Notify the Owner's Representative in writing before proceeding with the work if discrepancies are evident between the drawings and the site condition. No extras to the contract will be allowed if discrepancies were evident prior to start of work.

UNEXPECTED DISCOVERY OF ASBESTOS:

Where a friable material is discovered during construction, renovations and/or demolition, and it is suspected to contain asbestos, the Contractor must stop all work that may disturb the material. The Contractor shall advise the Owner of the discovery and await instructions from the owner.

A = Detail number
B = Drawing number where detailed

NO.	ISSUED	BY	DATE
3	ISSUED FOR CONVENIENCE	TA	APR 12, 2019
2	POST-TENDER ADDENDUM N0.1	TA	FEB 26, 2019
1	REISSUED FOR PERMIT AND ADDENDUM 5	TA	DEC 7, 2018
0	ISSUED FOR PERMIT & TENDER	TA	NOV 2, 2018

Orientation

Seal

Seal

UNIVERSITY of GUELPH
Design, Engineering & Construction
Physical Resources
Guelph, Ontario. N1G 2W1

Consultant
www.jlrichards.ca
J.L.Richards
ENGINEERS · ARCHITECTS · PLANNERS

Project
BUILDING #046
RENOVATIONS

Drawing Title
POWER AND FIRE ALARM LAYOUT WING C

Project No.
504034

Location
UNIVERSITY OF GUELPH
BUILDING #46

Scale: AS INDICATED	Date: APR 12, 2019
Drawn by: SO	Drawing No.
Checked By: HM	E27
Approved By: HM	
JLR #: 27915	

Cad File No. ----

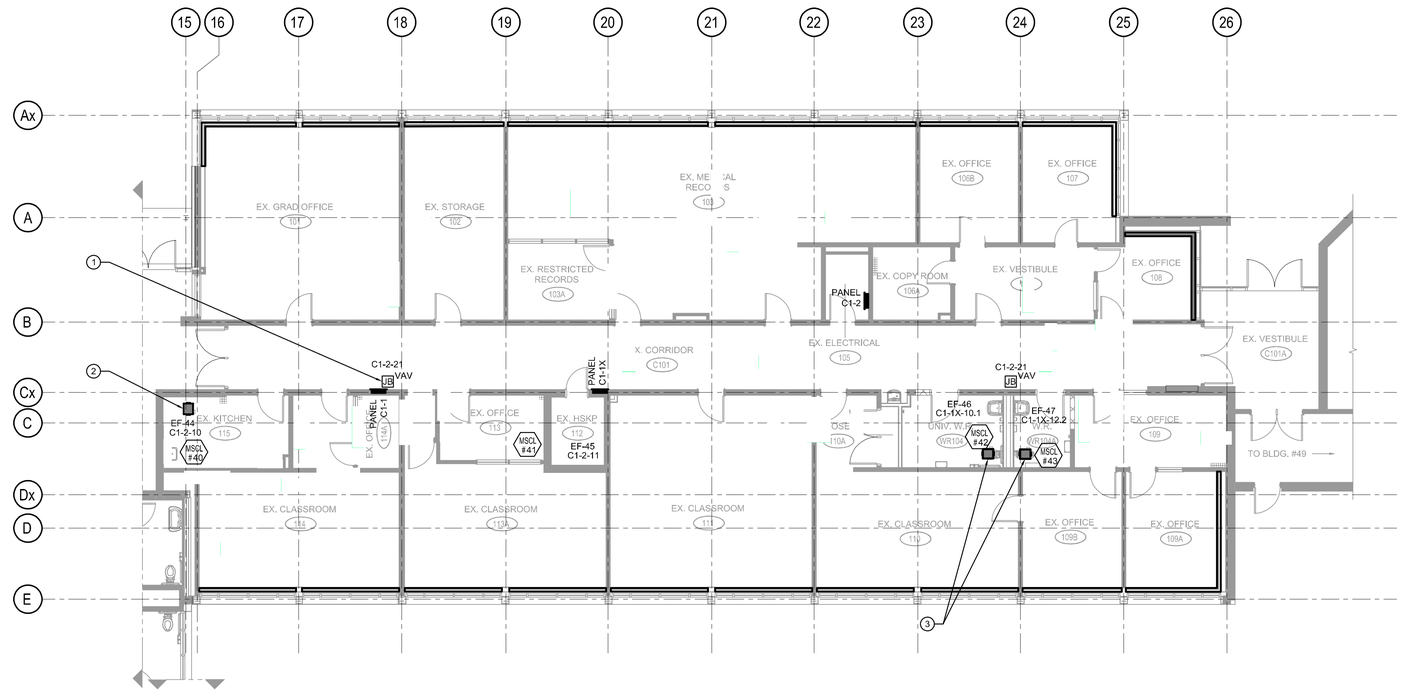

1 MECHANICAL EQUIPMENT WING C
E28

0 1 2 4 6 8m

GENERAL NOTES:

A. COORDINATE WIRING TO MECHANICAL EQUIPMENT AS PER MOTOR STARTER AND CONTROL LIST REQUIREMENTS ON DRAWING E31.

B. COORDINATE WITH MECHANICAL EQUIPMENT PROVIDER TO TEST AND COMMISSION EQUIPMENT.

DRAWING NOTES

1. PROVIDE DEDICATED 120V CIRCUIT INSTALLED IN CEILING MOUNTED JUNCTION BOX FOR POWER TO MECHANICAL VAV BOXES. CIRCUIT AS INDICATED. MECHANICAL CONTRACTOR TO SUPPLY TRANSFORMER AND LOW VOLTAGE WIRING. COORDINATE EXACT LOCATION ON SITE WITH MECHANICAL CONTRACTOR. (TYPICAL OF 2)
2. PROVIDE HARDWIRED CONNECTION TO MECHANICAL EQUIPMENT. CIRCUIT AS INDICATED. REFER TO DRAWING E31 FOR DETAILS. (TYPICAL)
3. WASHROOM EXHAUST FANS TO BE TIED INTO LIGHTING OCCUPANCY SENSOR CIRCUIT. REFER TO LIGHTING CONTROL SCHEMATICS. (TYPICAL OF 2)

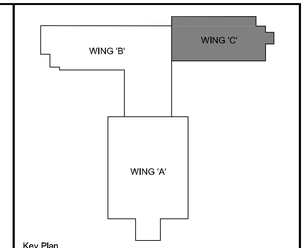

Key Plan

DO NOT SCALE DRAWINGS:

Contractors must check and verify all site conditions. Notify the Owner's Representative in writing before proceeding with the work if discrepancies are evident between the drawings and the site condition. No extras to the contract will be allowed if discrepancies were evident prior to start of work.

UNEXPECTED DISCOVERY OF ASBESTOS:

Where a friable material is discovered during construction, renovations and/or demolition, and it is suspected to contain asbestos, the Contractor must stop all work that may disturb the material. The Contractor shall advise the Owner of the discovery and await instructions from the owner.

A = Detail number
B = Drawing number where detailed

NO.	ISSUED	BY	DATE
1	ISSUED FOR CONVENIENCE	TA	APR 12, 2019
0	ISSUED FOR PERMIT & TENDER	TA	NOV 2, 2018

Orientation

Seal

Seal

UNIVERSITY of GUELPH
Design, Engineering & Construction
Physical Resources
Guelph, Ontario. N1G 2W1

Consultant
www.jlrichards.ca
J.L.Richards
ENGINEERS · ARCHITECTS · PLANNERS

Project
BUILDING #046
RENOVATIONS

Drawing Title
MECHANICAL EQUIPMENT
WING C

Project No.
504034

Location
UNIVERSITY OF GUELPH
BUILDING #46

Scale: AS INDICATED
Date: APR 12, 2019
Drawn by: SO
Checked By: HM
Approved By: HM
JLR #: 27915
Drawing No.: E28

Cad File No. ----

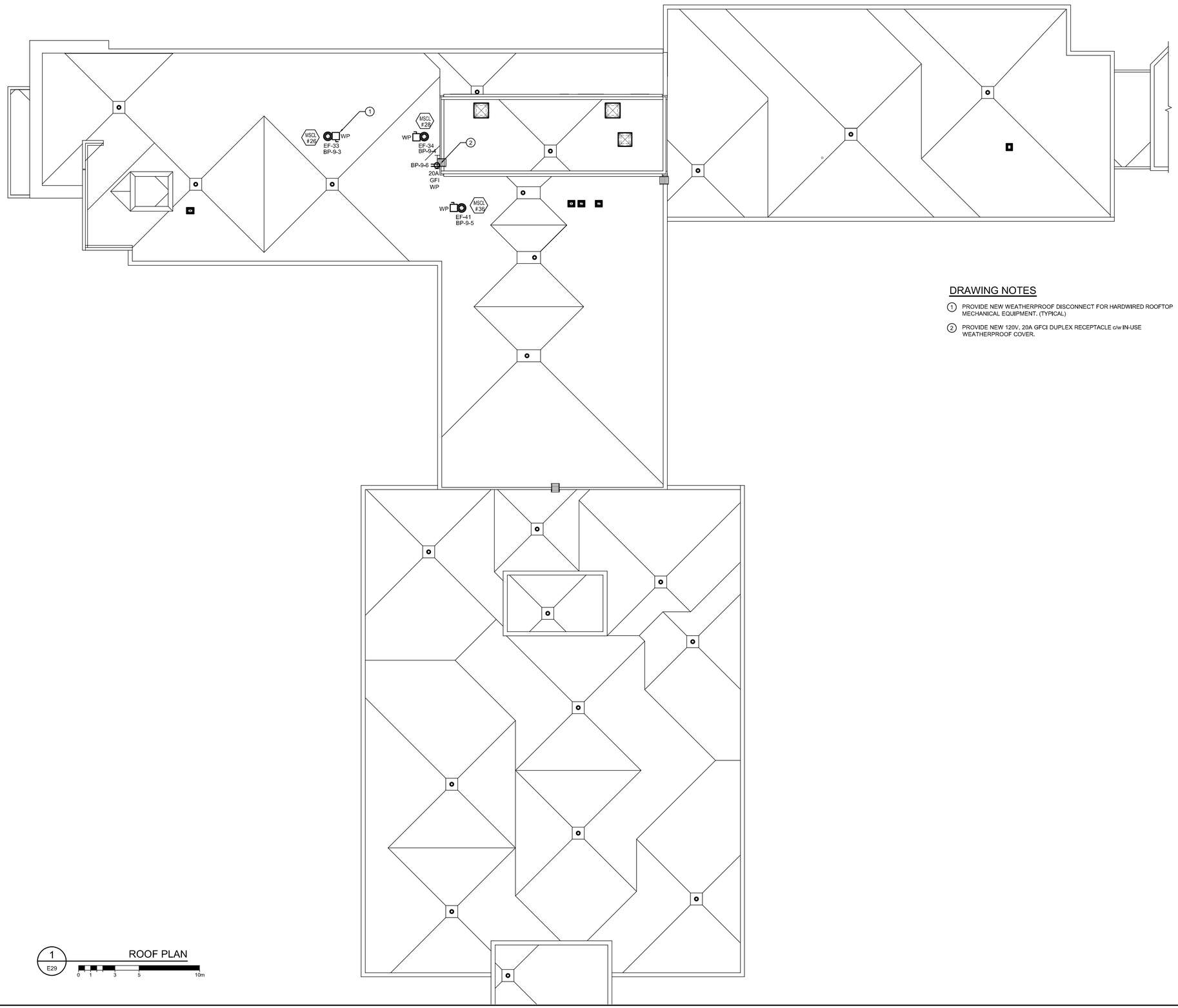

DRAWING NOTES

1. PROVIDE NEW WEATHERPROOF DISCONNECT FOR HARDWIRED ROOFTOP MECHANICAL EQUIPMENT. (TYPICAL)
2. PROVIDE NEW 120V, 20A GFCI DUPLEX RECEPTACLE c/w IN-USE WEATHERPROOF COVER.

1 / E29 ROOF PLAN

0 1 3 5 10m

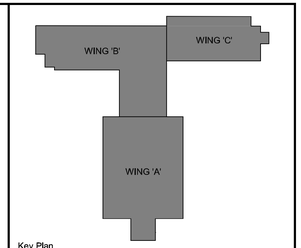

Key Plan

DO NOT SCALE DRAWINGS:

Contractors must check and verify all site conditions. Notify the Owner's Representative in writing before proceeding with the work if discrepancies are evident between the drawings and the site condition. No extras to the contract will be allowed if discrepancies were evident prior to start of work.

UNEXPECTED DISCOVERY OF ASBESTOS:

Where a friable material is discovered during construction, renovations and/or demolition, and it is suspected to contain asbestos, the Contractor must stop all work that may disturb the material. The Contractor shall advise the Owner of the discovery and await instructions from the owner.

A / B — A = Detail number; B = Drawing number where detailed

NO.	ISSUED	BY	DATE
1	ISSUED FOR CONVENIENCE	TA	APR 12, 2019
0	ISSUED FOR PERMIT & TENDER	TA	NOV 2, 2018

Orientation

N

Seal

Seal

UNIVERSITY of GUELPH
Design, Engineering & Construction
Physical Resources
Guelph, Ontario. N1G 2W1

Consultant
www.jlrichards.ca
J.L.Richards
ENGINEERS · ARCHITECTS · PLANNERS

Project
BUILDING #046
RENOVATIONS

Drawing Title
ELECTRICAL
ROOF LAYOUT

Project No.
504034

Location
UNIVERSITY OF GUELPH
BUILDING #46

Scale: AS INDICATED	Date: APR 12, 2019
Drawn by: SO	Drawing No.
Checked By: HM	E29
Approved By: HM	
JLR #: 27915	

Cad File No. ----

LIGHTING CONTROLS AND EQUIPMENT SCHEDULE WING B & C - LEVEL 1

ROOM NUMBER / DESCRIPTION	BUILDING	WALL MOUNTED CONTROL SWITCHES: LINE VOLTAGE WALL SWITCH(S) (MANUAL ON / MANUAL OFF) (P, 3-WAY, 4-WAY AS INDICATED) QTY.	DEVICE	LINE VOLTAGE WALL SWITCH (MANUAL ON / VACANCY OFF) WITH PIR (ULTRASONIC SENSOR QTY.	DEVICE	LINE VOLTAGE WALL SWITCH (MANUAL ON / VACANCY OFF) WITH PIR (ULTRASONIC SENSOR QTY.	DEVICE	LC1 TO LC5: LOW VOLTAGE SWITCH (MANUAL ON / OFF + DIMMING) QTY.	DEVICE	~~LOW VOLTAGE SWITCH (MANUAL ON / OFF + DIMMING) (TO BE WIRE SHARE DIMMING)~~ QTY.	DEVICE	SC1: LOW VOLTAGE SWITCH (WMANUAL ON / OFF + DIMMING 4 SCENE CONTROLLER) QTY.	DEVICE	CEILING / WALL MOUNTED CONTROL SENSORS: LINE VOLTAGE OCCUPANCY SENSOR, CEILING MOUNT AUTO ON / AUTO OFF (P,I,R, / ULTRASONIC) QTY.	DEVICE	LOW VOLTAGE VACANCY SENSOR, WALL MOUNT (P,I,R, / ULTRASONIC) QTY.	DEVICE	LOW VOLTAGE OCCUPANCY SENSOR, WALL MOUNT (P,I,R, / ULTRASONIC) QTY.	DEVICE	LOW VOLTAGE VACANCY SENSOR, CEILING MOUNT (P,I,R, / ULTRASONIC) QTY.	DEVICE	LOW VOLTAGE OCCUPANCY SENSOR, CEILING MOUNT (P,I,R, / ULTRASONIC) QTY.	DEVICE	DIGITAL MANAGEMENT PROGRAMMABLE ROOM CONTROLLER LMRC SERIES QTY.	DEVICE	EMERGENCY LIGHTING CONTROL UNIT CONTROLLER ELCU SERIES QTY.	DEVICE	LIGHTING CONTROL SCHEMATIC (REFER TO DRAWING E15, 16, 17, 18.)	NOTES
EXISTING VESTIBULE (C101A)	WING C																					1	●	1	●	1	●			P	
EXISTING CORRIDOR (C101)	WING C																					5	●	1	●	1	●			P	
EXISTING GRADUATE OFFICE (101)	WING C							2	●									1	●					1	●	1	●			J	LIGHTING NEAREST EXTERIOR WALL TO BE SEPARATELY CONTROLLED
EXISTING STORAGE (102)	WING C							2	●									1	●					1	●	1	●			J	LIGHTING NEAREST EXTERIOR WALL TO BE SEPARATELY CONTROLLED
EXISTING MEDICAL RECORDS (103)	WING C							4	●									3	●					1	●	1	●			N	LIGHTING NEAREST EXTERIOR WALL TO BE SEPARATELY CONTROLLED
EXISTING RESTRICTED RECORDS (103A)	WING C							1	●							1	●							1	●					M	
EXISTING ELECTRICAL ROOM (105)	WING C			1	●																									Y	
EXISTING VESTIBULE (106)	WING C							1	●							1	●							1	●	1	●			L	
EXISTING COPY ROOM (106A)	WING C					1	●																							X	
EXISTING OFFICE (106B)	WING C							2	●							1	●							1	●					K	LIGHTING NEAREST EXTERIOR WALL TO BE SEPARATELY CONTROLLED
EXISTING OFFICE (107)	WING C							2	●							1	●							1	●					K	LIGHTING NEAREST EXTERIOR WALL TO BE SEPARATELY CONTROLLED
EXISTING OFFICE (108)	WING C							1	●							1	●							1	●					M	
EXISTING OFFICE (109)	WING C								●							1	●							1	●	1	●			L	
EXISTING OFFICE (109A)	WING C							2	●							1	●							1	●					K	LIGHTING NEAREST EXTERIOR WALL TO BE SEPARATELY CONTROLLED
EXISTING OFFICE (109B)	WING C							2	●							1	●							1	●					K	LIGHTING NEAREST EXTERIOR WALL TO BE SEPARATELY CONTROLLED
WASHROOM (WR104)	WING C											1	●																	W	WASHROOM EXHAUST FAN TO BE CONTROLLED ON / OFF WITH LIGHTING
UNIVERSAL WASHROOM (WR104A)	WING C											1	●																	W	WASHROOM EXHAUST FAN TO BE CONTROLLED ON / OFF WITH LIGHTING
EXISTING CLASSROOM (110)	WING C							2	●							1	●							1	●	1	●			J	LIGHTING NEAREST EXTERIOR WALL TO BE SEPARATELY CONTROLLED
CLOSET (110A)	WING C																														NO LIGHTING IN CLOSET
EXISTING CLASSROOM (111)	WING C							2	●							1	●							1	●	1	●			J	LIGHTING NEAREST EXTERIOR WALL TO BE SEPARATELY CONTROLLED
EXISTING HOUSEKEEPING (112)	WING C			1	●																									Y	
EXISTING OFFICE (113)	WING C					1	●																							X	
EXISTING CLASSROOM (113A)	WING C							2	●							1	●							1	●	1	●			J	LIGHTING NEAREST EXTERIOR WALL TO BE SEPARATELY CONTROLLED
EXISTING CLASSROOM (114)	WING C							2	●							1	●							1	●	1	●			J	LIGHTING NEAREST EXTERIOR WALL TO BE SEPARATELY CONTROLLED
EXISTING OFFICE (114A)	WING C					1	●																							X	
EXISTING KITCHEN (115)	WING C					1	●																							X	
CUSTODIAN (116)	WING B			1	●																									Y	
WASHROOM (WR 116)	WING B											8	●																	V	WASHROOM EXHAUST FAN TO BE CONTROLLED ON / OFF WITH LIGHTING
WC MECH CLOSET (WR 116A)	WING B			1	●																									Y	
VESTIBULE (117)	WING B											1	●																		AUTO ON / OFF
SERVER ROOM (117A)	WING B			1	●																									Y	
CCS (117B)	WING B			1	●																									Y	
EXISTING ELECTRICAL ROOM (118)	WING B	1	●																												MANUAL ON / OFF
EXISTING STORAGE (119)	WING B			1	●																									Y	
EXISTING MECHANICAL (120)	WING B	1	●																												MANUAL ON / OFF
EXISTING MAINTENANCE (121)	WING B			1	●																									Y	
RECEPTION (123, 1234A, C123)	WING B							3	●							3	●							1	●	1	●			J	SWITCH TO CONTROL LIGHTING IN ROOMS 123, 123A, AND C123
OFFICE (123B)	WING B					1	●																							X	
STORAGE (123C)	WING B					1	●																							X	
OFFICE (123D)	WING B					1	●																							X	
MEETING (123E)	WING B					1	●																							X	
COFFEE / COPY (123F)	WING B					1	●																							X	
CLOSED FILE STORAGE (124)	WING B							1	●									1	●					1	●	1	●			F	
FAMILY THERAPY ROOM (125)	WING B							1	●							1	●							1	●	1	●			F	
VIEWING ROOM (125A)	WING B					1	●																							X	
COUPLE / INDIVIDUAL ROOM (126A)	WING B							1	●							1	●							1	●					A	
COUPLE / INDIVIDUAL ROOM (126B)	WING B							1	●							1	●							1	●					A	
COUPLE / INDIVIDUAL ROOM (126C)	WING B							1	●							1	●							1	●					A	
COUPLE / INDIVIDUAL ROOM (126D)	WING B							1	●							1	●							1	●					A	
FAMILY THERAPY ROOM (127)	WING B							2	●							1	●							1	●	1	●			F	
VIEWING ROOM (127A)	WING B					1	●																							X	
MULTI PURPOSE ROOM (128)	WING B							1	●							1	●							1	●					A	
LARGE GROUP ROOM (129)	WING B																														
SESSIONAL OFFICE (130)	WING B							1	●							1	●							1	●					A	
STORAGE (131)	WING B					1	●																							X	
RESEARCH SPACE (132)	WING B							1	●									1	●					1	●	1	●			F	
OFFICE / SUPERVISION (133)	WING B							1	●							1	●							1	●	1	●			B	
KITCHENETTE (134)	WING B					1	●																							X	
OFFICE / SUPERVISION (135)	WING B							1	●							1	●							1	●	1	●			B	
STUDENT WORK AREA (136)	WING B							1	●									3	●					1	●	1	●			F	
TELEPHONE (136B)	WING B					1	●																							X	
BREAKOUT ROOM (136C)	WING B					1	●																							X	
OFFICE / SUPERVISION (137)	WING B							1	●							1	●							1	●	1	●			B	
UNIVERSAL WASHROOM (WR138)	WING B											1	●																	W	WASHROOM EXHAUST FAN TO BE CONTROLLED ON / OFF WITH LIGHTING
SPRINKLER ROOM (138)	WING B			1	●																									Y	
OFFICE / SUPERVISION (139)	WING B							1	●							1	●							1	●	1	●			B	
STORAGE (141)	WING B					1	●																							X	
WAITING (143)	WING B							1	●											1	●			2	●	1	●			D	WALL MOUNT CONTROL SWITCH TO BE LOCATED IN ROOM 145
RECEPTION / MAIL RM.S (145, 145A)	WING B							1	●													1	●	2	●	1	●			C	
ADMIN OFFICE (147)	WING B							2	●							1	●							1	●					H	
OFFICE / SUPERVISION (149)	WING B							2	●							1	●							1	●	1	●			R	
EXISTING STAIRWELL (ST101)	WING B																														BUILT-IN AUTO ON 100%, VACANCY DIM. 50% WITHIN "F1" LUMINAIRE
ENTRANCE VESTIBULE (ST101A)	WING B																					1	●	1	●	1	●			P	
EXISTING STAIRWELL (ST102, C100)	WING B																			1	●	2	●	2	●	1	●			Q	BUILT-IN AUTO ON 100%, VACANCY DIM. 50% WITHIN "F1" LUMINAIRE
EXISTING STAIRWELL (ST103)	WING B																														BUILT-IN AUTO ON 100%, VACANCY DIM. 50% WITHIN "F1" LUMINAIRE
CORRIDOR (C102)	WING B																			2	●			1	●	1	●			P	AUTO ON 100%, VACANCY DIM. 25% (MIN. 10 LUX / 1FC)
CORRIDOR (C103)	WING B																			2	●			1	●	1	●			P	AUTO ON 100%, VACANCY DIM. 25% (MIN. 10 LUX / 1FC)
CORRIDOR (C104)	WING B																			2	●			1	●	1	●			P	AUTO ON 100%, VACANCY DIM. 25% (MIN. 10 LUX / 1FC)
CORRIDOR (C105)	WING B																					2	●	1	●	1	●			P	AUTO ON 100%, VACANCY DIM. 25% (MIN. 10 LUX / 1FC)
CORRIDOR (C106)	WING B																			2	●			1	●	1	●			P	AUTO ON 100%, VACANCY DIM. 25% (MIN. 10 LUX / 1FC)
CORRIDOR (C107)	WING B																					2	●	1	●	1	●			P	AUTO ON 100%, VACANCY DIM. 25% (MIN. 10 LUX / 1FC)
CORRIDOR (C108)	WING B																			2	●			1	●	1	●			P	AUTO ON 100%, VACANCY DIM. 25% (MIN. 10 LUX / 1FC)
ELEVATOR (EL101)	WING B	2	●																												3-WAY SWITCHES TO CONTROL LIGHTING IN EL101, EL201

LIGHTING CONTROLS AND EQUIPMENT SCHEDULE WING B - LEVEL 2

ROOM NUMBER / DESCRIPTION	BUILDING	WALL MOUNTED CONTROL SWITCHES: LINE VOLTAGE WALL SWITCH(S) (MANUAL ON / MANUAL OFF) (P, 3-WAY, 4-WAY AS INDICATED) QTY.	DEVICE	LINE VOLTAGE WALL SWITCH (MANUAL ON / VACANCY OFF) WITH PIR (ULTRASONIC SENSOR QTY.	DEVICE	LINE VOLTAGE WALL SWITCH (MANUAL ON / VACANCY OFF) WITH PIR (ULTRASONIC SENSOR QTY.	DEVICE	LC1 TO LC5: LOW VOLTAGE SWITCH (MANUAL ON / OFF + DIMMING) QTY.	DEVICE	~~LOW VOLTAGE SWITCH (MANUAL ON / OFF + DIMMING) (TO BE WIRE SHARE DIMMING)~~ QTY.	DEVICE	SC1: LOW VOLTAGE SWITCH (WMANUAL ON / OFF + DIMMING 4 SCENE CONTROLLER) QTY.	DEVICE	CEILING / WALL MOUNTED CONTROL SENSORS: LINE VOLTAGE OCCUPANCY SENSOR, CEILING MOUNT AUTO ON / AUTO OFF (P,I,R, / ULTRASONIC) QTY.	DEVICE	LOW VOLTAGE VACANCY SENSOR, WALL MOUNT (P,I,R, / ULTRASONIC) QTY.	DEVICE	LOW VOLTAGE OCCUPANCY SENSOR, WALL MOUNT (P,I,R, / ULTRASONIC) QTY.	DEVICE	LOW VOLTAGE VACANCY SENSOR, CEILING MOUNT (P,I,R, / ULTRASONIC) QTY.	DEVICE	LOW VOLTAGE OCCUPANCY SENSOR, CEILING MOUNT (P,I,R, / ULTRASONIC) QTY.	DEVICE	DIGITAL MANAGEMENT PROGRAMMABLE ROOM CONTROLLER LMRC SERIES QTY.	DEVICE	EMERGENCY LIGHTING CONTROL UNIT CONTROLLER ELCU SERIES QTY.	DEVICE	LIGHTING CONTROL SCHEMATIC (REFER TO DRAWING E15, 16, 17, 18.)	NOTES
CUSTODIAN (201)	WING B																					1	●								
WASHROOM (WR201)	WING B													8	●															V	EXHAUST FAN TO BE CONTROLLED ON / OFF WITH LIGHTING
WC MECH CLOSET (WR 116A)	WING B			1	●																									Y	
ASSESSMENT ROOM (202)	WING B							1	●							1	●							1	●	1	●			B	
COUPLE/INDIVIDUAL THERAPY ROOM (203)	WING B							1	●							1	●							1	●	1	●			B	
ASSESSMENT ROOM (204)	WING B							1	●							1	●							1	●	1	●			B	
COUPLE/INDIVIDUAL THERAPY ROOM (205)	WING B							1	●							1	●							1	●	1	●			B	
VIEWING ROOM (206)	WING B					1	●																							X	
COUPLE/INDIVIDUAL THERAPY ROOM (207)	WING B							1	●							1	●							1	●	1	●			B	
ASSESSMENT ROOM (208)	WING B							1	●							1	●							1	●	1	●			B	
PLAY ROOM (209)	WING B							1	●							1	●							1	●	1	●			F	
PLAYROOM (210)	WING B							1	●							1	●							1	●	1	●			F	
VIEWING ROOM (210A)	WING B					1	●																							X	
FAMILY THERAPY ROOM (211)	WING B							1	●							1	●							1	●	1	●			F	
TEST LIBRARY (212)	WING B					1	●																							X	
FAMILY THERAPY ROOM (213)	WING B							1	●							2	●							1	●	1	●			F	
VIEWING ROOM (214)	WING B					1	●																							X	
FAMILY THERAPY ROOM (215)	WING B							1	●							2	●							1	●	1	●			F	
WELLNESS ROOM (216)	WING B					1	●																							X	
LOUNGE (217)	WING B											2	●							1	●			1	●	1	●			G	
LOUNGE STORAGE (217A)	WING B			1	●																									Y	
STORAGE (218)	WING B					1	●																							X	
STORAGE (219)	WING B					1	●																							X	
PRAYER ROOM (220)	WING B					1	●																							X	
OFFICE/SUPERVISION (221)	WING B							1	●							1	●							1	●	1	●			B	
CONFIDENTIAL WORK ROOM (222)	WING B							1	●							1	●							1	●	1	●			B	
OFFICE/SUPERVISION (223)	WING B							1	●							1	●							1	●	1	●			B	
RESEARCH THERAPY ROOM (224)	WING B							1	●							1	●							1	●	1	●			B	
VIEWING ROOM (224A)	WING B							1	●							1	●							1	●					A	
OFFICE/SUPERVISION (225)	WING B							1	●							1	●							1	●	1	●			B	
OFFICE (226)	WING B							1	●							1	●							1	●					A	
OFFICE/SUPERVISION (227)	WING B							1	●							1	●							1	●	1	●			B	
RESEARCH THERAPYROOM (228)	WING B							1	●							1	●							1	●					A	
VIEWING ROOM (228A)	WING B					1	●																							X	
OFFICE/SUPERVISION (229)	WING B							1	●							1	●							1	●	1	●			B	
RESEARCH DATA ANALYSIS ROOM (230)	WING B							1	●											2	●			1	●	1	●			F	
ELEVATOR MACHINE ROOM (231)	WING B			1	●																									Y	
OFFICE (232)	WING B							1	●							1	●							1	●					A	
LARGE GROUP ROOM (233)	WING B							3	●							1	●							1	●	1	●			E	
UNIVERSAL WASHROOM (WR234)	WING B													1	●															W	EXHAUST FAN TO BE CONTROLLED ON / OFF WITH LIGHTING
IT CLOSET (234)	WING B			1	●																									Y	
RECEPTION/COPY (235)	WING B							1	●							1	●							2	●	1	●			C	
ACTIVE STORAGE (235A)	WING B																														
ADMINISTRATION OFFICE (237)	WING B							1	●							1	●							1	●					A	
OFFICE (239)	WING B					1	●																							X	
STAIRWELL (ST201)	WING B																														AUTO ON 100%, VACANCY DIM. 50% WITHIN "F1" LUMINAIRE
STAIRWELL (ST203)	WING B																														AUTO ON 100%, VACANCY DIM. 50% WITHIN "F1" LUMINAIRE
STAIRWELL (ST205)	WING B	8	●																												
CORRIDOR (C201)	WING B																	5	●					2	●	2	●	P	AUTO ON 100%, VACANCY DIM. 25% (MIN. 10 LUX / 1FC)
WAITING RM / CORRIDOR (236, C202)	WING B																	1	●			1	●	1	●	1	●	P	AUTO ON 100%, VACANCY DIM. 25% (MIN. 10 LUX / 1FC)
CORRIDOR (C203)	WING B																					2	●	1	●	1	●	P	AUTO ON 100%, VACANCY DIM. 25% (MIN. 10 LUX / 1FC)
CORRIDOR (C204)	WING B																					2	●	1	●	1	●	P	AUTO ON 100%, VACANCY DIM. 25% (MIN. 10 LUX / 1FC)
CORRIDOR (C205)	WING B																					4	●	1	●	1	●	P	AUTO ON 100%, VACANCY DIM. 25% (MIN. 10 LUX / 1FC)
CORRIDOR (C206, C207, C208)	WING B																	4	●					1	●	1	●	P	AUTO ON 100%, VACANCY DIM. 25% (MIN. 10 LUX / 1FC)
ELEVATOR (EL201)	WING B	2	●																												3-WAY SWITCHES TO CONTROL LIGHTING IN EL101, EL201

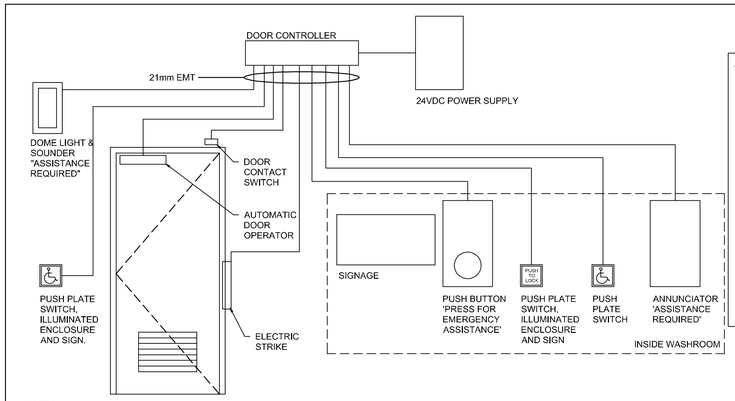

SEQUENCE OF OPERATION:
1. ILLUMINATED PUSH PLATES SHALL DISPLAY A GREEN FRAME WHEN THE WASHROOM IN UNOCCUPIED.
2. UPON PRESSING THE EXTERIOR PUSH PLATED, THE DOOR SHALL OPEN.
3. AFTER ENTRY, THE OCCUPANT SHALL PRESS THE 'PUSH TO LOCK" PUSH PLATE, WHICH WILL CHANGE BOTH INTERIOR AND EXTERIOR ILLUMINATED PUSH PLATES TO RED, AND LOCK THE DOOR VIA ELECTRIC STRIKE. PRESSING THE EXTERIOR PUSH PLATE WILL NOT HAVE ANY EFFECT.
4. THE OCCUPANT WILL EXIT BY PRESSING THE INTERIOR UNIVERSAL SYMBOL FOR ACCESSIBILITY, WHICH WILL UNLOCK THE STRIKE, ACTIVATE THE DOOR OPERATOR, AND RESET THE ILLUMINATED FRAMES TO GREEN. SIMILARLY, THE OCCUPANT MIGHT TURN THE DOOR HANDLE, AND OPEN THE DOOR. THE MAGNETIC DOOR CONTACT WILL REGISTER THIS AS A DOOR OPEN STATUS, AND RESET THE ILLUMINATED PUSH PLATES TO GREEN AND RELEASE THE ELECTRIC STRIKE.
5. IF THE EMERGENCY PUSHBUTTON IS DEPRESSED, THE EXTERIOR DOME LIGHT AND SOUNDER WILL ACTIVE IN COMMUNICATION WITH THE INTERIOR ANNUNCIATOR AND SOUNDER. AT THE SAME TIME, THE DOOR STRIKE WILL RELEASE AND THE ILLUMINATED FRAMES WILL TURN GREEN.

NOTES:
1. ALL WIRING SHALL BE PROVIDED PER MANUFACTURER AND BE INSTALLED IN EMT/CONDUITS OF MINIMUM 21mm DIAMETER.
2. PROVIDE ALL REQUIRED BACK BOXES TO SUIT. COORDINATE LOCATION WITH WASHROOM ACCESSORIES (GRAB BARS, TOILET PAPER HOLDER, ETC.)
3. REFER TO FLOOR PLAN FOR LOCATION OF DEVICES.
4. PROVIDE CONNECTION FOR POWER AND CONTROL TO ELECTRIC STRIKE AND DOOR OPERATOR.
5. PROVIDE POWER SUPPLY AS NOTED. SEE ELECTRICAL DRAWINGS.
6. PROVIDE ELECTRIC STRIKE AS NOTED.
7. EMERGENCY CALL SYSTEM BY CAMDEN.
   - .1 MULTI-FUNCTION RELAY TO CONTROL DOOR OPERATIONS. MOUNTED IN CEILING SPACE. PROVIDE J.BOX SUITABLE FOR ENCLOSURE.
   - .2 PUSH/PULL MAINTAINED MUSHROOM PUSHBUTTON WITH STAINLESS COVERPLATE ENGRAVED WITH "PRESS FOR EMERGENCY ASSISTANCE". MOUNT IN SINGLE GANG BOX AT 1000mm.
   - .3 LED ANNUNCIATOR WITH SOUNDER. ILLUMINATED MESSAGE WITH "ASSISTANCE REQUESTED" C/W STAINLESS COVERPLATE. MOUNT IN SINGLE GANG BOX AT 1000mm, NEXT TO PUSHBUTTON.
   - .4 WHITE, FIRE RATED EXPANDED PVC SIGNAGE. SIGN SHALL CONTAIN "IN THE EVENT OF AN EMERGENCY, PUSH EMERGENCY BUTTON AND AUDIBLE AND VISUAL SIGNAL WILL ACTIVATE." IN LETTERS AT LEAST 25mm HIGH WITH A 5mm STROKE, MOUNT ABOVE PUSHBUTTON.
   - .5 DOME LIGHT WITH SOUNDER C/W WHITE WEDGE SHAPED LENS AND STAINLESS COVERPLATE, MOUNT IN SINGLE GANG BOX ABOVE DOOR AT WASHROOM EXTERIOR.
   - .6 ILLUMINATED PUSHPLATE "PUSH TO LOCK". WITH LEGEND SIGN. MOUNT INSIDE WASHROOM. DISABLE SOUNDER.
   - .7 ILLUMINATED PUSHPLATE WITH THE UNIVERSAL SYMBOL OF ACCESSIBILITY, WITH LEGEND SIGN, MOUNT OUTSIDE WASHROOM, DISABLE SOUNDER.
   - .8 PUSHPLATE WITH THE UNIVERSAL SYMBOL OF ACCESSIBILITY, MOUNT INSIDE WASHROOM.
   - .9 MAGNETIC DOOR CONTACT FOR COMMUNICATION WITH DOOR CONTROLLER, MOUNT INSIDE WASHROOM.
   - .10 24VDC POWER SUPPLY FOR DOOR CONTROLLER, ILLUMINATED PUSH BUTTONS,. DOOR STRIKE, DOME LIGHT, SOUNDER, AND ANNUNCIATOR.
   - .11 DOOR OPERATOR AND DOOR STRIKE TO BE COORDINATED WITH OTHER TRADES TO ENSURE COMPATIBILITY.

1 / E30 ACCESSIBLE WASHROOM DOOR CONTROLS

SCALE: N.T.S.

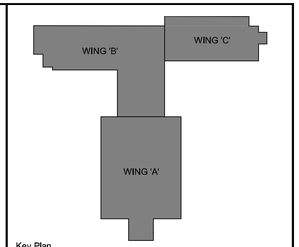

Key Plan

DO NOT SCALE DRAWINGS:

Contractors must check and verify all site conditions. Notify the Owner's Representative in writing before proceeding with the work if discrepancies are evident between the drawings and the site condition. No extras to the contract will be allowed if discrepancies were evident prior to start of work.

UNEXPECTED DISCOVERY OF ASBESTOS:

Where a friable material is discovered during construction, renovations and/or demolition, and it is suspected to contain asbestos, the Contractor must stop all work that may disturb the material. The Contractor shall advise the Owner of the discovery and await instructions from the owner.

A / B — A = Detail number; B = Drawing number where detailed

NO.	ISSUED	BY	DATE
2	ISSUED FOR CONVENIENCE	TA	APR 12, 2019
1	POST-TENDER ADDENDUM N0.1	TA	FEB 26, 2019
0	ISSUED FOR PERMIT & TENDER	TA	NOV 2, 2018

Orientation

Seal

Seal

UNIVERSITY of GUELPH
Design, Engineering & Construction
Physical Resources
Guelph, Ontario, N1G 2W1

Consultant — www.jlrichards.ca
J.L.Richards
ENGINEERS · ARCHITECTS · PLANNERS

Project
BUILDING #046
RENOVATIONS

Drawing Title
ELECTRICAL
LIGHTING CONTROL
SCHEDULE & DETAILS

Project No.
504034

Location
UNIVERSITY OF GUELPH
BUILDING #46

Scale: N.T.S.	Date: APR 12, 2019
Drawn by: MCD	Drawing No.
Checked By: HM	E30
Approved By: HM	
JLR #: 27915	

Cad File No. ----

MOTOR STARTER and CONTROL LIST

MS&C Ident	Equipment Information															Starter Information																																														Local Disconnecting Means										Control												Notes
	Equip Ident	Equipment Description	Equipment Location	Power Panel	Power Feeder	Power Requirements										Location				Starter Type			Manual Starter						Magnetic Starter										Soft Start Starter					VFD Starter								Auxiliaries																																	
						HP	MCA (Amps)	MOCP (Amps)	Volts	Phase	Supplied BY	Installed BY	Power Wiring BY	Start Up BY	Commisioned BY	Intergral with Equipment	MCC (Motor Control Center)	Remote	At Equipment	Manual Starter	Automatic Starter	VFD Starter	ON / OFF Switch	Toggle Switch	Key Operated	Push Button	Pilot Light	Rheostat	FVNR (Full Voltage Non-Reversing)	FVR (Full Voltage Reversing)	Combination	ON / OFF Switch	HOA Selector Switch	Push Button	Pilot Light	Control Transformer			ON / OFF Switch	HOA Selector Switch	Push Button	Pilot Light	Bypass	HMI (Human Machine Interface)	Bypass Selector Switch	Pilot Lights	Line Reactor	Harmonic Mitigation	SPD (Surge Protection Device)	Output Reactor	DV/DT Input Filter	LEGEND NOTE	LEGEND NOTE	LEGEND NOTE			Supplied BY	Installed BY	Wired BY	Start Up BY	Commisioned BY	Integral to Equipment	Motor Rated Toggle	NEMA 1 Rated	NEMA 3R Rated	Junction Box	Recepticale for Equipment Plug		Supplied BY	Installed BY	Wired BY	Manual Control	Automatic Control	BAS Control	BAS Monitoring	LEGEND NOTE	LEGEND NOTE	LEGEND NOTE	Supplied BY	Installed BY	Wired BY	Start Up By BY	Commisioned BY	
01	UH-1	HYDRONIC UNIT HEATER W/ FAN	ELECTRICAL ROOM (118)	B1-1		0.4kW		15A, 1P	120	1	M	M	E	M	M																																										●						E	E	E		●			C1			E	E	E	M	M	
02	UH-2	HYDRONIC UNIT HEATER W/ FAN	MECHANICAL PENTHOUSE	BP-9		0.4kW		15A, 1P	120	1	M	M	E	M	M																																										●						E	E	E		●			C1			E	E	E	M	M	
03	FF-1	FORCE FLOW HEATER	STAIRWELL (ST103)	B1-1		0.08kW		15A, 1P	120	1	M	M	E	M	M																																									●									E			●		C2			M	M	E	M	M	
04	P-3	DOMESTIC HOT WATER RECIRCULATION	MECH 120	B1-1		0.16kW		15A, 1P	120	1	M	M	E	M	M						●								●		●		●																				A1					E	E	E	E	E													●					M	M	M	M	M	
05	P-4	ELEVATOR SUMP PUMP	WORK AREA 136	B1-1X		0.4Kw		15A, 1P	120	1	M	M	E	M	M																																														●		E	E	E					C7			M	M	M	M	M	
06	P-1	HOT WATER HEATING SUPPLY - PERIMETER HEAT	MECH 120	DP-1E		5		15A, 3P	575	3	M	M	E	M	M							●																							●	●	●	●									M	M	E	M	M													●	●				M	M	M	M	M	
07	P-1A	HOT WATER HEATING SUPPLY - PERIMETER HEAT	MECH 120	DP-1E		5		15A, 3P	575	3	M	M	E	M	M							●																							●	●	●	●									M	M	E	M	M													●	●				M	M	M	M	M	
08	P-2	HOT WATER HEATING SUPPLY - RE-HEAT COILS	MECH 120	DP-1E		5		15A, 3P	575	3	M	M	E	M	M							●																							●	●	●	●									M	M	E	M	M													●	●				M	M	M	M	M	
09	P-2A	HOT WATER HEATING SUPPLY - RE-HEAT COILS	MECH 120	DP-1E		5		15A, 3P	575	3	M	M	E	M	M							●																							●	●	●	●									M	M	E	M	M													●	●				M	M	M	M	M	
10	P-5	GLYCOL HEATING SUPPLY	MECH 120	DP-1E		5		15A, 3P	575	3	M	M	E	M	M							●																							●	●	●	●									M	M	E	M	M													●	●				M	M	M	M	M	
11	P-6	GLYCOL HEATING SUPPLY	MECH 120	DP-1E		5		15A, 3P	575	3	M	M	E	M	M							●																							●	●	●	●									M	M	E	M	M													●	●				M	M	M	M	M	
12	AC-1	WING C	MECHANICAL PENTHOUSE	DP-1E		7.5		20A, 3P	575	3	M	M	E	M	M							●																							●	●	●	●									M	M	E	M	M			●					E	E	E			●	●				M	M	M	M	M	
13	RF-1	REMOTE R/A FAN	MECHANICAL PENTHOUSE	DP-1E		5		15A, 3P	575	3	M	M	E	M	M							●																							●	●	●	●									M	M	E	M	M			●					E	E	E			●	●				M	M	M	M	M	
14	AC-2	WING B NORTH	MECHANICAL PENTHOUSE	DP-1E		15		40A, 3P	575	3	M	M	E	M	M							●																							●	●	●	●									M	M	E	M	M			●					E	E	E			●	●				M	M	M	M	M	
15	RF-2	REMOTE R/A FAN	MECHANICAL PENTHOUSE	DP-1E		7.5		15A, 3P	575	3	M	M	E	M	M							●																							●	●	●	●									M	M	E	M	M			●					E	E	E			●	●				M	M	M	M	M	
16	AC-6	WING B SOUTH	MECHANICAL PENTHOUSE	DP-1E		15		40A, 3P	575	3	M	M	E	M	M							●																							●	●	●	●									M	M	E	M	M			●					E	E	E			●	●				M	M	M	M	M	
17	RF-6	REMOTE R/A FAN	MECHANICAL PENTHOUSE	DP-1E		7.5		15A, 3P	575	3	M	M	E	M	M							●																							●	●	●	●									M	M	E	M	M			●					E	E	E			●	●				M	M	M	M	M	
18	FC-1	COOLING UNIT	CCS 117B	DP-2E		0.19kW		15A, 1P	120	1	M	M	E	M	M						●								●				●																				A1					E	E	E	E	E		●						E	E	E			●	●	C13			M	M	M	M	M	
19																																																																																				
20	FC-3	COOLING UNIT/HEATING UNIT	ENTRANCE (C100/ST102)	B2-7		0.38kW		15A, 1P	120	1	M	M	E	M	M						●								●				●																				A1					E	E	E	E	E		●						E	E	E			●	●	C13			M	M	M	M	M	
21	FC-4	COOLING UNIT	STAIRWELL ST-201	B2-8		0.19kW		15A, 1P	120	1	M	M	E	M	M						●								●				●																				A1					E	E	E	E	E		●						E	E	E			●	●	C13			M	M	M	M	M	
22	FC-5	COOLING UNIT	ELEVATOR CONTROL ROOM	B2-8		0kW		15A, 1P	120	1	M	M	E	M	M						●								●				●																				A1					E	E	E	E	E		●						E	E	E			●	●	C13			M	M	M	M	M	
23	FC-6	COOLING UNIT	RESEARCH 230	B2-8		0.1kW		15A, 1P	120	1	M	M	E	M	M						●								●				●																				A1					E	E	E	E	E		●						E	E	E			●	●	C13			M	M	M	M	M	
24	EF-31	WASHROOM EXHAUST	UNIV. WR 138	B1-1X		0.25		15A, 1P	120	1	M	M	E	M	M																																													●						E	E	E		●				C16		E	E	E	E	E	
25	FF-2	FORCE FLOW HEATER	STAIRWELL ST101	B1-4		0.25		15A, 1P	120	1	M	M	E	M	M																																											●									E			●		C2			M	M	E	M	M	
26	EF-33	PURGE EXHAUST (ROOF)	OFFICE 133	BP-9		0.25		15A, 1P	120	1	M	M	E	M	M						●								●				●																				A1					E	E	E	E	E				●				E	E	E			●		C5	C14		M	M	M	M	M	
27	SBF-133	SUPPLY BOOST		B1-4		0.25		15A, 1P	120	1	M	M	E	M	M						●								●				●																				A1					E	E	E	E	E		●						E	E	E			●		C5	C14		M	M	M	M	M	
28	EF-34	PURGE EXHAUST (ROOF)	FAMILY 127	BP-9		0.25		15A, 1P	120	1	M	M	E	M	M						●								●				●																				A1					E	E	E	E	E				●				E	E	E			●		C5	C14		M	M	M	M	M	
29	SBF-127	SUPPLY BOOST		B1-3		0.25		15A, 1P	120	1	M	M	E	M	M						●								●				●																				A1					E	E	E	E	E		●						E	E	E			●		C5	C14		M	M	M	M	M	
30	EF-35	WASHROOM EXHAUST	WR116	B2-6		0.25		15A, 1P	120	1	M	M	E	M	M																																													●						E	E	E		●				C16		E	E	E	E	E	
31	EF-36	CUSTODIAN EXHAUST	CUST. 116	B1-2		0.25		15A, 1P	120	1	M	M	E	M	M																																														●						E	E	E		●			C6			E	E	E	E	E	
32	EF-37	GENERAL EXHAUST	ELECT 118	B1-1		0.25		15A, 1P	120	1	M	M	E	M	M																																														●						E	E	E		●			C1	C4		E	E	E	E	E	
33	EF-38	GENERAL EXHAUST	MECH 120	B1-1		0.25		15A, 1P	120	1	M	M	E	M	M																																														●						E	E	E		●			C1	C4		E	E	E	E	E	
34	EF-39	WASHROOM EXHAUST	UNIV. WR 234	B2-2X		0.25		15A, 1P	120	1	M	M	E	M	M																																														●						E	E	E		●				C16		E	E	E	E	E	
35	EF-40	GENERAL EXHAUST	LOUNGE 217	B2-7		0.25		15A, 1P	120	1	M	M	E	M	M																																														●						E	E	E	●				C15			E	E	E	E	E	
36	EF-41	PURGE EXHAUST (ROOF)	PRAYER 220	BP-9		0.25		15A, 1P	120	1	M	M	E	M	M						●								●				●																				A1					E	E	E	E	E				●				E	E	E			●		C5	C14		M	M	M	M	M	
37	SF-220	SUPPLY BOOST		B2-7		0.25		15A, 1P	120	1	M	M	E	M	M						●								●				●																				A1					E	E	E	E	E		●						E	E	E			●		C5	C14		M	M	M	M	M	
38	EF-42	CUSTODIAN EXHAUST	CUST. 201	B2-7		0.25		15A, 1P	120	1	M	M	E	M	M																																														●						E	E	E		●			C6			E	E	E	E	E	
39	EF-43	WASHROOM EXHAUST	WR 201	B2-6		0.25		15A, 1P	120	1	M	M	E	M	M																																														●						E	E	E		●				C16		E	E	E	E	E	
40	EF-44	GENERAL EXHAUST	KITCHENETTE 115	C1-2		0.25		15A, 1P	120	1	M	M	E	M	M																																														●						E	E	E	●				C15			E	E	E	E	E	
41	EF-45	GENERAL EXHAUST	HSKP 112	C1-2		0.25		15A, 1P	120	1	M	M	E	M	M																																														●						E	E	E		●			C6			E	E	E	E	E	
42	EF-46	WASHROOM EXHAUST	UNIV. WR 104	C1-1X		0.25		15A, 1P	120	1	M	M	E	M	M																																														●						E	E	E		●				C16		E	E	E	E	E	
43	EF-47	WASHROOM EXHAUST	W/C 104A	C1-1X		0.25		15A, 1P	120	1	M	M	E	M	M																																														●						E	E	E		●				C16		E	E	E	E	E	
44	EF-32	GENERAL EXHAUST	MECHANICAL PENTHOUSE	BP-9		0.25		15A, 1P	120	1	M	M	E	M	M																																														●						E	E	E		●			C1	C4		E	E	E	E	E	
64	P-7	STEAM CONDENSATE DUPLEX PUMP	MECH 120	DP-1E		2 X 3HP		20A, 3P	575	3	M	M	E	M	M																																													●					E	E	E			●		C9			M	M	E	M	M	
65		SPRINKLER JOCKEY PUMP	SPRINKLER 138	B1-4		0.25		15A, 1P	120	1	M	M	E	M	M						●								●																														E	E	E	E	E		●						E	E	E		●			C12			M	M	E	M	M	

NA	NA	NA Not Applicable
120	1	G = General Trade
240	3	M = Mechanical Trade
208		C = BAS Trade
575		E = Electrical Trade
460		O = General Trade
		1 = Division 1
		11 = Division 11
		?? = Division ??
		21 = Division 21
		22 = Division 22
		23 = Division 23
		25 = Division 25
		26 = Division 26
		27 = Division 27

	Nil
A1	Current Sensing Relay
A2	Fire Alarm Hardwired Contacts
A3	Door Switch
A4	Hard Wired Freeze Protection
A5	Thermistors
A6	??
A7	??
A8	??
A9	??
A10	??
A11	??
A12	??
A13	??
A14	??
A15	??

	Nil
C1	Remote 2 Stage 120V Thermostat
C2	Integral 2 Stage 120V Thermostat
C3	Interlocked with 120V Motorized Exhaust Air Damper
C4	Interlocked with 120V Motorized Outside Air Damper
C5	Interlocked with other Equipment, Refer to Notes
C6	Remote 120V Time Clock
C7	Integral ON / OFF Float Switch
C8	Remote Control Panel provided by Equipment Supplier
C9	Duplex Pump Controller Provided by the Manufacturer
C10	Triplex Pump Control Panel Provided by the Manufacturer
C11	Remote High Level Humidistat and Flow Switch
C12	Remote Pressure Switch
C13	Remote Temperature Sensor
C14	Room Push Button
C15	120V Motor Rated Timer Switch
C16	Interconnected With Occupancy Sensor Serving Space

1
E31
MOTOR STARTER AND CONTROL LIST
SCALE: N.T.S.

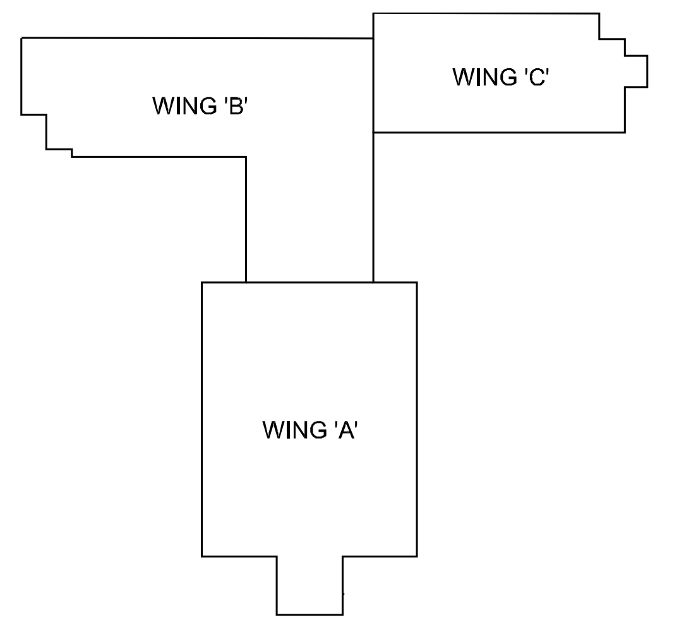

Key Plan

DO NOT SCALE DRAWINGS:

Contractors must check and verify all site conditions. Notify the Owner's Representative in writing before proceeding with the work if discrepancies are evident between the drawings and the site condition. No extras to the contract will be allowed if discrepancies were evident prior to start of work.

UNEXPECTED DISCOVERY OF ASBESTOS:

Where a friable material is discovered during construction, renovations and/or demolition, and it is suspected to contain asbestos, the Contractor must stop all work that may disturb the material. The Contractor shall advise the Owner of the discovery and await instructions from the owner.

A = Detail number
B = Drawing number where detailed

NO.	ISSUED	BY	DATE
2	ISSUED FOR CONVENIENCE	TA	APR 12, 2019
1	POST-TENDER ADDENDUM N0.1	TA	FEB 26, 2019
0	ISSUED FOR PERMIT & TENDER	TA	NOV 2, 2018

Orientation

Seal

Seal

UNIVERSITY of GUELPH
Design, Engineering & Construction
Physical Resources
Guelph, Ontario. N1G 2W1

Consultant
www.jlrichards.ca
J.L.Richards
ENGINEERS · ARCHITECTS · PLANNERS

Project
BUILDING #046
RENOVATIONS

Drawing Title
ELECTRICAL
MOTOR STARTER AND
CONTROL LIST

Project No.
504034

Location
UNIVERSITY OF GUELPH
BUILDING #46

Scale
N.T.S.

Date
APR 12, 2019

Drawn by
AM

Drawing No.
E31

Checked By
HM

Approved By
HM

JLR #
27915

Cad File No. ----

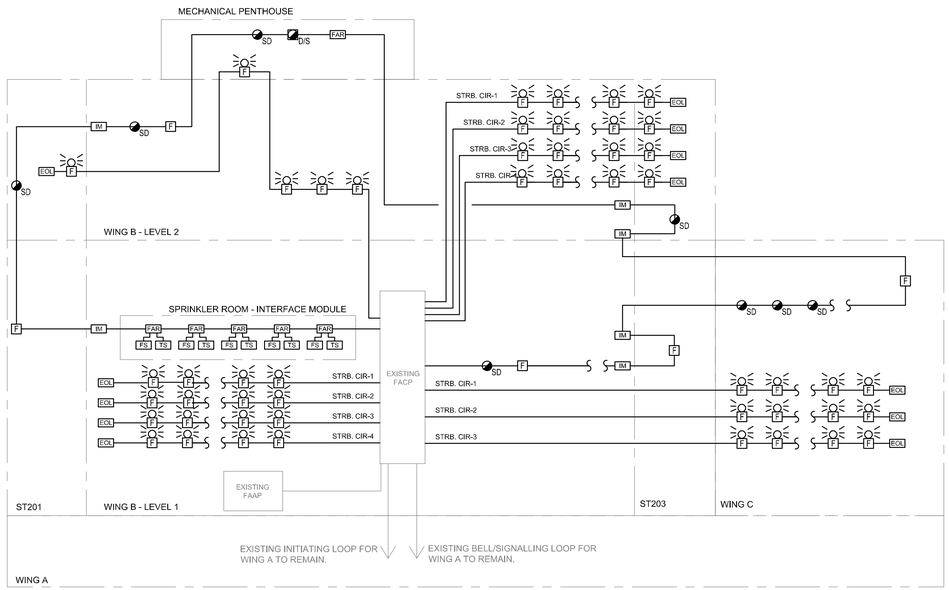

FIRE ALARM RISER GENERAL NOTES:

A. THE RISER DIAGRAM IS INDICATIVE OF A CLASS "A" INITIATING LOOP SYSTEM AND IS INTENDED TO BE AN EXAMPLE ONLY. ALL FIRE ALARM INITIATION LOOPS IN THIS CONTRACT TO BE WIRED TO MEET REQUIREMENTS OF CLASS "A" STANDARDS AND CAN BE MODIFIED TO SUIT SITE CONDITIONS UPON APPROVAL FROM THE ENGINEER. ALL CIRCUITS SHALL BE ADDRESSABLE. EACH BUILDING WILL BE PROVIDED WITH DEDICATED CIRCUIT WIRING FOR INDICATING AND SUPERVISORY CIRCUITS AS INDICATED AND ZONED ACCORDINGLY.REFER TO PLAN DRAWINGS FOR DEVICE QUANTITIES.

B. PROVIDE CLEARANCE FROM OUTGOING AND RETURN CIRCUITS. OUTGOING AND RETURN CIRCUITS HAVE A SEPARATION OF 10FT FROM EACH OTHER. CONFIRM EXACT ROUTING OF FIRE ALARM CONDUITS ON SITE.

C. THE CONTRACTOR SHALL DETERMINE EXACT PATH/ROUTING OF ALL SIGNAL AND INITIATING CIRCUITS ON SITE DURING CONSTRUCTION.

D. ALL SIGNALLING SHALL BE VIA ELECTRONIC AUDIBLE AND VISUAL DEVICES AS SHOWN. STROBES SHALL BE ADJUSTABLE CANDELA LEVELS - MAXIMUM OF 110cd INTENSITY BUT SIZED TO SUIT AREA.

E. NO CIRCUIT SHALL BE LOADED TO MORE THAN 80% OF ITS MAXIMUM RATED CAPACITY.

F. FIRE ALARM SYSTEM WIRING SHALL BE PERMANENTLY LABELLED AT EACH END OF EVERY CONDUCTOR.

G. FIRE ALARM SYSTEM WIRING SHALL BE CONTINUOUS FROM PANEL TO DEVICE NO SPLICING.

H. ALL FIRE ALARM SYSTEM INITIATION CIRCUITS ARE TO BE WIRED WITH 1 PAIR #16 AWG TWISTED SHIELDED 105°C FAS TYPE FIRE ALARM CABLE IN 1"C.

I. ALL FIRE ALARM SYSTEM SIGNAL APPLIANCE CIRCUITS ARE TO BE WIRED WITH 2-#14 AWG 105°C FAS TYPE FIRE ALARM CABLE.

J. ALL FIRE ALARM SYSTEM COMMUNICATION CIRCUITS ARE TO BE INSTALLED IN 3/4"C. PROVIDE COMMUNICATIONS CABLES AS REQUIRED BY FIRE ALARM SYSTEM MANUFACTURER.

K. ALL POWER SUPPLIES FOR SIGNAL CIRCUITS ARE TO BE LOCATED WITHIN THE FIRE ALARM CONTROL PANELS (F.A.C.P.). FIELD MOUNTED/LOCATED SIGNAL CIRCUIT POWER SUPPLY PANELS WILL NOT BE ACCEPTED.

L. REFER TO FLOOR PLAN FOR EXACT QUANTITIES OF FIRE ALARM DEVICES.

1 / E32 FIRE ALARM RISER DIAGRAM

LINETYPE LEGEND	
EXISTING	
NEW	

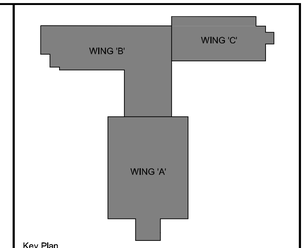

Key Plan

DO NOT SCALE DRAWINGS:

Contractors must check and verify all site conditions. Notify the Owner's Representative in writing before proceeding with the work if discrepancies are evident between the drawings and the site condition. No extras to the contract will be allowed if discrepancies were evident prior to start of work.

UNEXPECTED DISCOVERY OF ASBESTOS:

Where a friable material is discovered during construction, renovations and/or demolition, and it is suspected to contain asbestos, the Contractor must stop all work that may disturb the material. The Contractor shall advise the Owner of the discovery and await instructions from the owner.

A / B — A = Detail number; B = Drawing number where detailed

NO.	ISSUED	BY	DATE
1	ISSUED FOR CONVENIENCE	TA	APR 12, 2019
0	ISSUED FOR PERMIT & TENDER	TA	NOV 2, 2018

Orientation

Seal

Seal

UNIVERSITY of GUELPH
Design, Engineering & Construction
Physical Resources
Guelph, Ontario. N1G 2W1

Consultant www.jlrichards.ca
J.L.Richards
ENGINEERS · ARCHITECTS · PLANNERS

Project
BUILDING #046
RENOVATIONS

Drawing Title
ELECTRICAL
FIRE ALARM RISER
DIAGRAM

Project No.
504034

Location
UNIVERSITY OF GUELPH
BUILDING #46

Scale: NTS	Date: APR 12, 2019
Drawn by: AM	Drawing No.
Checked By: HM	E32
Approved By: HM	
JLR #: 27915	

Cad File No. -----

NEW PANEL "046 PP B1-1"

208/120V, 3PH, 4-WIRE
225A MAINS
SURFACE MOUNTED
10 KAIC

LOAD	DESCRIPTION	BKR	CCT	CCT	BKR	DESCRIPTION	LOAD
	RECEPTACLES RM. 119	15A, 1P	1	2	15A, 1P	UH-1	
	P-3	15A, 1P	3	4	15A, 1P	SPARE	
	EF-37	15A, 1P	5	6	15A, 1P	EF-38	
	FF-1	15A, 1P	7	8	15A, 1P	GLYCOL FILLING STATION RM. 120	
	CONTROLLED RECEPTACLES RM. 145A, 129 (1)	15A, 1P	9	10	20A, 1P	CONTROLLED RECEPTACLES RM. 123F (1)	
	CONTROLLED RECEPTACLES RM. 136 (1)	15A, 1P	11	12	15A, 1P	CONTROLLED RECEPTACLES RM. 132 (1)	
	CONTROLLED RECEPTACLES RM. 129 (1)	15A, 1P	13	14	15A, 1P	CONTROLLED RECEPTACLES RM. 217 (1)	
	CONTROLLED RECEPTACLES RM. 233 (1)	15A, 1P	15	16	15A, 1P	CONTROLLED RECEPTACLES RM. 217 (1)	
	CONTROLLED RECEPTACLES RM. 233 (1)	15A, 1P	17	18	15A, 1P	CONTROLLED RECEPTACLES RM. 239 (1)	
	CONTROLLED RECEPTACLES RM. 230 (1)	15A, 1P	19	20	15A, 1P	CONTROLLED RECEPTACLES RM. 222 (1)	
	RECEPTACLE RM. 118	20A, 1P	21	22	15A, 1P	SPARE	A6.37
	RECEPTACLE RM. 120	20A, 1P	23	24	15A, 1P	SPARE	A6.37
	SPARE	15A, 1P	25	26	20A, 1P	SPARE	
	SPARE	15A, 1P	27	28	20A, 1P	SPARE	
	SPARE	20A, 1P	29	30	15A, 1P	SPARE	
	SPARE	20A, 1P	31	32	15A, 1P	SPARE	
	SPACE		33	34		SPACE	
	SPACE		35	36		SPACE	
	SPACE		37	38		SPACE	
	SPACE		39	40		SPACE	
	SPACE		41	42		SPACE	

NEW PANEL "046 PP B1-2"

208/120V, 3PH, 4-WIRE
225A MAINS
RECESS MOUNTED
10 KAIC

LOAD	DESCRIPTION	BKR	CCT	CCT	BKR	DESCRIPTION	LOAD
	RECEPTACLES RM. C103, 117	20A, 1P	1	2	15A, 1P	RECEPTACLES RM. 116, WR116	
	RECEPTACLES RM. 123A	15A, 1P	3	4	15A, 1P	RECEPTACLES RM. 123B, 123C, 123F	
	RECEPTACLES RM. 123D, 123E	15A, 1P	5	6	20A, 1P	MICROWAVE RM. 123F	
	REFRIGERATOR RM. 123F	15A, 1P	7	8	15A, 1P	AUTOMATIC SINKS RM. WR116	
	VAV BOXES	15A, 1P	9	10	15A, 1P	SPARE	
	SPARE	15A, 1P	11	12	15A, 1P	SPARE	
	SPARE	15A, 1P	13	14	15A, 1P	SPARE	
	EF-36	15A, 1P	15	16	15A, 1P	RECEPTACLES RM. 123F	
	SPARE	15A, 1P	17	18	20A, 1P	RECEPTACLES RM. 117B	
	SPARE	15A, 1P	19	20	20A, 1P	RECEPTACLES RM. 117B	
	RECEPTACLES RM. 123	15A, 1P	21	22	15A, 1P	SPARE	
	WATER FOUNTAIN RM. C103	15A, 1P	23	24	15A, 1P	SPARE	
	SPARE	20A, 1P	25	26	15A, 1P	SPARE	
	SPARE	20A, 1P	27	28	15A, 1P	SPARE	
	SPARE	20A, 1P	29	30	20A, 1P	SPARE	
	SPACE		31	32		SPACE	
	SPACE		33	34		SPACE	
	SPACE		35	36		SPACE	
	SPACE		37	38		SPACE	
	SPACE		39	40		SPACE	
	SPACE		41	42		SPACE	

NEW PANEL "046 PP B1-3"

208/120V, 3PH, 4-WIRE
225A MAINS
RECESS MOUNTED
10 KAIC

LOAD	DESCRIPTION	BKR	CCT	CCT	BKR	DESCRIPTION	LOAD
	RECEPTACLES RM. 129	15A, 1P	1	2	15A, 1P	RECEPTACLES RM. 129	
	RECEPTACLES RM. 127	15A, 1P	3	4	15A, 1P	RECEPTACLES RM. 125	
	RECEPTACLES RM. 125A, 127A	15A, 1P	5	6	15A, 1P	RECEPTACLES RM. C100	
	RECEPTACLES RM. C104, C105	20A, 1P	7	8	15A, 1P	RECEPTACLES RM. 126B, 126C	
	RECEPTACLES RM. 126A, 126D	15A, 1P	9	10	15A, 1P	RECEPTACLES RM. 124	
	RECEPTACLES RM. 130	15A, 1P	11	12	15A, 1P	RECEPTACLES RM. 128	
	SBF-127	15A, 1P	13	14	15A, 1P	CEIL SPACE RECEPTACLES RM. 125A, 127A	
	RECEPTACLES RM. 129	15A, 1P	15	16	15A, 1P	SPARE	
	SPARE	15A, 1P	17	18	15A, 1P	SPARE	
	SPARE	15A, 1P	19	20	15A, 1P	SPARE	
	SPARE	20A, 1P	21	22	20A, 1P	SPARE	
	SPARE	20A, 1P	23	24	20A, 1P	SPARE	
	SPACE		25	26		SPACE	
	SPACE		27	28		SPACE	
	SPACE		29	30		SPACE	
	SPACE		31	32		SPACE	
	SPACE		33	34		SPACE	
	SPACE		35	36		SPACE	
	SPACE		37	38		SPACE	
	SPACE		39	40		SPACE	
	SPACE		41	42		SPACE	

TOTAL CONNECTED LOAD: 0 WATTS

PHASE LOAD TO BE FILLED IN BY CONTRACTOR:
LOAD PHASE A: _____ LOAD PHASE B: _____ LOAD PHASE C: _____

REMARKS
1. ALL LOADS ARE IN WATTS, UNLESS OTHERWISE NOTED.
2. † DEDICATED NEUTRAL
3. ✱ GFI
4. ■ LOCKED

NEW PANEL "046 PP B1-4"

208/120V, 3PH, 4-WIRE
225A MAINS
RECESS MOUNTED
10 KAIC

LOAD	DESCRIPTION	BKR	CCT	CCT	BKR	DESCRIPTION	LOAD
	RECEPTACLES RM. 149	15A, 1P	1	2	15A, 1P	RECEPTACLES RM. 147	
	RECEPTACLES RM. 145, 145A	15A, 1P	3	4	15A, 1P	RECEPTACLES RM. 145A	
	RECEPTACLES RM. 143	15A, 1P	5	6	15A, 1P	RECEPTACLES RM. 139	
	RECEPTACLES RM. 141	15A, 1P	7	8	15A, 1P	RECEPTACLES RM. 137	
	RECEPTACLES RM. 135	15A, 1P	9	10	15A, 1P	RECEPTACLES RM. WR138	
	RECEPTACLES RM. 136	15A, 1P	11	12	15A, 1P	RECEPTACLES RM. 136	
	RECEPTACLES RM. 136, 138	15A, 1P	13	14	15A, 1P	RECEPTACLES RM. 136B, 136C	
	RECEPTACLES RM. 134	15A, 1P	15	16	15A, 1P	RECEPTACLES RM. 134	
	RECEPTACLES RM. C106, C108	20A, 1P	17	18	15A, 1P	RECEPTACLES RM. 132	
	JOCKEY PUMP	15A, 1P	19	20	15A, 1P	RECEPTACLES RM. 132	
	RECEPTACLES RM. 133	15A, 1P	21	22	15A, 1P	RECEPTACLES RM. 147, 149	
	SPARE	15A, 1P	23	24	15A, 1P	SBF-133	
	VAV BOXES	15A, 1P	25	26	15A, 1P	FF-2	
	RECEPTACLES RM. C107, 131	15A, 1P	27	28	15A, 1P	AUTOMATIC SINKS RM. WR138	
	WATER FOUNTAIN RM. 143	15A, 1P	29	30	15A, 1P	SPARE	
	SPARE	15A, 1P	31	32	15A, 1P	SPARE	
	SPARE	15A, 1P	33	34	15A, 1P	SPARE	
	SPARE	20A, 1P	35	36	20A, 1P	SPARE	
	SPARE	20A, 1P	37	38	20A, 1P	SPARE	
	SPACE		39	40		SPACE	
	SPACE		41	42		SPACE	

NEW PANEL "046 PP B2-5"

208/120V, 3PH, 4-WIRE
225A MAINS
RECESS MOUNTED
10 KAIC

LOAD	DESCRIPTION	BKR	CCT	CCT	BKR	DESCRIPTION	LOAD
	RECEPTACLES RM. 212, 214	15A, 1P	1	2	15A, 1P	RECEPTACLES RM. 213	
	RECEPTACLES RM. 211	15A, 1P	3	4	15A, 1P	RECEPTACLES RM. 210, 210A	
	RECEPTACLES RM. C206	20A, 1P	5	6	15A, 1P	RECEPTACLES RM. 202, 203	
	RECEPTACLES RM. 204, 205	15A, 1P	7	8	15A, 1P	RECEPTACLES RM. 206, 207	
	RECEPTACLES RM. 208, 209	15A, 1P	9	10	15A, 1P	CEIL SPACE RECEPTACLES RM. 206, 210A, 214	
	SPARE	15A, 1P	11	12	15A, 1P	SPARE	
	SPARE	15A, 1P	13	14	15A, 1P	SPARE	
	SPARE	15A, 1P	15	16	15A, 1P	SPARE	
	SPARE	15A, 1P	17	18	15A, 1P	RECEPTACLES RM. 215	
	RECEPTACLES RM. WR201, 201	15A, 1P	19	20	15A, 1P	SPARE	
	RECEPTACLES RM. WR201	15A, 1P	21	22	15A, 1P	SPARE	
	WATER FOUNTAIN RM. C206	15A, 1P	23	24	15A, 1P	AUTOMATIC SINKS RM. WR201	
	SPARE	15A, 1P	25	26	15A, 1P	SPARE	
	SPARE	15A, 1P	27	28	15A, 1P	SPARE	
	SPARE	15A, 1P	29	30	15A, 1P	SPARE	
	SPARE	20A, 1P	31	32	20A, 1P	SPARE	
	SPARE	20A, 1P	33	34	20A, 1P	SPARE	
	SPACE		35	36		SPACE	
	SPACE		37	38		SPACE	
	SPACE		39	40		SPACE	
	SPACE		41	42		SPACE	

NEW LIGHTING PANEL "046 PP B2-6"

208/120V, 3PH, 4-WIRE
225A MAINS
RECESS MOUNTED
14 KAIC

LOAD	DESCRIPTION	BKR	CCT	CCT	BKR	DESCRIPTION	LOAD
	LEVEL 1 LTG (143, 145, 145A, 147, 149)	15A, 1P	1	2	15A, 1P	LEVEL 1 LTG (132, 134, 136, 136B, 136C)	
	LEVEL 1 LTG (131,133, 135, 137, 139, 141)	15A, 1P	3	4	15A, 1P	LEVEL 1 LTG (124, 126A, 126B, 126C, 126D, 128, 130)	
	LEVEL 1 LTG (125, 125A, 127, 127A, 129)	15A, 1P	5	6	15A, 1P	LEVEL 1 LTG (123, 123A, 123B, 123C, 123D, 123E, 123F)	
	LEVEL 1 CORR. LTG (C104, C105, C106, C107, C108, ST101A, 138)	15A, 1P	7	8	15A, 1P	LEVEL 1 LTG / EF-35 (116, WR116)	
	LEVEL 1 CORR. LTG (C102, C103, 119, 121)	15A, 1P	9	10	15A, 1P	SPARE	
	SPARE	15A, 1P	11	12	15A, 1P	SPARE	
	LEVEL 2 LTG (233, 235, 235A, 237, 239)	15A, 1P	13	14	15A, 1P	LEVEL 2 LTG (224, 224A, 226, 228, 228A, 230, 232)	
	LEVEL 2 LTG (219, 221, 223, 225, 227, 229, 231)	15A, 1P	15	16	15A, 1P	LEVEL 2 LTG (215, 216, 218, 220, 222)	
	LEVEL 2 LTG (217, 217A)	15A, 1P	17	18	15A, 1P	LEVEL 2 LTG (210, 210A, 211, 212, 213, 214)	
	LEVEL 1 CORR. LTG (C104, C105, C106, C107, C108, ST101A)	15A, 1P	19	20	15A, 1P	LEVEL 2 LTG (202, 203, 204, 205, 206, 207, 208, 209)	
	LEVEL 1 CORR. LTG (C102, C103)	15A, 1P	21	22	15A, 1P	LEVEL 2 LTG / EF-43 (201, WR201)	
	LEVEL 2 LTG (ST102, C100)	15A, 1P	23	24	20A, 1P	EXTERIOR LIGHTING WING B / TIME CLOCK	
	PENTHOUSE LTG.	15A, 1P	25	26	20A, 1P	EXTERIOR LIGHTING WING B / TIME CLOCK	
	SPARE	15A, 1P	27	28	15A, 1P	SPARE	
	SPACE		29	30	15A, 1P	SPARE	
	SPACE		31	32		SPACE	
	SPACE		33	34		SPACE	
	SPACE		35	36		SPACE	
	SPACE		37	38		SPACE	
	SPACE		39	40		SPACE	
	SPACE		41	42		SPACE	

GENERAL NOTES:

A. KA RATINGS FOR PANELS ARE INDICATIVE. FINAL KA RATINGS SHALL BE VERIFIED AS PER ARC FLASH COORDINATION REPORT.

DRAWING NOTES

(1) CIRCUIT TO BE CONTROLLED VIA RELAY PANEL

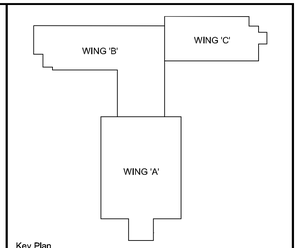

Key Plan

DO NOT SCALE DRAWINGS:

Contractors must check and verify all site conditions. Notify the Owner's Representative in writing before proceeding with the work if discrepancies are evident between the drawings and the site condition. No extras to the contract will be allowed if discrepancies were evident prior to start of work.

UNEXPECTED DISCOVERY OF ASBESTOS:

Where a friable material is discovered during construction, renovations and/or demolition, and it is suspected to contain asbestos, the Contractor must stop all work that may disturb the material. The Contractor shall advise the Owner of the discovery and await instructions from the owner.

A = Detail number
B = Drawing number where detailed

NO.	ISSUED	BY	DATE
2	ISSUED FOR CONVENIENCE	TA	APR 12, 2019
1	POST-TENDER ADDENDUM N0.1	TA	FEB 26, 2019
0	ISSUED FOR PERMIT & TENDER	TA	NOV 2, 2018

Orientation

Seal

Seal

UNIVERSITY of GUELPH
Design, Engineering & Construction
Physical Resources
Guelph, Ontario. N1G 2W1

Consultant
www.jlrichards.ca
J.L.Richards
ENGINEERS · ARCHITECTS · PLANNERS

Project
BUILDING #046
RENOVATIONS

Drawing Title
ELECTRICAL
PANEL SCHEDULES - 1 OF 4

Project No.
504034

Location
UNIVERSITY OF GUELPH
BUILDING #46

Scale: N.T.S.
Date: APR 12, 2019
Drawn by: SO
Drawing No.: E33
Checked By: HM
Approved By: HM
JLR #: 27915

Cad File No. ----

NEW PANEL "046 PP B2-7"

208/120V, 3PH, 4-WIRE
225A MAINS
RECESS MOUNTED
10 KAIC

LOAD	DESCRIPTION	BKR	CCT	CCT	BKR	DESCRIPTION	LOAD
	RECEPTACLES RM. 219, CORRIDOR	15A, 1P	1	2	15A, 1P	RECEPTACLES RM. 227	
	RECEPTACLES RM. 225	15A, 1P	3	4	15A, 1P	RECEPTACLES RM. 223	
	RECEPTACLES RM. 221	15A, 1P	5	6	20A, 1P	RECEPTACLES RM. 217	
	RECEPTACLES RM. 217	20A, 1P	7	8	15A, 1P	RECEPTACLE RM. 217	
	RECEPTACLE RM. 217	15A, 1P	9	10	15A, 1P	RECEPTACLE RM. 217	
	RECEPTACLE RM. 217	15A, 1P	11	12	15A, 1P	RECEPTACLES RM. 228A	
	RECEPTACLES RM. 217	15A, 1P	13	14	15A, 1P	RECEPTACLES RM. 217	
1	RECEPTACLE RM. 217 (DISHWASHER)	15A, 1P	15	16	15A, 1P	EF-42	
1	RECEPTACLE RM. 217 (DISHWASHER)	15A, 1P	17	18	15A, 1P	SPARE	1
1	CEIL SPACE RECEPTACLES 224A, 228A	15A, 1P	19	20	15A, 1P	RECEPTACLES RM. 224	
	RECEPTACLES RM. C201	20A, 1P	21	22	15A, 1P	RECEPTACLES RM. 216, 218, 220	
	RECEPTACLES RM. 222, 224A	15A, 1P	23	24	15A, 1P	RECEPTACLES RM. 215	
	RECEPTACLES RM. 222	15A, 1P	25	26	15A, 1P	VAV BOXES	
	SF-220	15A, 1P	27	28	15A, 1P	SPARE	1
1	SPARE	15A, 1P	29	30	15A, 1P	EF-40	
	SPARE	15A, 1P	31	32	15A, 1P	FC-3	
	SPARE	15A, 1P	33	34	15A, 1P	SPARE	
	SPARE	15A, 1P	35	36	15A, 1P	SPARE	
	SPARE	20A, 1P	37	38	20A, 1P	SPARE	
	SPACE		39	40		SPACE	
	SPACE		41	42		SPACE	

TOTAL CONNECTED LOAD: 0 WATTS

PHASE LOAD TO BE FILLED IN BY CONTRACTOR:
LOAD PHASE A: _____ LOAD PHASE B: _____ LOAD PHASE C: _____

REMARKS
1. ALL LOADS ARE IN WATTS, UNLESS OTHERWISE NOTED.
2. † DEDICATED NEUTRAL
3. ✳ GFI
4. ■ LOCKED

NEW PANEL "046 PP B2-8"

208/120V, 3PH, 4-WIRE
225A MAINS
RECESS MOUNTED
10 KAIC

LOAD	DESCRIPTION	BKR	CCT	CCT	BKR	DESCRIPTION	LOAD
	ELEVATOR CAB RECEPTACLE	15A, 1P	1	2	15A, 1P	RECEPTACLES RM. 239	
	RECEPTACLES RM. 237	15A, 1P	3	4	15A, 1P	RECEPTACLES RM. 235, 235A	
	RECEPTACLES RM. 235	15A, 1P	5	6	15A, 1P	RECEPTACLES RM. 236	
	RECEPTACLES RM. C201	20A, 1P	7	8	15A, 1P	RECEPTACLES RM. 233	
	RECEPTACLES RM. 233	15A, 1P	9	10	15A, 1P	RECEPTACLES RM. 229	
	RECEPTACLES RM. 231	15A, 1P	11	12	15A, 1P	RECEPTACLES RM. 230	
	RECEPTACLES RM. 230	15A, 1P	13	14	15A, 1P	RECEPTACLES RM. 228, 230	
	RECEPTACLES RM. 226, 232	15A, 1P	15	16	15A, 1P	VAV BOXES	
	FC-4	15A, 1P	17	18	15A, 1P	SPARE	
1	SPARE	15A, 1P	19	20	15A, 1P	FC-6	
	FC-5	15A, 1P	21	22	15A, 1P	WATER FOUNTAIN RM. 236	
	RECEPTACLES RM. WR234	15A, 1P	23	24	20A, 1P	ELEVATOR SHAFT RECEPTACLES	
	SPARE	15A, 1P	25	26	15A, 1P	AUTOMATIC SINKS RM. WR234	
	SPARE	15A, 1P	27	28	15A, 1P	SPARE	
	SPARE	15A, 1P	29	30	15A, 1P	SPARE	
	SPARE	20A, 1P	31	32	20A, 1P	SPARE	
	SPARE	20A, 1P	33	34	20A, 1P	SPARE	
	SPACE		35	36		SPACE	
	SPACE		37	38		SPACE	
	SPACE		39	40		SPACE	
	SPACE		41	42		SPACE	

NEW PANEL "046 PP BP-9"

208/120V, 3PH, 4-WIRE
225A MAINS
SURFACE MOUNTED
10 KAIC

LOAD	DESCRIPTION	BKR	CCT	CCT	BKR	DESCRIPTION	LOAD
	RECEPTACLES RM. 302	20A, 1P	1	2	20A, 1P	RECEPTACLES RM. 302	
	EF-33	15A, 1P	3	4	15A, 1P	EF-34	
	EF-41	15A, 1P	5	6	20A, 1P	RECEPTACLES - ROOF	
	EF-32	15A, 1P	7	8	15A, 1P	UH-2	
	SPARE	15A, 1P	9	10	15A, 1P	SPARE	
	SPARE	15A, 1P	11	12	15A, 1P	SPARE	
	SPARE	20A, 1P	13	14	20A, 1P	SPARE	
	SPARE	20A, 1P	15	16	20A, 1P	SPARE	
	SPACE		17	18		SPACE	
	SPACE		19	20		SPACE	
	SPACE		21	22		SPACE	
	SPACE		23	24		SPACE	
	SPACE		25	26		SPACE	
	SPACE		27	28		SPACE	
	SPACE		29	30		SPACE	

NEW PANEL "046 PP B1-1X"

208/120V, 3PH, 4-WIRE
225A MAINS
RECESS MOUNTED
10 KAIC

LOAD	DESCRIPTION	BKR	CCT	CCT	BKR	DESCRIPTION	LOAD
	DOOR OPERATORS RM. ST101A	15A, 1P	1	2	15A, 1P	EMERGENCY CALL STATION	
	DOOR OPERATORS RM. WR138, 143	15A, 1P	3	4	25A, 1P	P-4 ✳	
	RECEPTACLES RM. 117B	20A, 1P	5	6	20A, 1P	RECEPTACLES RM. 117B	
	RECEPTACLES RM. 117B	20A, 1P	7	8	20A, 1P	RECEPTACLES RM. 117A	
	RECEPTACLES RM. 117A	20A, 1P	9	10	20A, 1P	RECEPTACLES RM. 117A	
	DOOR OPERATORS RM. C106	15A, 1P	11	12	15A, 1P	DOOR OPERATORS RM. C103, C104	
	DOOR OPERATORS RM. C100	15A, 1P	13	14	15A, 1P	ACCESS CONTROL POWER SUPPLY	
	RECEPTACLE RM. 117A	20A, 2P	15	16	15A, 1P	ACCESS CONTROL POWER SUPPLY	
			17	18	15A, 1P	ACCESS CONTROL POWER SUPPLY	
	SPARE	15A, 1P	19	20	15A, 1P	ACCESS CONTROL POWER SUPPLY	
	SPARE	15A, 1P	21	22	15A, 1P	ACCESS CONTROL POWER SUPPLY	
	SPARE	20A, 1P	23	24	15A, 1P	ACCESS CONTROL POWER SUPPLY	
	SPARE	20A, 1P	25	26	20A, 1P	SPARE	
	SPARE	15A, 1P	27	28	15A, 1P	SPARE	
	SPARE	15A, 1P	29	30	15A, 1P	EXTERIOR CANOPY / PATHWAY LTG. & TIME CLOCK	
	ELEVATOR SHAFT LIGHTING (EL101, EL201)	15A, 1P	31	32	15A, 1P	STAIRWELL LIGHTING LEVEL 1 & 2 (ST103)	
	LEVEL 1 LTG / EBU#1 (118, 120)	15A, 1P	33	34	15A, 1P	SPARE	
	LEVEL 1 LTG & EF-31 (WR138)	15A, 1P	35	36	15A, 1P	STAIRWELL LIGHTING LEVEL 1 & 2 (ST101)	
	LEVEL 1 LTG (124, 132, 136, WR116)	15A, 1P	37	38	15A, 1P	LEVEL 1 CORR. LTG. (C102, C103, C105)	
	LEVEL 1 LTG (117, 117A, 117B, 123, 123A, 123C)	15A, 1P	39	40	15A, 1P	EXIT LIGHTING (ALL EGRESS LEVEL 1 WING B)	■
	LEVEL 1 LTG (125, 127, 129, 133, 135, 137, 139, 143, 145)	15A, 1P	41	42	15A, 1P	LEVEL 1 CORR. LTG (1C104, C106, C107, C108, ST101A)	

NEW PANEL "046 PP B2-2X"

208/120V, 3PH, 4-WIRE
225A MAINS
RECESS MOUNTED
10 KAIC

LOAD	DESCRIPTION	BKR	CCT	CCT	BKR	DESCRIPTION	LOAD
	DOOR OPERATORS	15A, 1P	1	2	15A, 1P	ELEVATOR CAB LIGHTING & VENTILATION	
	DOOR OPERATORS	15A, 1P	3	4	15A, 1P	EMERGENCY CALL STATION	
	RECEPTACLE RM. 234	20A, 1P	5	6	15A, 1P	ACCESS CONTROL POWER SUPPLY	
	RECEPTACLE RM. 234	20A, 1P	7	8	15A, 1P	SPARE	
	SPARE	15A, 1P	9	10	15A, 1P	SPARE	
	SPARE	15A, 1P	11	12	15A, 1P	SPARE	
	SPARE	20A, 1P	13	14	20A, 1P	SPARE	
	SPARE	20A, 1P	15	16	20A, 1P	SPARE	
	SPACE		17	18		SPACE	
	SPACE		19	20		SPACE	
	SPACE		21	22		SPACE	
	SPACE		23	24		SPACE	
	SPACE		25	26		SPACE	
	SPARE	15A, 1P	27	28	15A, 1P	SPARE	
	SPARE	15A, 1P	29	30	15A, 1P	SPARE	
	SPARE	15A, 1P	31	32	15A, 1P	SPARE	
	LEVEL 3 PENTHOUSE EBU#2	15A, 1P	33	34	15A, 1P	SPARE	
	LEVEL 2 LTG & EF-39 (WR234)	15A, 1P	35	36	15A, 1P	STAIRWELL LIGHTING LEVEL 1 & 2 (ST102, C100)	
	LEVEL 2 LTG (215, 222, 224, 230, WR201)	15A, 1P	37	38	15A, 1P	LEVEL 2 CORR. LTG. (C201, C205, C206)	
	LEVEL 2 LTG (202, 203, 204, 205, 207, 208, 209, 211, 213)	15A, 1P	39	40	15A, 1P	EXIT LIGHTING (ALL EGRESS LEVEL 2 & 3 WING B)	■
	LEVEL 2 LTG (217, 221, 223, 225, 227, 229, 233, 235)	15A, 1P	41	42	15A, 1P	LEVEL 2 CORR. LTG (C201, C203, C204, C202, 236)	

GENERAL NOTES:

A. KA RATINGS FOR PANELS ARE INDICATIVE. FINAL KA RATINGS SHALL BE VERIFIED AS PER ARC FLASH COORDINATION REPORT.

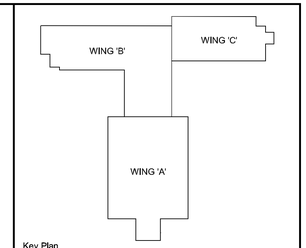

Key Plan

DO NOT SCALE DRAWINGS:

Contractors must check and verify all site conditions. Notify the Owner's Representative in writing before proceeding with the work if discrepancies are evident between the drawings and the site condition. No extras to the contract will be allowed if discrepancies were evident prior to start of work.

UNEXPECTED DISCOVERY OF ASBESTOS:

Where a friable material is discovered during construction, renovations and/or demolition, and it is suspected to contain asbestos, the Contractor must stop all work that may disturb the material. The Contractor shall advise the Owner of the discovery and await instructions from the owner.

A = Detail number
B = Drawing number where detailed

NO.	ISSUED	BY	DATE
2	ISSUED FOR CONVENIENCE	TA	APR 12, 2019
1	POST-TENDER ADDENDUM N0.1	TA	FEB 26, 2019
0	ISSUED FOR PERMIT & TENDER	TA	NOV 2, 2018

Orientation

Seal

Seal

UNIVERSITY of GUELPH
Design, Engineering & Construction
Physical Resources
Guelph, Ontario, N1G 2W1

Consultant
www.jlrichards.ca
J.L.Richards
ENGINEERS · ARCHITECTS · PLANNERS

Project
BUILDING #046
RENOVATIONS

Drawing Title
ELECTRICAL
PANEL SCHEDULES - 2 OF 4

Project No.
504034

Location
UNIVERSITY OF GUELPH
BUILDING #46

Scale: N.T.S.
Date: APR 12, 2019
Drawn by: SO
Checked By: HM
Approved By: HM
JLR #: 27915
Drawing No.: E34

Cad File No. ----

NEW PANEL "046 PP C1-1"

208/120V, 3PH, 4-WIRE
225A MAINS
SURFACE MOUNTED
10 KAIC

LOAD	DESCRIPTION	BKR	CCT	CCT	BKR	DESCRIPTION	LOAD
	LEVEL 1 CORR. LTG (C101, 101A)	15A, 1P	1	2	15A, 1P	LEVEL 1 LTG (113, 113A, 114, 114A, 115)	
	LEVEL 1 LTG (101, 102)	15A, 1P	3	4	15A, 1P	LEVEL 1 LTG (110, 111)	
	LEVEL 1 LTG (103, 103A)	15A, 1P	5	6	15A, 1P	LEVEL 1 LTG (109, 109A, 109B)	
	LEVEL 1 LTG (106, 106A, 106B, 107, 108)	15A, 1P	7	8	20A, 1P	EXTERIOR LIGHTING WING C / TIME CLOCK	
	SPARE	15A, 1P	9	10	15A, 1P		
	SPARE	15A, 1P	11	12	15A, 1P		
	SPARE	15A, 1P	13	14	15A, 1P	SPARE	
	SPARE	15A, 1P	15	16	15A, 1P	SPARE	
	SPARE	15A, 1P	17	18	15A, 1P	SPARE	
	SPACE		19	20		SPACE	
	SPACE		21	22		SPACE	
	SPACE		23	24		SPACE	
	SPACE		25	26		SPACE	
	SPACE		27	28		SPACE	
	SPACE		29	30		SPACE	
	SPACE		31	32		SPACE	
	SPACE		33	34		SPACE	
	SPACE		35	36		SPACE	
	SPACE		37	38		SPACE	
	SPACE		39	40		SPACE	
	SPACE		41	42		SPACE	

TOTAL CONNECTED LOAD: 0 WATTS

PHASE LOAD TO BE FILLED IN BY CONTRACTOR:
LOAD PHASE A: _____ LOAD PHASE B: _____ LOAD PHASE C: _____

REMARKS
1. ALL LOADS ARE IN WATTS, UNLESS OTHERWISE NOTED.
2. † DEDICATED NEUTRAL
3. ✱ GFI
4. ■ LOCKED

NEW PANEL "046 PP C1-2"

208/120V, 3PH, 4-WIRE
225A MAINS
RECESS MOUNTED
10 KAIC

LOAD	DESCRIPTION	BKR	CCT	CCT	BKR	DESCRIPTION	LOAD
	RECEPTACLES RM. 101, 102	15A, 1P	1	2	15A, 1P	RECEPTACLES RM. 102	
	RECEPTACLES RM. 115	20A, 1P	3	4	15A, 1P	RECEPTACLES RM. 114, 115	
	RECEPTACLES RM. 114	15A, 1P	5	6	15A, 1P	RECEPTACLES RM. 114	
	RECEPTACLES RM. 113A	15A, 1P	7	8	15A, 1P	RECEPTACLES RM. 112, 113	
	RECEPTACLES RM. 111	15A, 1P	9	10	15A, 1P	EF-44	
	EF-45	15A, 1P	11	12	15A, 1P	RECEPTACLES RM. 106A, 108	
	RECEPTACLES RM. 103, 103A	15A, 1P	13	14	20A, 1P	RECEPTACLES RM. C101	
	RECEPTACLES RM. 106B, 107	15A, 1P	15	16	15A, 1P	RECEPTACLES RM. 110	
	RECEPTACLES RM. 110, 110A	15A, 1P	17	18	15A, 1P	RECEPTACLES RM. 109, 109A	
	RECEPTACLES RM. 109A, 109B	15A, 1P	19	20	15A, 1P	CEILING JUNCTION BOX RM. 103	
	VAV BOXES	15A, 1P	21	22	15A, 1P	WATER FOUNTAIN RM. C101	
	CEILING JUNCTION BOX RM. 101	15A, 1P	23	24	15A, 1P	AUTOMATIC SINKS RM. WR104, WR104A	
	CEILING JUNCTION BOX RM. 101	15A, 1P	25	26	15A, 1P	CEILING JUNCTION BOX RM. 103	
	CEILING JUNCTION BOX RM. 101	15A, 1P	27	28	15A, 1P	CEILING JUNCTION BOX RM. 103	
	CEILING JUNCTION BOX RM. 111	15A, 1P	29	30	15A, 1P	SPARE	
	CEILING JUNCTION BOX RM. 111	15A, 1P	31	32	15A, 1P	SPARE	
	CEILING JUNCTION BOX RM. 111	15A, 1P	33	34	15A, 1P	SPARE	
	SPACE		35	36	15A, 1P	SPARE	
	SPACE		37	38	15A, 1P	SPARE	
	SPACE		39	40	20A, 1P	SPARE	
	SPACE		41	42	20A, 1P	SPARE	

NEW PANEL "046 PP C1-1X"

208/120V, 3PH, 4-WIRE
225A MAINS
RECESS MOUNTED
10 KAIC

LOAD	DESCRIPTION	BKR	CCT	CCT	BKR	DESCRIPTION	LOAD
	DOOR OPERATOR RM. WR104, C101A	15A, 1P	1	2	15A, 1P	LEVEL 1 CORR. LTG. (C101, C101A, 105)	
	EMERGENCY CALL STATION	15A, 1P	3	4	15A, 1P	EXIT LIGHTING (ALL EGRESS LEVEL 1 WING C)	
	SPARE	15A, 1P	5	6	15A, 1P	LEVEL 1 LTG (101, 102, 103, 106)	
	SPARE	15A, 1P	7	8	15A, 1P	LEVEL 1 LTG (109, 110, 111, 113A, 114)	
	SPARE	20A, 1P	9	10	15A, 1P	LEVEL 1 LTG & EF-46 (WR104)	
	SPARE	20A, 1P	11	12	15A, 1P	LEVEL 1 LTG & EF-47 (WR104A)	
	SPACE	20A, 1P	13	14	15A, 1P	EXTERIOR CANOPY LIGHTING / TIME CLOCK	
	SPACE	20A, 1P	15	16	15A, 1P	SPACE	
	SPACE		17	18		SPACE	
	SPACE		19	20		SPACE	
	SPACE		21	22		SPACE	
	SPACE		23	24		SPACE	
	SPACE		25	26		SPACE	
	SPACE		27	28		SPACE	
	SPACE		29	30		SPACE	

NEW PANEL "046 DP-2X"

120/208V, 3PH, 4-WIRE
400A MAINS
SURFACE MOUNTED
10 KAIC

LOAD	DESCRIPTION	BKR	CCT	CCT	BKR	DESCRIPTION	LOAD
	B1-1X	150A, 3P	1	2			
			3	4	150A, 3P	C1-1X	
			5	6			
	B2-2X	150A, 3P	7	8			
			9	10	??A, 2P	FIRE ALARM PANEL ■	(2)
			11	12		SPACE	
	SPD (3)	60A, 3P	13	14		SPACE	
			15	16		SPACE	
			17	18		SPACE	
	SPACE		19	20		SPACE	
	SPACE		21	22		SPACE	
	SPACE		23	24		SPACE	
	SPACE		25	26		SPACE	
	SPACE		27	28		SPACE	
	SPACE		29	30		SPACE	
	SPACE		31	32		SPACE	
	SPACE		33	34		SPACE	
	SPACE		35	36		SPACE	
	SPACE		37	38		SPACE	
	SPACE		39	40		SPACE	
	SPACE		41	42		SPACE	

NEW PANEL "046 DP-1E"

600V, 3PH, 3-WIRE
225A MAINS
SURFACE MOUNTED
35 KAIC

LOAD	DESCRIPTION	BKR	CCT	CCT	BKR	DESCRIPTION	LOAD
75 kVA	DP-2E VIA TX-1E	90A, 3P	1	2			
			3	4	20A, 3P	AC-1	
			5	6			
	AC-2	40A, 3P	7	8			
			9	10	40A, 3P	AC-6	
			11	12			
	RF-1	15A, 3P	13	14			
			15	16	15A, 3P	RF-2	
			17	18			
	RF-6	15A, 3P	19	20			
			21	22	15A, 3P	P-2A	
			23	24			
	P-1	15A, 3P	25	26			
			27	28	15A, 3P	P-5	
			29	30			
	P-1A	15A, 3P	31	32			
			33	34	15A, 3P	P-6	
			35	36			
	P-2	15A, 3P	37	38			
			39	40	20A, 3P	P-7	
			41	42			
(1)	ELEVATOR	35A, 3P	43	44			
			45	46	60A, 3P	SPD (3)	
			47	48			
	SPACE		49	50		SPACE	A6.37 ⚠
	SPACE		51	52		SPACE	A6.37 ⚠
	SPACE		53	54		SPACE	
	SPACE		55	56		SPACE	
	SPACE		57	58		SPACE	
	SPACE		59	60		SPACE	

NEW PANEL "046 DP-2E"

120/208V, 3PH, 4-WIRE
400A MAINS
SURFACE MOUNTED
22 KAIC

LOAD	DESCRIPTION	BKR	CCT	CCT	BKR	DESCRIPTION	LOAD
	PANEL U	100A, 3P	1	2			
			3	4	100A, 3P	PANEL BB	
			5	6			
	PANEL X	100A, 3P	7	8			
			9	10	100A, 3P	PANEL EX4	
			11	12			
	PANEL Y	100A, 3P	13	14	15A, 1P	FC-1	
			15	16			
			17	18	60A, 3P	SPD (3)	
⚠	HEAT EXCHANGER	15A, 1P	19	20			
	SPACE		21	22			
	SPACE		23	24		SPACE	
	SPACE		25	26		SPACE	
	SPACE		27	28		SPACE	
	SPACE		29	30		SPACE	
	SPACE		31	32		SPACE	
	SPACE		33	34		SPACE	
	SPACE		35	36		SPACE	
	SPACE		37	38		SPACE	
	SPACE		39	40		SPACE	
	SPACE		41	42		SPACE	

GENERAL NOTES:

A. KA RATINGS FOR PANELS ARE INDICATIVE. FINAL KA RATINGS SHALL BE VERIFIED AS PER ARC FLASH COORDINATION REPORT.

DRAWING NOTES

(1) COORDINATE BREAKER SIZE WITH ELEVATOR SHOP DRAWINGS.

(2) COORDINATE BREAKER SIZE WITH EXISTING FIRE ALARM PANEL REQUIREMENTS. BREAKER TO BE LOCKABLE AND PAINTED RED.

(3) COORDINATE BREAKER SIZE WITH SPD MANUFACTURER.

(4) STARTERS FOR MECHANICAL EQUIPMENT FOLLOWING DEMOLITION OF MCC-1 TO BE FED BY PANEL DP-2X. CONTRACTOR TO COORDINATE BREAKER SIZE REQUIREMENTS WITH EQUIPMENT ON SITE.

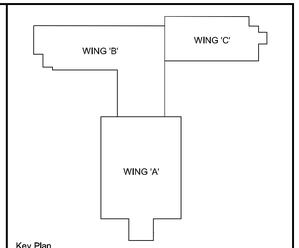

Key Plan

DO NOT SCALE DRAWINGS:

Contractors must check and verify all site conditions. Notify the Owner's Representative in writing before proceeding with the work if discrepancies are evident between the drawings and the site condition. No extras to the contract will be allowed if discrepancies were evident prior to start of work.

UNEXPECTED DISCOVERY OF ASBESTOS:

Where a friable material is discovered during construction, renovations and/or demolition, and it is suspected to contain asbestos, the Contractor must stop all work that may disturb the material. The Contractor shall advise the Owner of the discovery and await instructions from the owner.

(A/B) A = Detail number
B = Drawing number where detailed

NO.	ISSUED	BY	DATE
2	ISSUED FOR CONVENIENCE	TA	APR 12, 2019
1	POST-TENDER ADDENDUM N0.1	TA	FEB 26, 2019
0	ISSUED FOR PERMIT & TENDER	TA	NOV 2, 2018

Orientation

Seal

Seal

UNIVERSITY of GUELPH
Design, Engineering & Construction
Physical Resources
Guelph, Ontario. N1G 2W1

Consultant
www.jlrichards.ca
J.L.Richards
ENGINEERS · ARCHITECTS · PLANNERS

Project
BUILDING #046
RENOVATIONS

Drawing Title
ELECTRICAL
PANEL SCHEDULES - 3 OF 4

Project No.
504034

Location
UNIVERSITY OF GUELPH
BUILDING #46

Scale: AS INDICATED
Date: APR 12, 2019
Drawn by: SO
Checked By: HM
Approved By: HM
JLR #: 27915
Drawing No. E35

Cad File No. ----

GENERAL NOTES

1. CIRCUITS SHOWN IN EXISTING PANELS ARE BASED ON EXISTING PHYSICAL PANEL SCHEDULES FOUND ON SITE. CONTRACTOR VERIFY EXISTING LOADS PRIOR TO START OF WORK.

PANEL "046 PP A0-2"
OLD PANEL "R"
208/120V, 3PH, 4-WIRE
225A MAINS
SURFACE MOUNTED

LOAD	DESCRIPTION	BKR	CCT	CCT	BKR	DESCRIPTION	LOAD
	LIGHTS C5	20A, 1P	1	2	20A, 1P	RECEPTACLE	
	LIGHTS	20A, 1P	3	4	30A, 1P	RECEPTACLE	
	LIGHTS D4, D5	20A, 1P	5	6	20A, 1P	RECEPTACLE	
	LIGHTS C3, C4	20A, 1P	7	8	20A, 1P	RECEPTACLE	
	LIGHTS C2, D3	20A, 1P	9	10	20A, 1P	RECEPTACLE	
	LIGHTS C1, D2	20A, 1P	11	12	30A, 1P	RECEPTACLE	
	LIGHTS E6, E7	20A, 1P	13	14	20A, 1P	RECEPTACLE	
	LIGHTS	20A, 1P	15	16	20A, 1P	RECEPTACLE	
	LIGHTS	20A, 1P	17	18	20A, 1P	RECEPTACLE	
	LIGHTS H4	20A, 1P	19	20	20A, 1P	RECEPTACLE	
	LIGHTS E4, E5	20A, 1P	21	22	20A, 1P	RECEPTACLE	
	LIGHTS H3	20A, 1P	23	24	20A, 1P	RECEPTACLE	
	LIGHTS H2	20A, 1P	25	26	20A, 1P	RECEPTACLE	
	LIGHTS E1	20A, 1P	27	28	20A, 1P	RECEPTACLE	
	LIGHTS H1	20A, 1P	29	30	15A, 1P	RECEPTACLE	
	RECEPT STERILIZER	20A, 1P	31	32	20A, 2P	RECEPTACLE	
	2 & 1 RECEPT	20A, 1P	33	34			
	RECEPTACLES	20A, 1P	35	36	20A, 1P	RECEPTACLE	
	RECEPTACLES H2	20A, 1P	37	38	30A, 2P	OUTLET FOR DRYER	
	RECEPTACLES H1	20A, 1P	39	40			
	LIGHTS D1	20A, 1P	41	42	20A, 1P	LIGHTS E2, E3	

TOTAL CONNECTED LOAD: 0 WATTS

PHASE LOAD TO BE FILLED IN BY CONTRACTOR:
LOAD PHASE A: _____ LOAD PHASE B: _____ LOAD PHASE C: _____

REMARKS
1. ALL LOADS ARE IN WATTS, UNLESS OTHERWISE NOTED.
2. † DEDICATED NEUTRAL
3. ✳ GFI
4. ■ LOCKED

PANEL "046 PP A0-1"
OLD PANEL "P"
208/120V, 3PH, 4-WIRE
225A MAINS
SURFACE MOUNTED

LOAD	DESCRIPTION	BKR	CCT	CCT	BKR	DESCRIPTION	LOAD
	LIGHTS, UNIT HEATER	20A, 1P	1	2	20A, 1P	LIGHTS A4	
	LIGHTS A5	20A, 1P	3	4	20A, 1P	LIGHTS B5, B6	
	LIGHTS B7, 8	20A, 1P	5	6	20A, 1P	LIGHTS A2, A3	
	LIGHTS B1	20A, 1P	7	8	20A, 1P	LIGHTS	
	LIGHTS	20A, 1P	9	10	20A, 1P	LIGHTS FEED KITCHEN	
	LIGHTS	20A, 1P	11	12	20A, 1P	LIGHTS B2	
	3 RECEPTACLES	20A, 1P	13	14	20A, 1P	RECEPTACLE	
	RECEPTACLE	20A, 1P	15	16	20A, 1P	RECEPTACLE B2	
	RECEPTACLE B7	20A, 1P	17	18	20A, 1P	4 RECEPTACLES B1	
	RECEPTACLE	20A, 1P	19	20	20A, 1P	B7 RECEPTACLE C6	
	RECEPTACLE B5	20A, 1P	21	22	20A, 1P	RECEPTACLE C5	
	RECEPTACLE	20A, 1P	23	24	20A, 1P	RECEPTACLE	
	3 RECEPTACLES	20A, 1P	25	26	20A, 1P	C3 RECEPTACLE	
	3 RECEPTACLES	20A, 1P	27	28	20A, 1P	RECEPTACLE	
	3 RECEPTACLES	20A, 1P	29	30	20A, 1P	RECEPTACLE	
	ENTRANCE HEATER	20A, 1P	31	32	20A, 1P	2 RECEPTACLE	
	3 RECEPTACLES	20A, 1P	33	34	20A, 1P	2 RECEPTACLE	
	3 RECEPTACLES	20A, 1P	35	36	20A, 1P	2 RECEPTACLE	
	RECEPTACLE	20A, 1P	37	38	15A, 1P	AERCO WATER WIZARD	
	KITCHEN	20A, 1P	39	40	15A, 1P	RECEPT COMPRESSOR ROOM	
	3 UNIT HEATERS	20A, 1P	41	42	20A, 1P	2 RECEPT. FANS	

PANEL "046 PP A0-3"
OLD PANEL "T"
208/120V, 3PH, 4-WIRE
225A MAINS
SURFACE MOUNTED

LOAD	DESCRIPTION	BKR	CCT	CCT	BKR	DESCRIPTION	LOAD
	FEED FOR FAN CONTROL PANEL	15A, 1P	1	2	15A, 1P	E WING CORRIDOR 4 RECEPTACLES	
	SPARE	15A, 1P	3	4	15A, 1P	CLEAN CORRIDOR A ROOMS RECEPTACLES	
	SPARE	15A, 1P	5	6	15A, 1P	CLEAN CORRIDOR B1 RECEPTACLES	
	SPARE	15A, 1P	7	8	15A, 1P	2 RECEPTACLES	
	SPARE	15A, 1P	9	10	15A, 1P	LADIES CHANGE ROOM / STORAGE ROOM	
	3 RECEPTACLES	15A, 1P	11	12	15A, 1P	SECURITY ACCESS CONTROL	
	SPARE	15A, 1P	13	14	15A, 1P	LIGHTS	
	RECEPTACLE	15A, 1P	15	16	15A, 1P	LIGHTS	
	SPARE	15A, 1P	17	18	15A, 1P	LIGHTS	
	RECEPTACLE	15A, 1P	19	20	15A, 1P	WALL LIGHTS	
	JOHNSON CONTROL	15A, 1P	21	22	15A, 1P	LIGHTS	
	COOLING TOWER FAN	15A, 1P	23	24	15A, 1P	LIGHTS	
	LIGHTS	15A, 1P	25	26	15A, 1P	3 UNIT HEATERS	
	LIGHTS	15A, 1P	27	28	15A, 1P	3 UNIT HEATERS	
	LIGHTS	15A, 1P	29	30	40A, 2P	SPARE	
	POWER CONTROL	15A, 1P	31	32			
	SPARE	40A, 2P	33	34	15A, 1P	RECEPT	
			35	36	15A, 1P	RECEPT	
	RM 133	15A, 3P	37	38	15A, 1P	RECEPT	
			39	40	20A, 2P	TIME CLOCK	
			41	42			

PANEL "046 PP A0-1E"
OLD PANEL "U"
208/120V, 3PH, 4-WIRE
225A MAINS

LOAD	DESCRIPTION	BKR	CCT	CCT	BKR	DESCRIPTION	LOAD
	???	15A, 1P	1	2	15A, 1P	???	
	???	20A, 1P	3	4	15A, 1P	LIGHTS	
	???	15A, 1P	5	6	20A, 1P	CORR 174 BIO ROOMS	
	BIO ROOMS	20A, 1P	7	8	15A, 1P	LIGHTS	
	???	20A, 1P	9	10	15A, 1P	LIGHTS	
	EG HALL	20A, 1P	11	12	15A, 1P	LIGHTS / RECEPT	
	LIGHTS	20A, 1P	13	14	15A, 1P	LIGHTS	
	LIGHTS	15A, 1P	15	16	15A, 1P	LIGHTS	
	LIGHTS	20A, 1P	17	18	20A, 1P	SEWAGE ROOM	
	CORRIDOR	15A, 1P	19	20	15A, 1P	FANS HORSEFALL 2	
	LIGHTS	15A, 1P	21	22	15A, 1P	RECS HORSEFALL 2	
	LIGHTS	15A, 1P	23	24	15A, 1P	RECS HORSEFALL 2	
	???	30A, 3P	25	26	15A, 1P	RECS	
			27	28	15A, 1P	HORSEFALL #1 BOOSTER FAN	
			29	30	20A, 1P	CORR 153 AND BIO ROOMS	

GENERAL NOTES

A. PANEL SCHEDULES HAVE BEEN PRODUCED FROM SITE PHOTOS. CONTRACTOR TO CONFIRM BREAKER REQUIREMENTS WHEN REPLACING EXISTING PANELS.

B. CONTRACTOR TO PROVIDE LAMACOID LABELS ON NEW PANELS INDICATED OLD AND NEW PANEL NAMES.

C. KA RATINGS FOR PANELS ARE INDICATIVE. FINAL KA RATINGS SHALL BE VERIFIED AS PER ARC FLASH COORDINATION REPORT.

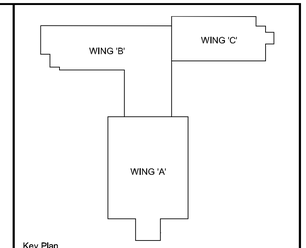

Key Plan

DO NOT SCALE DRAWINGS:

Contractors must check and verify all site conditions. Notify the Owner's Representative in writing before proceeding with the work if discrepancies are evident between the drawings and the site condition. No extras to the contract will be allowed if discrepancies were evident prior to start of work.

UNEXPECTED DISCOVERY OF ASBESTOS:

Where a friable material is discovered during construction, renovations and/or demolition, and it is suspected to contain asbestos, the Contractor must stop all work that may disturb the material. The Contractor shall advise the Owner of the discovery and await instructions from the owner.

A = Detail number
B = Drawing number where detailed

NO.	ISSUED	BY	DATE
1	ISSUED FOR CONVENIENCE	TA	APR 12, 2019
0	ISSUED FOR PERMIT & TENDER	TA	NOV 2, 2018

Orientation

Seal

Seal

UNIVERSITY of GUELPH
Design, Engineering & Construction
Physical Resources
Guelph, Ontario. N1G 2W1

Consultant
www.jlrichards.ca
J.L.Richards
ENGINEERS · ARCHITECTS · PLANNERS

Project
BUILDING #046
RENOVATIONS

Drawing Title
ELECTRICAL
PANEL SCHEDULES - 4 OF 4

Project No.
504034

Location
UNIVERSITY OF GUELPH
BUILDING #46

Scale: N.T.S.
Date: APR 12, 2019
Drawn by: SO
Checked By: HM
Approved By: HM
JLR #: 27915
Drawing No.: E36

Cad File No. ----